JEWISH HOME FOR THE AGING
IN RESEDA, CALIFORNIA

SENIOR HOUSING PROJECT



WWC OT
Widom Wein Cohen O'Leary Terasawa

3130 Wilshire Boulevard
Sixth Floor
Santa Monica, California 90403
T (310) 828-0040
F (310) 453-9432
www.wwcot.com

Inland Empire
Palm Springs
Moorpark
Shanghai, China

RECEIVED
10:08 am, Aug 14, 2008
FRAMEMAX

Building Department Submittal: June 1, 2007
Issued For Bid: _____
Issued For Construction: _____

PROJECT GENERAL NOTES

1. THE PROJECT MANUAL SHALL BE USED TOGETHER WITH THESE DRAWINGS; PROJECT CONTRACT DOCUMENTS ARE COMPLEMENTARY

2. TOPOGRAPHIC SURVEY DRAWINGS, IF INCLUDED IN THIS SET, ARE FOR INFORMATIONAL PURPOSES ONLY.

3. THE TOPOGRAPHIC PLAN REPRESENTS, TO THE BEST KNOWLEDGE OF THE ARCHITECT AND OWNER, THE EXISTING CONDITIONS ABOVE AND BELOW GRADE AT THE TIME OF BID. HOWEVER, THE ARCHITECT AND OWNER CANNOT GUARANTEE THE ACCURACY AND COMPLETENESS OF THE SURVEY INFORMATION SHOWN. CONTRACTOR SHALL CONDUCT FIELD OBSERVATIONS, TEST PITS, SURVEYS, PROBES, AND OTHER RESEARCH AS NECESSARY TO VERIFY ACTUAL FIELD CONDITIONS. PERFORM SUCH RESEARCH UNDER SCHEDULE AND CONDITIONS APPROVED IN ADVANCE BY THE OWNER.

4. THE CONTRACTOR SHALL MAINTAIN PROPER ACCESS FOR FIRE DEPARTMENT VECHICLES AND EQUIPMENT AT ALL TIMES. ANY CHANGES MADE TO FIRE DEPARTMENT ACCESS ROUTES SHALL BE REVIEWED BY FIRE DEPARTMENT AUTHORITIES HAVING JURISDICTION PRIOR TO CHANGING ACCESS ROUTING.

5. THE CONTRACTOR SHALL SECURE ALL NECESSARY PERMITS AND NOTIFY THE PROPER AUTHORITIES HAVING JURISDICTION OVER THE WORK PRIOR TO STARTING. SAID PERMITS AND CERTIFICATIONS SHALL BE KEPT ON THE SITE AT ALL TIMES.

6. PRIOR TO START OF WORK, THE CONTRACTOR SHALL CAREFULLY INSPECT AND VERIFY ALL CONDITIONS SHOWN ON THE CONTRACT DRAWINGS. IF WORK CAN NOT BE PERFORMED AS SHOWN, THE CONTRACTOR SHALL NOTIFY THE CONSTRUCTION MANAGER IMMEDIATELY. WORK PERFORMED AFTER SUCH DISCOVERY, UNLESS AUTHORIZED BY THE CONSTRUCTION MANAGER, SHALL BE DONE AT THE CONTRACTOR'S RISK.

7. THE CONTRACTOR SHALL NOT INTERRUPT EXISTING UTILITIES SERVING EXISTING FACILITIES, EXCEPT WHEN AUTHORIZED IN WRITING BY THE OWNER AND ALL AUTHORITIES HAVING JURISDICTION. PROVIDE TEMPORARY SERVICES DURING CONSTRUCTION ACTIVITIES ACCEPTABLE TO OWNER AND GOVERNING AUTHORITIES. (PROVIDE 14 DAYS ADVANCE NOTICE).

8. THE WORK SHALL INCLUDE ALL REMOVALS NOT SPECIFICALLY INDICATED ON DRAWINGS BUT NECESSARY FOR THE COMPLETION OF THE WORK.

9. THE CONTRACTOR SHALL COORDINATE ANY AND ALL REQUIREMENTS FOR OFF SITE IMPROVEMENTS INCLUDING, BUT NOT LIMITED TO SIDEWALKS, DRIVEWAYS, CURBS, GUTTERS, UTILITIES, ETC.. OFF-SITE IMPROVEMENTS SHALL MEET THE REQUIREMENTS OF THE AUTHORITY HAVING JURISDICTION.

10. THE CONTRACTOR SHALL PROVIDE PROTECTIVE BARRICADES WHERE REQUIRED DURING CONSTRUCTION.

11. THE CONTRACTOR SHALL KEEP ALL EXITS READILY ACCESSIBLE AND UNOBSTRUCTED AT ALL TIMES.

12. ELEVATIONS ARE TO TOP OF CONCRETE, NOT TO TOP OF FLOOR COVERING OR ROOFING.

13. WHEN A DETAIL IS IDENTIFIED AS TYPICAL, THE CONTRACTOR SHALL APPLY THIS DETAIL TO EVERY LIKE CONDITION WHETHER OR NOT THE REFERENCE IS REPEATED IN EVERY INSTANCE.

14. THE SIZES, LOCATION FOR MOUNTINGS AND ATTACHMENTS AND LOCATIONS OF UTILITY CONNECTIONS FOR EACH ITEM OF EQUIPMENT SHOWN ON THE DRAWINGS ARE FOR ILLUSTRATION ONLY. ALL CAN VARY FROM MANUFACTURER TO MANUFACTURER AND ARE DEPENDENT ON THE EXACT MANUFACTURER'S MODEL FURNISHED. THE CONTRACTOR SHALL PROVIDE AND COORDINATE EXACT DIMENSIONS RELATING TO THE SIZE OF EACH ITEM OF EQUIPMENT, THE LOCATIONS OF ALL MOUNTINGS AND ATTACHMENTS FOR EACH ITEM OF EQUIPMENT AND FOR ALL UTILITY CONNECTIONS TO EACH ITEM OF EQUIPMENT.

15. THE CONTRACTOR SHALL PROVIDE AND COORDINATE THE EXACT DIMENSIONS, SIZES AND POSITIONS OF ALL OPENINGS IN FLOOR AND WALL CONSTRUCTION NECESSARY FOR THE INSTALLATION OF THE WORK.

16. ALL WOOD USED FOR BLOCKING, NAILERS AND / OR FRAMING USED FOR PERMANENT CONSTRUCTION SHALL BE FIRE RETARDANT PRESSURE TREATED AND SHALL BEAR AN APPROVED INSPECTION AGENCY LABEL.

17. ALL PIPING AND DUCT WORK VALVES, DAMPERS, CONTROLS AND TERMINATION SHALL BE INSTALLED AT LOCATIONS WHICH PROVIDE SAFE, DIRECT AND EASY ACCESS. REQUIREMENT FOR ACCESS PANELS TO BE LOCATED WITHIN 12" FROM VALVE, CONTROL, DAMPERS, DEVICE, ETC. AND COORDINATED WITH THE OWNER.

18. PROVIDE LABELS ON DOORS, FRAMES AND OTHER ASSEMBLIES AT OPENINGS IN FIRE RATED CONSTRUCTION.

19. THE INTENT OF THE DRAWINGS AND SPECIFICATIONS IS TO EXECUTE THE WORK IN ACCORDANCE WITH TITLE 24, CALIFORNIA CODE OF REGULATIONS. SHOULD ANY CONDITIONS DEVELOP NOT COVERED BY THE CONTRACT DOCUMENTS WHEREIN THE FINISHED WORK WILL NOT COMPLY WITH SAID TITLE 24, CALIFORNIA CODE OF REGULATIONS, A PROPOSED CHANGE ORDER (PCO) DETAILING AND SPECIFYING THE REQUIRED WORK SHALL BE SUBMITTED TO AND APPROVED BY DSA BEFORE PROCEEDING WITH THE WORK.

PROJECT DIRECTORY

PROJECT ADDRESS
JEWISH HOME FOR THE AGING
6440 WILBUR AVE.
RESEDA, CALIFORNIA 91335

CLIENT
LA JEWISH HOME FOR THE AGING
7150 TAMPA AVE.
RESEDA, CALIFORNIA 91335
CONTACT: TIM MCGLEW
T (818) 774-3325 F (818) 774-3020

ARCHITECT
WWCOT (WIDOM WEIN COHEN O'LEARY TERASAWA)
3130 WILSHIRE BOULEVARD, SIXTH FLOOR
SANTA MONICA, CALIFORNIA 90403
CONTACT: TOM CESTARTE
T (310) 828-0040 F (310) 453-9432

PROJECT MANAGER
ANTHONY MASON ASSOCIATES
11766 WILSHIRE BOULEVARD, SUITE 470
LOS ANGELES, CALIFORNIA 90025
CONTACT: ANTHONY MASON
T (310) 312-6603 F (310) 312-2982

CONTRACTOR
SUFFOLK CONSTRUCTION
38 DISCOVERY, SUITE 200
IRVINE, CA 92618
CONTACT: GREG HESCOCK
T (949) 585-3055 F (949) 453-9495

MARKETING
NEW LIFE MANAGEMENT& DEVELOPMENT, INC.
650 FOOTHILL BLVD., SUITE C
LA CANADA, CA 91011
CONTACT: MARY P. MCMULLIN
T (818) 790-2578 F (818) 790-2648

LANDSCAPE ARCHITECT
AHBE LANDSCAPE ARCHITECTS
8729 WASHINGTON BOULEVARD
CULVER CITY, CA 90232
CONTACT: KIKU KURAHASHI
T (310) 838-0448 F (310) 204-2664

CIVIL ENGINEER
DIAMOND WEST ENGINEERING, INC.
26800 AGOURA ROAD, SUITE 100
CALABASAS, CA 91301
CONTACT: ELI YOMTOV
T (818) 444-1800 F (818) 223-9215

STRUCTURAL ENGINEER
STRUCTURAL FOCUS
1005 WEST 190TH ST.
GARDENA, CA 90248
CONTACT: RUSSELL KEHL
T (310) 323-9924 F (310) 323-9925

MECHANICAL/ELECTRICAL/PLUMBING ENGINEER
GOTAMA BUILDING ENGINEERS, INC.
13180 MINDANAO WAY
MARINA DEL REY, CA 90292
CONTACT: ERIC SOLADAY
T (310) 827-3332 F (310) 822-5511

FOOD SERVICES CONSULTANT
LASCHOBER+SOVICH
20315 VENTURA BOULEVARD WOODCOURT, SUITE D
WOODLAND HILLS, CA 91367
CONTACT: LARRY LANIER
T (818) 713-9011 F (818) 713-1104

SPECIFICATIONS
PRO-SPEC ASSOCIATES
681 SOUTH STAGE ROAD
MEDFORD, OR 97501
T: (541) 245-4110 F: (541)245-4109
CONTACT: LORI LORENZ

TELE/DATA
PLANNET CONSULTING
2850 SATURN STREET, SUITE 100
BREA, CA 92821
CONTACT: MONTY PEARSON
T (714) 982-5822 F (714) 982-5823

AUDIO VISUAL
PLANNET CONSULTING
11999 SAN VICENTE BLVD. SUITE 340
BRENTWOOD, CA 90049
CONTACT: ERIC LOCKWOOD
T (310) 566-0218 F (310) 566-0219

DEFERRED APPROVAL NOTES:
INSTALLATION OF THE FOLLOWING DEFERRED APPROVAL ITEMS SHALL NOT BEGIN UNTIL CONTRACTOR'S DETAILED DRAWINGS, SPECIFICATIONS AND ENGINEERING CALCULATIONS FOR THE ACTUAL SYSTEMS TO BE INSTALLED ARE ACCEPTED AND SIGNED BY THE ARCHITECT OR STRUCTURAL ENGINEER AND APPROVED BY ALL LOCAL AND STATE GOVERNMENT HAVING JURISDICTION ON THIS PROJECT:

DIVISION 14 ELEVATOR GUIDE RAILS / ATTACHMENTS

DIVISION 15 FIRE SPRINKLER SYSTEM (ABOVEGROUND)

COMPLETE SUBMITTALS:
THE FOLLOWING WORK IS PART OF THE CONTRACT AND IS INCLUDED IN THESE DOCUMENTS:

DIVISION 2 UNDERGROUND FIRE PROTECTION PIPING SYSTEM

DIVISION 11 KITCHEN SUPPRESSION SYSTEM

DIVISION 15 CLASS 1 STANDPIPE SYSTEM & TEMPORARY STANDPIPE SYSTEM (ABOVEGROUND PIPING)

DIVISION 16 FIRE ALARM SYSTEM

DEFERRED APPROVALS

POWER: SOUTHERN CALIFORNIA EDISON
1924 CASHDAN STREET
COMPTOM, CA 90220
PH.: (310) 608-5153
FAX: (310) 608-5033
CONTACT: FRANK FRAZER

GAS: SEMPRA UTILITIES
3124 W. 36TH STREET
LOS ANGELES, CA 90018-3605
PH.: (310) 605-4121
CONTACT: PAT IGOE

WATER: GOLDEN WEST WATER CO
REGION II
1920 WEST COORPORATE WAY
ANAHEIM, CA 92801
PH.: (714) 535-7711
FAX: (714) 535-8701
CONTACT: EMMA MAXEY

DIGALERT
PH: (800) 227-2600

SEWER: COUNTY SANITATION DISTRICT
900 SOUTH FREEMONT AVE.
ALHAMBRA, CA. 91803

OFF SITE: LA COUNTY DPW
900 SOUTH FREEMONT AVE.
ALHAMBRA, CA. 91803
PH:(626) 458-3820
CONTACT: ROBIN CRUZ

FIRE: FIRE PREVENTION
5823 RICKENBACKER RD.
COMMERCE, CA.
PH:(323) 890-4125
CONTACT: BERNARD MCDUEL

TELEPHONE:
SBC

STORM DRAINS: LOS ANGELES COUNTY DPW
PERMITS AND SUBDIVISIONS.
CONSTRUCTION DIVISION
8TH FLOOR
900 S. FREEMONT AVE.
ALHAMBRA, CA. 91803

UTILITIES DIRECTORY

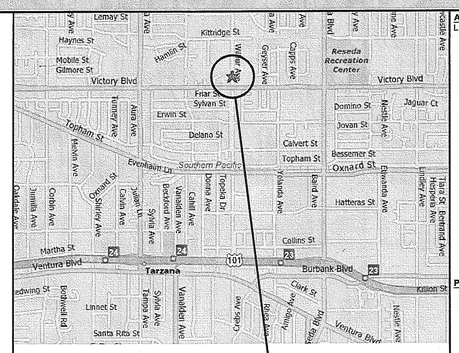
Lemay St
Kittridge St
Haynes St
Hamlin St
Mobile St
Gilmore St
Victory Blvd
Reseda Recreation Center
Friar St
Sylvan St
Erwin St
Delano St
Calvert St
Topham St
Bessemer St
Oxnard St
Hatteras St
Collins St
Burbank Blvd
Martha St
Ventura Blvd
Tarzana
Linnet St
Santa Rita St
Clark St
Ventura Blvd
Southern Pacific
Evenham Ln
Tobias Ave
Corbin Ave
Crebs Ave
Cohasset St
Lockford Ave
Cahill Ave
Vanalden Ave
Sylvia Ave
Tampa Ave
Reseda Blvd
Lindley Ave
Jovan St
Domino St
Jaguar Ct
Merlin Ave
Hesperia Ave
Tiara St
Etiwanda Ave
Lindley Ave
Haskell Ave
Yolanda Ave
Topham St
Jordan Ave
Corbin Ave
Zelzah Ave
Alabama Ave
Tampa Ave
Bonsall Ave
Bedford Pl
Orcas Ave
Rinaldi St
Ingelside Ave
Tobias Ave
Portola Dr
Donna Ave
Calvin

Los Angeles City Planning Commission

200 North Spring Street, Room 532, City Hall, Los Angeles, CA 90012
www.cityofla.org/PLN/index.htm

Determination Mailing Date: JUN 24 2005

Department of Building and Safety
201 N. Figueroa Street
Counter B, Fourth Floor

Applicant: L.A. Jewish Home for the Aging, Ms Molly Forrest, Chief Executive Officer

CASE NO. CPC 2004-7469 CU
Conditional Use Permit
CEQA: ENV 2004-7469-MND
Location: 18855 W. Victory Boulevard
Council District: 3
Plan Area: Reseda - West Van Nuys
Plan Land Use: Low
Zone: RA-1
District Map: 177B121

At its meeting on May 27, 2005, the following action was taken by the City Planning Commission:

1. Approved a Conditional Use per Section 12.24.U.12 for a 114 bed assisted living facility with the attached conditions of approval;
2. Approved the requested Site Plan Review determination pursuant to Section 16.05 of the LAMC, subject to the attached conditions of approval.
3. Approved and recommend that the City Council adopt Mitigated Negative Declaration 2004-7469-MND.
4. Adopted the attached Findings.
5. Advise the applicant that pursuant to State Fish and Game Code Section 711.4, a Fish and Game Fee and / or Certificate of Fee Exemption is now required to be submitted to the County Clerk prior to or concurrent with the Environmental Notice of Determination (NOD) filing.

Fiscal Impact Statement: There is no General Fund impact as administrative costs are recovered through fees.

This action was taken by the following vote:

Moved: Chang
Seconded: Atkinson
Ayes: Burg, Cardenas, Cline, George, Mahdesian
Absent: Mindlin, Schiff
Vote: 7-0

Gabriela Williams, Commission Executive Assistant II
City Planning Commission

CASH ADC ADD CK DL DV
JUN 30 2005
TC RD JG VB TS DT BJ
ACCT. FILE

Effective Date / Appeals: The Commission's determination will be final 15 days from the mailing date of this determination unless an appeal is filed to the City Council within that time. All appeals shall be filed on forms provided at the Planning Department's Public Counters at 201 N. Figueroa Street, Fourth Floor, Los Angeles, or at 6262 Van Nuys Boulevard, Suite 251, Van Nuys.

The time in which a party may seek judicial review of this determination is governed by California Code of Civil Procedure Section 1094.6. Under that provision, a petitioner may seek judicial review of any decision of the City pursuant to California Code of Civil Procedure Section 1094.5, only if the petition for writ of mandate pursuant to that section is filed no later than the 90th day following the date on which the City's decision becomes final.

Attachments: Findings, Conditions,

c: Notification

Conditional Use/Site Plan Review
Conditions of Approval

1. **Entitlement.** The use and development of the subject property shall be in substantial conformance with the site plan and elevations labeled Exhibit "E-3" and dated April 8, 2005, attached to the file. Deviations may be allowed in order to comply with provisions of the Municipal Code.

1. **Use limitations:** The use and development permitted per this approval shall be limited to a 114 unit assisted living facility.

2. **Height:** Any occupied space shall be limited to four stories, not to exceed 45-feet in height. Architectural features shown on the elevations shall be limited to 57-feet in height

3. **Parking:** The site shall provide 120 parking spaces assigned to the 114 unit facility. The 120 parking spaces shall not be used to satisfy any required parking requirements for any other use on site.

4. **Access:** A pick-up and drop-off driveway shall be permitted along Wilbur Avenue.

5. **Setback:** The new structure shall maintain a 20-foot setback along Wilbur Avenue.

6. **Traffic Study:** Prior to the remodeling or demolition and reconstruction of any other use on the site, the applicant shall submit a traffic study approved by the Department of Transportation. The Traffic Study shall be for the rehabilitation of the entire site.

Environmental:

7. **Landscaping:** All open areas not used for buildings, driveways, parking areas, recreational facilities or walks shall be attractively landscaped and maintained in accordance with a landscape plan, including an automatic irrigation plan, prepared by a licensed landscape architect to the satisfaction of the Planning Department.

8. **Graffiti:** The owners shall maintain the subject property clean and free of debris and rubbish and to promptly remove any graffiti from the walls, pursuant to Municipal Code Sections 91.8101-F, 91.8904-1 and 91.1707-E. Exterior walls of new commercial and residential buildings of other than glass may be covered with clinging vines, screened by oleander trees or similar vegetation capable of covering or screening entire walls up to heights of at least 9-feet, excluding windows and signs.

9. **Lighting:** Outdoor lighting shall be designed and installed with shielding, so that the light source cannot be seen from adjacent residential properties.

11. **Air Pollution:** The applicant shall install air filtration system(s) to reduce the diminished air quality effects on occupants of the project.

12. **Erosion/Grading/Short-Term construction Impacts:** The applicant shall comply with the following:

a. All unpaved demolition and construction areas shall be wetted at least twice daily during excavation and construction, and temporary dust covers shall be used to reduce dust emissions and meet SCAQMD District Rule 403. Wetting could reduce fugitive dust by as much as 50 percent.
b. The owner or contractor shall keep the construction area sufficiently dampened to control dust caused by construction and hauling, and at all times provide reasonable control of dust caused by wind.
c. All loads shall be secured by trimming, watering or other appropriate means to prevent spillage and dust.
d. All materials transported off-site shall be either sufficiently watered or securely covered to prevent excessive amount of dust.
e. All clearing, earth moving, or excavation activities shall be discontinued during periods of high winds (i.e., greater than 15 mph), so as to prevent excessive amounts of dust.
f. General contractors shall maintain and operate construction equipment so as to minimize exhaust emissions.

Noise

g. The project shall comply with the City of Los Angeles Noise Ordinance No. 144,331 and 161,574, and any subsequent ordinances, which prohibit the emission or creation of noise beyond certain levels at adjacent uses unless technically infeasible.
h. Construction and demolition shall be restricted to the hours of 7:00 am to 6:00 pm Monday through Friday, and 8:00 am to 6:00 pm on Saturday.
i. Construction and demolition activities shall be scheduled so as to avoid operating several pieces of equipment simultaneously, which causes high noise levels.
j. The project contractor shall use power construction equipment with state-of-the-art noise shielding and muffling devices.
k. The project sponsor must comply with the Noise Insulation Standards of Title 24 of the California Code Regulations, which insure an acceptable interior noise environment.

General Construction

l. All waste shall be disposed of properly. Use appropriately labeled recycling bins to recycle construction materials including: solvents, water-based paints, vehicle fluids, broken asphalt and concrete, wood, and vegetation. Non recyclable materials/wastes must be taken to an appropriate landfill. Toxic wastes must be discarded at a licensed regulated disposal site.
m. Clean up leaks, drips and spills immediately to prevent contaminated soil on paved surfaces that can be washed away into the storm drains.
n. Do not hose down pavement at material spills. Use dry cleanup methods whenever possible.
o. Cover and maintain dumpsters. Place uncovered dumpsters under a roof or cover with tarps or plastic sheeting.
p. Use gravel approaches where truck traffic is frequent to reduce soil compaction and limit the tracking of sediment into streets.
q. Conduct all vehicle/equipment maintenance, repair, and washing away from storm drains. All major repairs are to be conducted off-site. Use drip pans or drop clothes to catch drips and spills.

13. **Liquefaction:** The applicant shall comply with the Uniform Building Code Chapter 18, Division I Section 1804.5 Liquefaction Potential and Soil Strength Loss which requires the preparation of a

geotechnical report. The geotechnical report shall assess potential consequences of any liquefaction and soil strength loss, estimation of settlement, lateral movement or reduction in foundation soil-bearing capacity, and discuss mitigation measures that may include building design consideration. Building design considerations may include, but are not limited to: ground stabilization, selection of appropriate foundation type and depths, selection of appropriate structural systems to accommodate anticipated displacements or any combination of these measures.

14. **Explosion/Release (Asbestos Containing Materials):** Prior to the issuance of the demolition permit, the applicant shall provide a letter to the Department of Building and Safety from a qualified asbestos abatement consultant that no ACM are present in the building. If ACM are found to be present, it will need to be abated in compliance with the South Coast Air Quality Management District's Rule 1403 as well as all other state and federal rules and regulations.

15. **Run-off:** The applicant shall incorporate stormwater pollution control measures. Ordinance No. 172,176 and Ordinance No. 173,494 specify Stormwater and Urban Runoff Pollution Control which requires the application of Best Management Practices (BMPs). Chapter IX, Division 70 of the Los Angeles Municipal Code addresses grading, excavations, and fills.

16. **Public Services (Fire):** The applicant shall submit a plot plan for approval by the Fire Department either prior to the recordation of a final map or the approval of a building permit. The plot plan shall include the following minimum design features: fire lanes, where required, shall be a minimum of 20 feet in width; all structures must be within 300 feet of an approved fire hydrant, and entrances to any dwelling unit or guest room shall not be more than 150 feet in distance in horizontal travel from the edge of the roadway of an improved street or approved fire lane.

17. **Driveway:** The applicant shall submit a parking and driveway plan, that incorporates design features that shall reduce accidents, to the Bureau of Engineering and the Department of Transportation for approval.

18. **Utilities (Solid Waste):** Recycling bins shall be provided at appropriate locations to promote recycling of paper, metal, glass, and other recyclable material.

Administrative:

19. **Code Compliance.** Area, height and use regulations of the RA-1 zoning classification of the subject property shall be complied with, except where herein conditions are more restrictive.

20. **Covenant.** Prior to the issuance of any permits relative to this matter, an agreement concerning all the information contained in these conditions shall be recorded in the County Recorder's Office. The agreement shall run with the land and shall be binding on any subsequent property owners, heirs or assign. The agreement must be submitted to the Planning Department for approval before being recorded. After recordation, a copy bearing the Recorder's number and date shall be provided to the Planning Department for attachment to the file.

21. **Definition.** Any agencies, public officials or legislation referenced in these conditions shall mean those agencies, public officials, legislation or their successors, designees or amendment to any legislation.

22. **Enforcement.** Compliance with these conditions and the intent of these conditions shall be to the satisfaction of the Planning Department and any designated agency, or the agency's successor and

in accordance with any stated laws or regulations, or any amendments thereto.

23. **Building Plans.** Page 1 of the grants and all the conditions of approval shall be printed on the building plans submitted to the City Planning Department and the Department of Building and Safety.

FINDINGS

1. **General Plan Land Use Designation.** The subject property is located within the area covered by the Reseda - West Van Nuys Community Plan, updated and adopted by the City Council on November 17, 1999. The plan designates the property for Low density residential (R1,RS, RE9, RU, RD6 and RD5). The requested Conditional Use is a permitted use within the Low plan designation.

2. **Conditional Use** findings pursuant to Municipal Code Section 12.24 E:

That the proposed location will be desirable to the public convenience or welfare, is proper in relation to adjacent uses or the development of the community, will not be materially detrimental to the character of development in the immediate neighborhood, and will be in harmony with the various elements and objectives of the General Plan.

a. The location of the project will be desirable to the public convenience and welfare.

The subject site contains a special care facility providing retirement and medical services for senior citizens. The site is located at the intersection of a Major and Secondary Highway buffered from existing residential development by a flood control channel and a Los Angeles Department of Water and Power easement.

This site has been used since 1983 as a sanatarium and hospital. The existing special care facility is operating at capacity with demands for its services increasing. Presently, there are 8 buildings, 213,227 square feet of floor area, 562 beds and 245 on-site parking spaces. The project will provide 114 dwelling units with a mix of 69 one-bedroom and 45 two-bedroom residences. 120 additional on-site parking spaces will be provided and the structure can be accommodated on the site while leaving sufficient area for open space and gardens.

b. The proposed project will be proper in relation to adjacent uses and the development of the community.

The location of hospitals; special care facilities; and, retirement homes with accessory services, in residential areas, is common and accepted as an expected land use. In this fashion, the services provided can be placed adjacent to their client base and their families. The construction, use and maintenance of the facility will accommodate the need for new assisted living units for approximately 159 persons.

c. The proposed project will not be detrimental to the character of development in the immediate neighborhood and will be in harmony with the various elements and objectives of the General Plan.

The project will upgrade and maintain an existing use which has operated at the site for over 30 years. The general area is developed with single-family residential uses, the low rise assisted living facility blends with low scale character of the area and the low intensity of the uses. The traffic generated from the use will be minimal due to the fact the residents seldom drive or own vehicles. A preliminary traffic analysis indicated that the use would generate approximately 23 vehicle trips at its peak hour use. The Department of Transportation requires a traffic study to be prepared only after a use generates at least 43 peak hour trips. Less than 43 peak hour

vehicle trips is not considered to have an impact on the surrounding area.

3. The following are required Site Plan Review findings per Section 16.05 of the L.A.M.C.:

a. The subject development as proposed by the applicant complies with all applicable provisions of the Los Angeles Municipal Code and with any applicable Specific Plan.

The project is not within a specific plan. The project will comply with the approved height limits and will provided code required parking. The structure is functionally obsolete and would require substantial improvements to meet state requirements for a skilled nursing facility. The new structure will comply with all City and State regulations and requirements for a modern assisted living facility.

b. The subject development, as requested by the applicant, is consistent with the adopted General Plan.

The project as proposed would meet the requirements for an Assisted Living Facility within the RA-1 zone. The project is being reviewed for compatibility with the surrounding area and the findings for compatibility have been made, in the affirmative, through the Conditional Use review process.

c. The subject development is not within the boundaries of a Redevelopment Plan.

The project is not within a Redevelopment Area.

d. The subject development consists of an arrangement of buildings and structures, including height, bulk and setbacks, off-street parking facilities, loading areas, lighting, landscaping, trash collection, and other such pertinent improvements which are compatible with existing and/or future development on neighboring properties.

The proposed project will comply with all height and yard requirements as conditioned per the approved Conditional Use Permit. The facility will provide code parking for the assisted living occupants, faculty and visitors. The facility is part of a renovation of the entire facility, however only the assisted living facility is being approved at this time. The new structure will provide additional landscaping and gardens for the site.

e. The subject development incorporates feasible mitigation measures, monitoring measures when necessary, or alternatives identified in the environmental review which would substantially lessen the significant environmental effects of the project, and/or additional findings as may be required by CEQA.

On January 12, 2005, the City issued a Mitigated Negative Declaration (MND-2004-7470) for the project. The City determined that the project may have various environmental impacts and identified various mitigation measures to reduce their level of impact. Those mitigation measures have been incorporated as conditions of approval for the project.

f. That any project containing residential uses provides its residents with appropriate type and placement of recreational facilities and services in order to improve habitability for the residents

and minimize impacts on neighboring properties where appropriate.

The project will cater to residents in need of various levels of assisted living. The facility will provide a fitness room, library, card room and outdoor gardens/fountains with outdoor seating. Much of the indoor and outdoor spaces will be used as passive recreation space. In addition, the facility is part of a larger complex which will provide the residents a broader range of activities on-site.

4. **Environmental.** The City Planning Department on January 12, 2005, determined that the proposed project with the recommended environmental mitigation measures, would not have a significant effect on the environment and issued Mitigated Negative Declaration No. 2004-7470 MND.

5. The **Sewerage Facilities Element** of the General Plan will be affected by the recommended action. However, requirements for construction of sewer facilities to serve the subject project and complete the City sewer system for the health and safety of City inhabitants will assure compliance with the goals of this General Plan Element.

6. Fish and Game. The subject project, which is located in Los Angeles County, will not have an impact on fish or wildlife resources or habitat upon which fish and wildlife depend, as defined by California Fish and Game Code Section 711.2.

7. Based upon the above findings, the recommended action is deemed consistent with public necessity, convenience, general welfare and good zoning practice.

WWC OT
Widom Wein Cohen O'Leary Terasawa

3130 Wilshire Boulevard
Sixth Floor
Santa Monica, California 90403
T (310) 828-0040
F (310) 453-9432
www.wwcot.com

Inland Empire
Palm Springs
Moorpark
Shanghai, China

RECEIVED
10:08 am, Aug 14, 2008
FRAMEMAX

Building Department Submittal: June 1, 2007
Issued For Bid:
Issued For Construction:

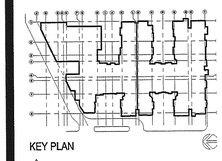

KEY PLAN

Project:
Jewish Home for The Aging
FOUNTAINVIEW AT EISENBERG VILLAGE

6440 Wilbur Ave
Reseda, CA. 91335

JEWISH HOME
JEWISH HOME FOR THE AGING
18855 Victory Blvd.
Reseda, CA 91335

Project Number: 04206.00

Conditional Use Permit Documents

Date: 04/05/2007
Drawn By:
Checked By:

G0.01A
Sheet No.

File Path & Name: F:\PROJECTS\04206-00\A-CD\SHEETS_G0.01A.DWG
© WWCOT 2006 May 28, 2007 - 03:30 pm

CONDITIONAL USE PERMIT (CUP) DOCUMENTS

Scale XX = XX

RECEIVED BY SUFFOLK ON 06/01/07

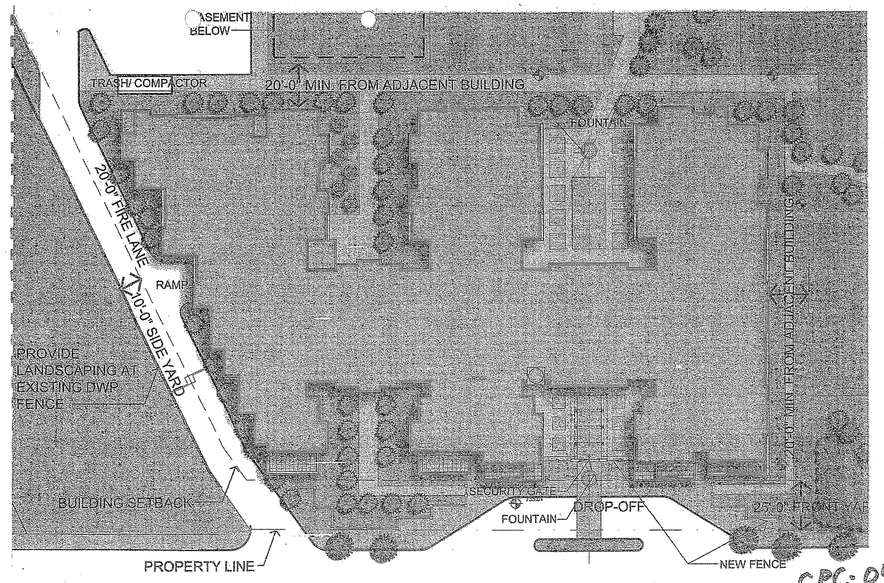

E-3
4.8.05
CPC-04-7469

SITE PLAN

A 1.2

Bross - Bresler Building, Assisted Living Facility

Jewish Home for the Aging, 18855 Victory BLVD, Reseda, CA

SCALE: 1/32" = 1'-0" 0 8' 16' 32'

Job Number: 04206.00
Date: 12-03-04

3130 Wilshire Blvd., 6th Floor Santa Monica, CA 90403-2349/ 310. 828.0040

© WWCOT 2004 F:\projects\04206-00\a-sd\design\conceptual design\Sheets\A1.2.dwg

Widom Wein Cohen O'Leary Terasawa

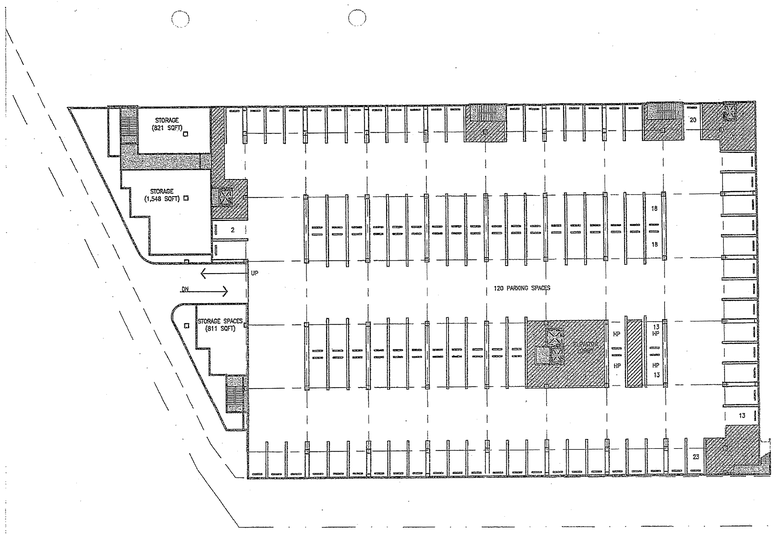

PARKING SPACES CALCULATION

	1BJ	1B	2B	TOTAL
TOTAL UNIT	35	34	45	114
RATIO	x1	x1.5	x2	
PARKING	35	51	90	176

LA CODE SEC. 12.21 A 4 (u)

REDUCED TO 40%: 70

GUEST PARKING SPACES REQUIRED:

0.25 X TOTAL UNIT: 29

TOTAL PARKING SPACES REQUIRED 99

GROUND PARKING SPACES 0

GARAGE PARKING SPACES 120

TOTAL PARKING SPACES PROVIDED 120

E-3
4.8.05
CPC-04-7469

BASEMENT PLAN

A 2.0

Bross - Bresler Building, Assisted Living Facility

Jewish Home for the Aging, 18855 Victory BLVD, Reseda, CA

SCALE: 1/32" = 1'-0" 0 8' 16' 32'

Job Number: 04206.00
Date: 12-03-04

3130 Wilshire Blvd., 6th Floor Santa Monica, CA 90403-2349/ 310. 828.0040

© WWCOT 2004 F:\projects\04206-00\a-sd\design\conceptual design\Sheets\A2.0.dwg

Widom Wein Cohen O'Leary Terasawa

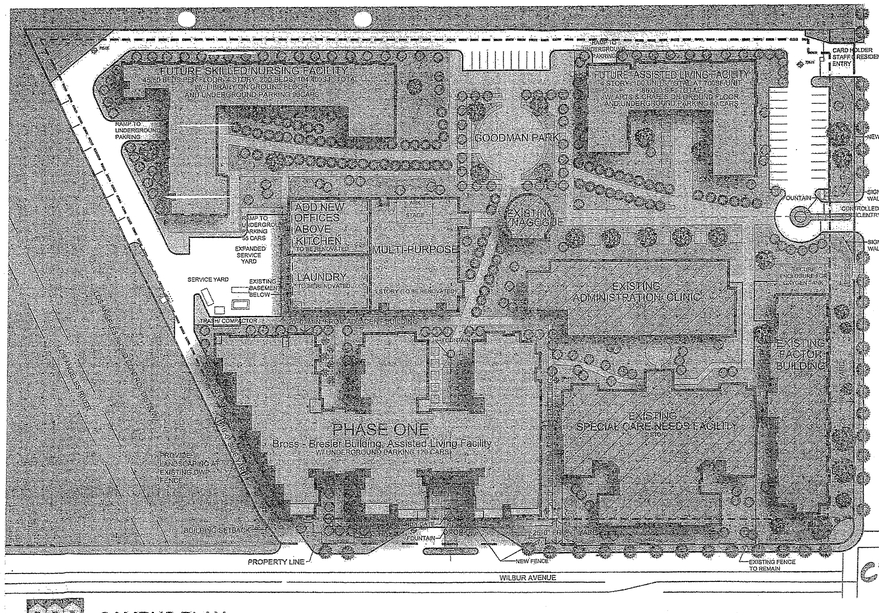

E-3
4.8.05
CPC-04-7469

CAMPUS PLAN

A 1.1

Bross - Bresler Building, Assisted Living Facility

Jewish Home for the Aging, 18855 Victory Blvd, Reseda, CA

SCALE: 1/64" = 1'-0" 0 8' 16' 32' 64'

Job Number: 04206.00
Date: 12-03-04

3130 Wilshire Blvd., 6th Floor Santa Monica, CA 90403-2349/ 310. 828.0040

© WWCOT 2004 F:\projects\04206-00\a-sd\design\conceptual design\Sheets\A1.1.dwg

Widom Wein Cohen O'Leary Terasawa

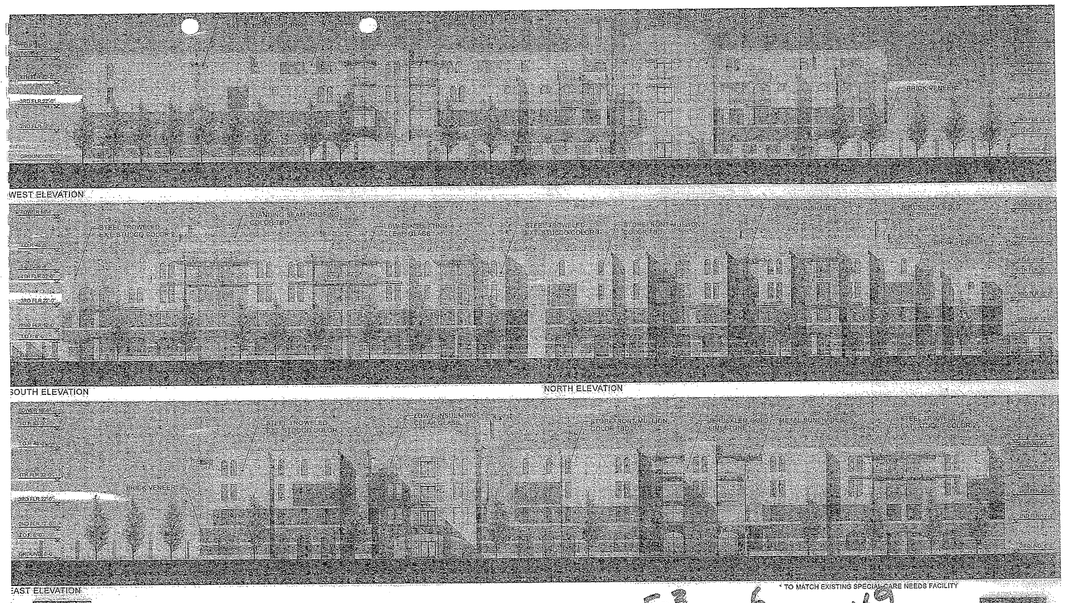

E-3
4.8.05
CPC-04-7469

ELEVATIONS

A3.4

Bross - Bresler Building, Assisted Living Facility

Jewish Home for the Aging, 18855 Victory Blvd, Reseda, CA

Job Number: 04206.00
Date: 12-03-04

3130 Wilshire Blvd., 6th Floor Santa Monica, CA 90403-2349/ 310. 828.0040

Widom Wein Cohen O'Leary Terasawa

WWC OT
Widom Wein Cohen O'Leary Terasawa

3130 Wilshire Boulevard
Sixth Floor
Santa Monica, California 90403
T (310) 828-0040
F (310) 453-9432
www.wwcot.com

Inland Empire
Palm Springs
Moorpark
Shanghai, China

RECEIVED
10:08 am, Aug 14, 2008
FRAMEMAX

Building Department Submittal: June 1, 2007

Issued For Bid:

Issued For Construction:

KEY PLAN

Project:
Jewish Home for The Aging

FOUNTAINVIEW AT EISENBERG VILLAGE

6440 Wilbur Ave
Reseda, CA. 91335

JEWISH HOME

JEWISH HOME FOR THE AGING
18855 Victory Blvd.
Reseda, CA 91335

Project Number: 04206.00

Conditional Use Permit Exhibit E-3

Date: 04/05/2007
Drawn By:
Checked By:

G0.01B

Sheet No.

File Path & Name: F:\PROJECTS\04206-00\A-CD\SHEETS_G0.01B.DWG
© WWCOT 2006 May 23, 2007 - 03:31 pm

CONDITIONAL USE PERMIT (CUP)EXHIBIT E-3

Scale XX = XX

RECEIVED BY SUFFOLK ON 06/01/07

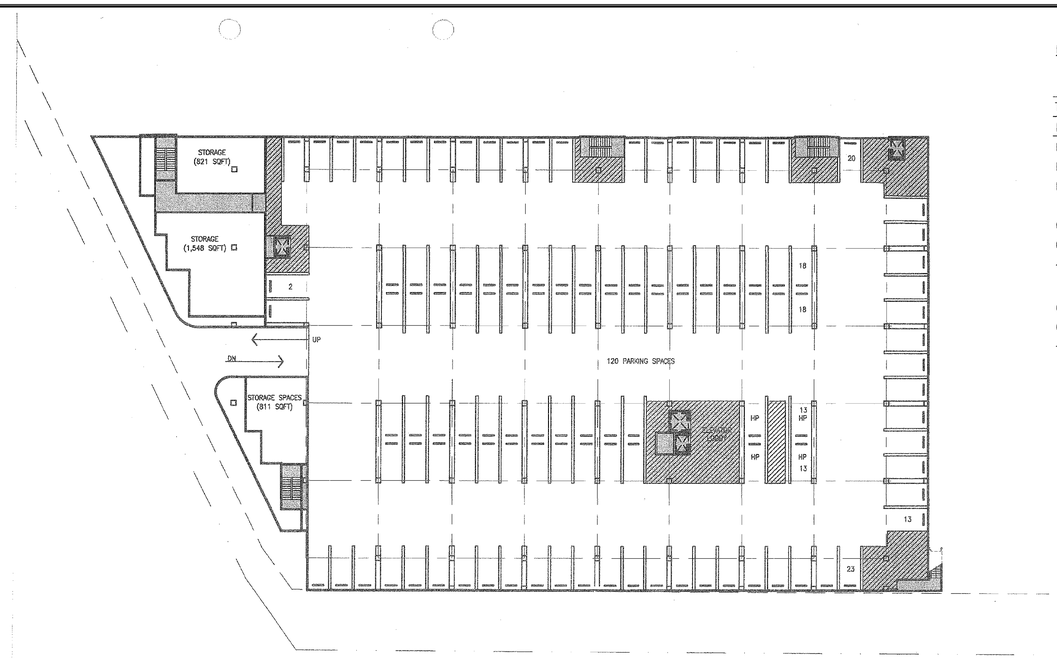

PARKING SPACES CALCULATION

	1BJ	1B	2B	TOTAL
TOTAL UNIT	35	34	45	114
RATIO	x1	x1.5	x2	
PARKING	35	51	90	176

LA CODE SEC. 12.21 A 4 (u)

REDUCED TO 40%:	70
GUEST PARKING SPACES REQUIRED:	
0.25 X TOTAL UNIT:	29
TOTAL PARKING SPACES REQUIRED	99
GROUND PARKING SPACES	0
GARAGE PARKING SPACES	120
TOTAL PARKING SPACES PROVIDED	120

E-3
4-8-05
CPC-04-7469

BASEMENT PLAN

A 2.0

Bross - Bresler Building, Assisted Living Facility

Jewish Home for the Aging, 18855 Victory BLVD, Reseda, CA

SCALE: 1/32" = 1'-0" 0 4' 8' 16' 32'

Job Number: 04206.00
Date: 12-03-04

3130 Wilshire Blvd., 6th Floor Santa Monica, CA 90403-2349/ 310. 828.0040

Widom Wein Cohen O'Leary Terasawa

© WWCOT 2004 F:\projects\04206-00\e-ed\design\conceptual design\Sheets\A2.0.dwg

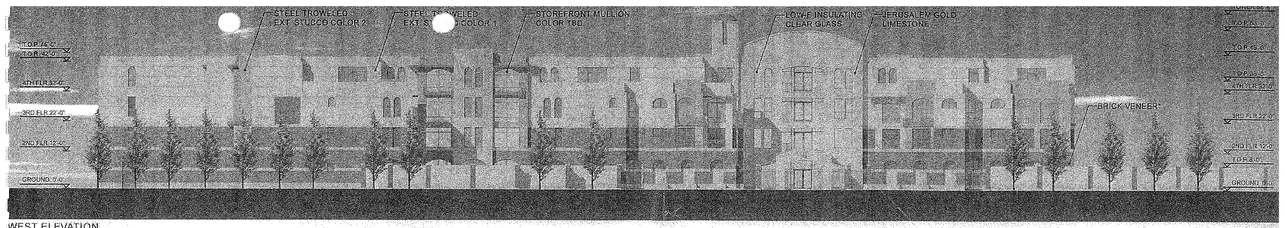

WEST ELEVATION

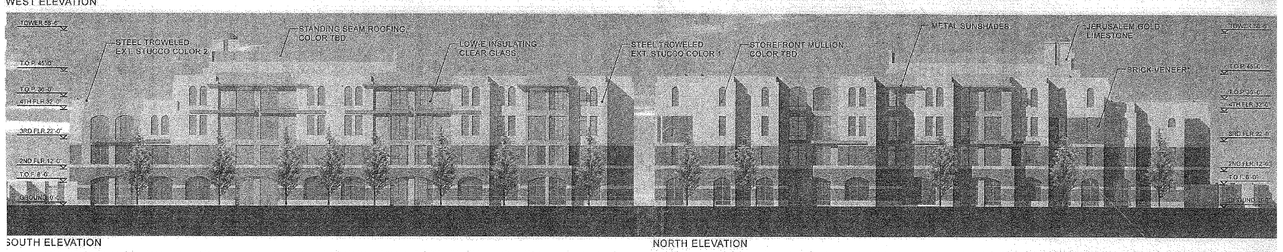

SOUTH ELEVATION

NORTH ELEVATION

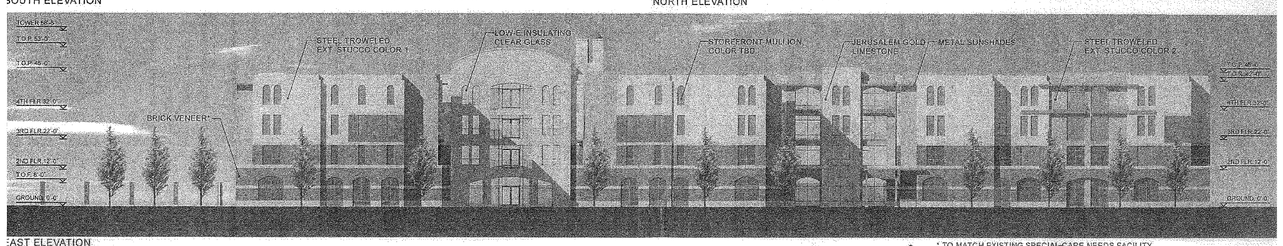

EAST ELEVATION

* TO MATCH EXISTING SPECIAL CARE NEEDS FACILITY

ELEVATIONS

A3.4

Bross - Bresler Building, Assisted Living Facility

Jewish Home for the Aging, 18855 Victory Blvd, Reseda, CA

E-3
4-8-05
CPC-04-7469

Job Number: 04206.00
Date: 12-03-04

3130 Wilshire Blvd., 6th Floor Santa Monica, CA 90403-2349/ 310. 828.0040

Widom Wein Cohen O'Leary Terasawa

File Path & Name: F:\PROJECTS\04206-00\A-CD\SHEETS\ G0.01C.DWG
© WWCOT 2006 Feb 07, 2008 - 10:29 am

CONDITIONAL USE PERMIT (CUP)EXHIBIT E-3

Scale XX = XX -

WWC OT
Widom Wein Cohen O'Leary Terasawa

3130 Wilshire Boulevard
Sixth Floor
Santa Monica, California 90403
T (310) 828-0040
F (310) 453-9432
www.wwcot.com

Inland Empire
Palm Springs
Moorpark
Shanghai, China

RECEIVED
10:08 am, Aug 14, 2008
FRAMEMAX

Building Department Submittal: June 1, 2007
Issued For Bid:
Issued For Construction: January 29, 2008

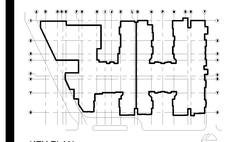

KEY PLAN

Project:
Jewish Home for The Aging

FOUNTAINVIEW AT EISENBERG VILLAGE

6440 Wilbur Ave
Reseda, CA. 91335

JEWISH HOME FOR THE AGING
18855 Victory Blvd.
Reseda, CA 91335

Project Number: 04206.00

Conditional Use Permit Exhibit E-3

Date: 01/21/2008
Drawn By:
Checked By:

G0.01C
Sheet No.

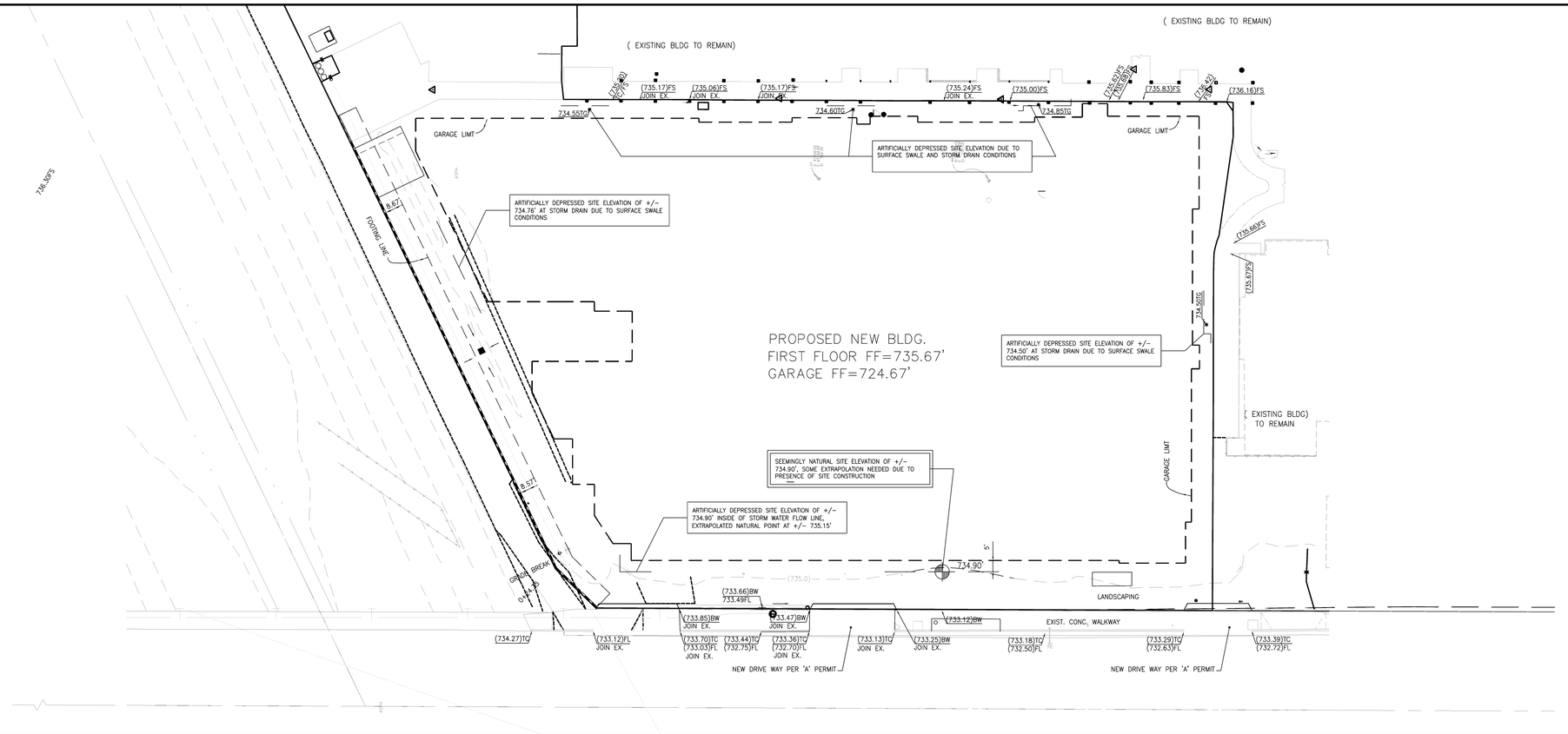

BUILDING HEIGHT SITE DIAGRAM

Scale NTS 4

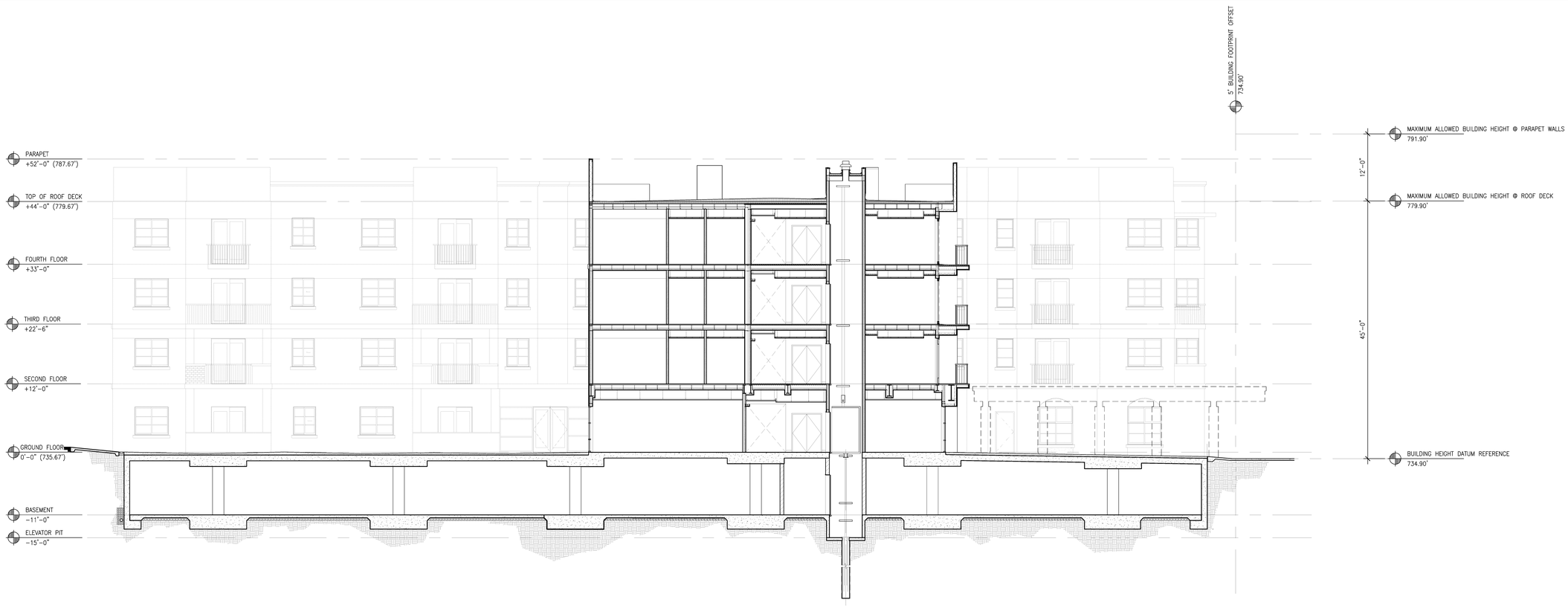

BUILDING HEIGHT DIAGRAM

Scale 1/8" = 1'-0" 1

WWCOT
Widom Wein Cohen O'Leary Terasawa

3130 Wilshire Boulevard
Sixth Floor
Santa Monica, California 90403
T (310) 828-0040
F (310) 453-9432
www.wwcot.com

Inland Empire
Palm Springs
Moorpark
Shanghai, China

RECEIVED
10:08 am, Aug 14, 2008
FRAMEMAX

Building Department Submittal: June 1, 2007
Issued For Bid:
Issued For Construction: January 29, 2008

KEY PLAN

Project:
Jewish Home for The Aging
FOUNTAINVIEW AT EISENBERG VILLAGE
6440 Wilbur Ave
Reseda, CA. 91335

JEWISH HOME FOR THE AGING
18855 Victory Blvd.
Reseda, CA 91335
Project Number: 04206.00

Building Height Diagram

Date: 01/21/2008
Drawn By:
Checked By:

G0.01D
Sheet No.

File Path & Name: F:\PROJECTS\04206.00\A-CD\SHEETS_G0.01D.DWG
© WWCOT 2006 Feb 08, 2008 - 10:43 am

BOARD OF BUILDING AND SAFETY COMMISSIONERS
MARSHALL BROWN PRESIDENT
PEDRO BIRBA VICE-PRESIDENT
VAN AMBATIELOS
HELENA JUBANY
ELENORE A. WILLIAMS

CITY OF LOS ANGELES
CALIFORNIA

ANTONIO R. VILLARAIGOSA
MAYOR

DEPARTMENT OF BUILDING AND SAFETY
201 NORTH FIGUEROA STREET
LOS ANGELES, CA 90012
ANDREW A. ADELMAN, P.E.
GENERAL MANAGER
RAYMOND CHAN
EXECUTIVE OFFICER

SOILS REPORT APPROVAL LETTER

LOG # 60993
SOILS FILE - 2
LIQ

December 7, 2007

Jewish Home for the Aging
11766 Whilshire Boulevard
Los Angeles, CA 90025

TRACT: 29228
LOT: 1
LOCATION: 18855 W Victory Boulevard

CURRENT REFERENCE REPORT/LETTER(S)	REPORT NO.	DATE(S) OF DOCUMENT	PREPARED BY
Soils Report	18973	8/29/2005	Geotechnologies, Inc.

PREVIOUS REFERENCE REPORT/LETTER(S)	REPORT NO.	DATE(S) OF DOCUMENT	PREPARED BY
Soils Report	SG-2690-S1	11/11/1998	Earth Systems
Soils Report	SG-2690-S1	5/12/1999	Earth Systems
Soils Report	SG-2690-S1	6/29/1999	Earth Systems
Approval	Log #28788	9/28/1999	LADBS

The Grading Division of the Department of Building and Safety has reviewed the report dated 8/29/05 for the proposed construction of a 4-story building over 1 level of subterranean parking. The proposed building will be used as an assisted living facility as a part of the Jewish Home for the Aging.

According to the report, the project site is bounded by the Los Angeles River on the north, adjacent properties on the east, and the public streets on the other sides. The subsurface materials are highly expansive and consist of 5 to 15 feet of fill over natural soils mainly of gravelly silty clayey sand, sand, sandy silt, and silty clay. Groundwater was encountered at 16.5 feet below grade. The historic-high groundwater is at 5 feet below grade. The report recommends permanent dewatering as an alternative to designing the basement for hydrostatic pressure and uplift. Temporary excavations will be up to 15 feet and performed by open cuts, slot cuts, and shoring. Gravel mats are proposed for stabilizing the excavation bottoms.

The site is located within the Liquefaction Hazard Zone as mapped by the State of California. The report study shows that the project site is not subject to a potential of liquefaction. This satisfies the requirements of the State of California Public Resources Code, Section 2690 et seq. (Seismic Hazard Mapping Act).

The report of 8/29/05 is acceptable, provided the following conditions are complied with during site development:

(Numbers in parentheses refer to applicable sections of the 2002 Building Code, or the Information Bulletin Number. The Information Bulletins can be accessed on the internet at LADBS.ORG.)

1. Prior to the issuance of a permit involving dewatering, the owner shall obtain clearances from the Department of Public Works and the California Regional Water Quality Control Board for the proposed dewatering.

2. The soils engineer shall evaluate the effects of the proposed dewatering on the existing offsite structures and facilities. A supplementary report shall be submitted to the Department in the event the proposed dewatering should have any adverse effects on the existing offsite structures or facilities.

3. The soil engineer shall review and approve the detailed plans prior to issuance of any permits. This approval shall be by signature on the plans which clearly indicates that the soil engineer has reviewed the plans prepared by the design engineer and that the plans include the recommendations contained in the report.

4. All the recommendations of the report, which are in addition to or more restrictive than the conditions contained herein shall be incorporated into the plans.

5. Vertical and lateral supports of the existing footings shall be maintained at all time during the proposed temporary excavations.

6. All footings shall be supported on the competent native soils, as recommended in the report.

7. Frictional and lateral resistance of soils may be combined, provided the lateral bearing resistance does not exceed two-thirds of the allowable lateral bearing.

8. Concrete floor slabs placed on expansive soil shall be placed on a 4-inch-thick fill of coarse aggregate or on a moisture barrier membrane. The slabs shall be at least 3½ inches thick and shall be reinforced with ½-inch diameter (#4) reinforcing bars spaced a maximum of 16 inches on center each way. (1804.4)

9. Footings or slabs to supported on expansive soil shall be designed and constructed to the requirements as recommended by the soils engineer, which shall be no less than as stipulated in Code Section 1804.4.

10. The LABC Soil Type underlying the site is Sd. The minimum horizontal distances to known seismic sources shall conform to the Maps of Known Active Fault Near Source Zones published by ICBO. (Table 16 A-J)

11. If the actual foundation design loads do not conform to the foundation loads assumed in the report, the soil engineer shall submit a supplementary report containing specific design recommendations for the heavier loads to the Department for review and approval prior to issuance of a permit.

12. Existing uncertified fill shall not be used for support of footings, concrete slabs or new fill.

13. A grading permit shall be obtained. (106.1.2.)

14. All man-made fill shall be compacted to a minimum 90 percent of the maximum dry density of the fill material per the latest version of ASTM D 1557; Where cohesionless soil having less than 15 percent finer than 0.005 millimeters is used for fill, it shall be compacted to a minimum of 95 percent relative compaction based on maximum dry density.

15. All roof and pad drainage shall be conducted to the street in an acceptable manner. (7013.10)

16. The applicant is advised that the approval of this report does not waive the requirements for excavations contained in the State Construction Safety Orders enforced by the State Division of Industrial Safety.

17. Prior to the issuance of any permit which authorizes an excavation where the excavation is to be of a greater depth than are the walls or foundation of any adjoining building or structure and located closer to the property line than the depth of the excavation, the owner of the subject site shall provide the Department with evidence that the adjacent property owner has been given a 30-day written notice of such intent to make an excavation.

18. Unsupported temporary excavations shall not be subject to surcharged load. The portion of the excavations higher than 5 feet shall be sloped to a gradient no steeper than 1:1, as recommended in the report.

19. The thickness of the gravel mats for used in stabilizing the excavation bottoms shall be determined by the soils engineer, but not exceeding 8 inches.

20. Slot cuts used in the temporary excavations shall be the A-B-C method, with each slot not exceeding 8 feet wide. The height of the slot cuts shall be determined by the soils engineer, but not exceeding 8 feet. Slot cuts shall not be used for supporting offsite structures.

21. Shoring shall be designed for the minimum lateral pressures as recommended in page 48 of the report. The soils engineer and/or structural engineer shall determine and include all additional surcharge loads for the design of the proposed shoring.

22. Shoring shall be designed for an allowable deflection not exceeding as recommended in page 51 of the report. The soils engineer shall evaluate the effect of the shoring deflections on the existing structures and shall revise the recommendations, if necessary.

23. The soil engineer shall monitor the shoring deflections during construction from affecting existing offsite structures and facilities.

24. The installation and testing of temporary tie-back anchors shall conform to the recommendations included in the report or to the Department's Research Report No. RR23835 titled "Requirements For Temporary Tieback Earth Anchors", whatever is more restrictive.

25. The soils engineer shall evaluate the effects of the proposed high pressure grouting (post-grouting) for tieback anchors on the existing offsite structures and facilities.

26. Installation of shoring, tieback anchors, or slot cutting excavations shall be performed under the inspection and approval of the soils engineer and deputy grading inspector.

27. Retaining walls shall be designed for the minimum lateral pressures as recommended in page 39 of the report. The soils engineer and structural engineer shall determine and include all additional surcharge loads for the design of the retaining walls.

28. Basement retaining walls, or portion thereof, located below the historic high groundwater shall be designed for the hydrostatic pressure in addition to the earth pressure, unless a permanent dewatering system is provided.

29. Retaining walls supporting exposed areas shall be provided with a standard surface backdrain system and all drainage shall be conducted to the street in an acceptable manner and in a non-erosive device.

30. Retaining walls, or portion thereof, not designed for hydrostatic pressure shall be provided with a subdrain system to prevent built up of hydrostatic pressure. The subdrain system shall be as recommended in the report, but not less than the traditionally acceptable method of (a) 4-inch weepholes at 8-foot center wrapped with 1-foot cube of drainage rock, or (b) a continuous 4-inch perforated drain-pipe surrounded by 1-foot square of drainage rock. Prior to the issuance of any permit, the retaining wall subdrain system shall be incorporated into the foundation plan which shall be reviewed and approved by the soils engineer of record. (7015.5 & 108.9)

31. Prefabricated drainage composite, including Miradrains, for use in the retaining wall subdrains shall be installed in addition to the traditionally accepted methods for draining retained earth.

32. Installation of the subdrain system shall be inspected and approved by the soil engineer of record and the City grading/building inspector. (7015.5 & 108.9)

33. The basement floor slab shall be designed for the effects of hydrostatic uplift due to the historic-high groundwater, unless a permanent dewatering system is provided.

34. Basement walls and slab shall be waterproofed with an L.A. City approved "Below-grade waterproofing" material with a research report number.

35. Prior to the placing of compacted fill, a representative of the soils engineer shall inspect and approve the bottom excavations. He shall post a notice on the job site for the City Grading Inspector and the Contractor stating that the soil inspected meets the conditions of the report,

but that no fill shall be placed until the LADBS Grading Inspector has also inspected and approved the bottom excavations. A written certification to this effect shall be included in the final compaction report filed with the grading Division of the Department. All fill shall be placed under the inspection and approval of the soils engineer. A compaction report together with the approved soil report and Department approval letter shall be submitted to the Grading Division of the Department upon completion of the compaction. An engineer's certificate of compliance shall include the grading permit number and the legal descriptions as described in the permit. (7011.3)

36. Prior to the pouring of concrete, a representative of the soil engineer shall inspect and approve the footing excavations. A notice shall be posted on the job site for the City Building Inspector and the Contractor stating that the work so inspected meets the conditions of the report, but that no concrete shall be poured until the City Building Inspector has also inspected and approved the footing excavations. A written certification to this effect shall be filed with the Department upon completion of the work.

37. The soil engineer shall inspect all excavations to determine that conditions anticipated in the report have been encountered and to provide recommendations for the correction of hazards found during construction.

38. Prior to excavation, an initial inspection shall be called at which time sequence of shoring, protection fences and dust and traffic control will be scheduled.

RAPHAEL CHENG
Geotechnical Engineer I

RHC/rhc
60993
(213) 482-0480

cc: Geotechnologies, Inc.
VN District Office
Applicant

WWC OT
Widom Wein Cohen O'Leary Terasawa

3130 Wilshire Boulevard
Sixth Floor
Santa Monica, California 90403
T (310) 828-0040
F (310) 453-9432
www.wwcot.com

Inland Empire
Palm Springs
Moorpark
Shanghai, China

RECEIVED
10:08 am, Aug 14, 2008
FRAMEMAX

Building Department Submittal: June 1, 2007
Issued For Bid:
Issued For Construction: January 29, 2008

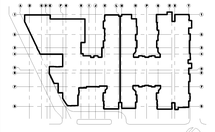

KEY PLAN

Project:
Jewish Home for The Aging
FOUNTAINVIEW AT EISENBERG VILLAGE
6440 Wilbur Ave
Reseda, CA. 91335

JEWISH HOME FOR THE AGING
18855 Victory Blvd.
Reseda, CA 91335
Project Number: 04206.00

Soils Approval Letter

Date: 01/21/2008
Drawn By:
Checked By:

G0.01E
Sheet No.

File Path & Name: F:\PROJECTS\04206-00\A-CD\SHEETS_G0.01E.DWG
© WWCOT 2006 Feb 07, 2008 - 10:29 am

SOILS APPROVAL LETTER

Scale XX = XX

NOT USED

Scale NTS 2

BOARD OF BUILDING AND SAFETY COMMISSIONERS
MARSHA L. BROWN PRESIDENT
PEDRO BIRBA VICE-PRESIDENT
VAN AMBATIELOS
HELENA JUBANY
ELENORE A. WILLIAMS

CITY OF LOS ANGELES
CALIFORNIA

ANTONIO R. VILLARAIGOSA
MAYOR

DEPARTMENT OF BUILDING AND SAFETY
201 NORTH FIGUEROA STREET
LOS ANGELES, CA 90012

ANDREW A. ADELMAN, P.E.
GENERAL MANAGER

RAYMOND CHAN
EXECUTIVE OFFICER

PACO Steel & Engineering Corporation
19818 S. Alameda Street
Rancho Dominguez, CA 90221

RESEARCH REPORT: RR 25692
(CSI 13120)

Expires: January 1, 2009

Attn: David Paik
(310) 537-6375

GENERAL APPROVAL - PACO Steel ASTM A 769, Gr. 50 Steel Beam and Column.

DETAILS

Mechanical Requirement of Electric Resistance Forge Welded Beam and Column:

Yield Strength:	50,000 psi minimum
Tensile Strength:	65,000 psi minimum
Elongation (min):	21% on 2"

RR 25692
Page 1 of 3

LADBS G-6 (Rev 7/05) AN EQUAL EMPLOYMENT OPPORTUNITY - AFFIRMATIVE ACTION EMPLOYER

PACO Steel & Engineering Corporation
Re: PACO Steel ASTM A 769, Gr 50 Steel Beam and Column

CHEMICAL COMPOSITION, WT %

Element	ERW Beam		A 769 Gr 50
	Flange	Web	
Carbon	0.05	0.05	0.20 max
Manganese	0.48	0.48	0.30 - 1.50
Phosphorus	0.009	0.009	0.035 max
Sulfur	0.002	0.002	0.04 max
Aluminum	0.034	0.034	NR
Silicon	0.019	0.019	NR
Copper	0.08	0.08	NR
Nickel	0.03	0.03	NR
Chromium	0.04	0.04	NR
Molybdenum	0.007	0.007	NR
Vanadium	0.038	0.038	NR
Niobium	0.002	0.002	NR
Nitrogen	0.013	0.013	NR

NR= No Requirement

The approval is subject to the following conditions:

1. Test data from the mill or from a Los Angeles City approved testing agency shall be submitted to the inspector, to verify the material in accordance with the above specifications for each job.
2. All steel materials shall be identified by stamping - "Los Angeles City RR 25692", on all shipping containers, packing lists and shipping documents.
3. Complete material specifications with the applicable specified minimum yield point shall be shown on the Department approved design/construction drawings for each specific job.

RR 25692
Page 2 of 3

PACO Steel & Engineering Corporation
Re: PACO Steel ASTM A 769, Gr 50 Steel Beam and Column

4. Fabrication of PACO steel beam and column shall be in a shop of fabricator licensed by the standard submitted to the Department.

DISCUSSION

The approval is based on the mechanical properties and chemical analysis provided by PACO Steel Engineering Corporation.

This general approval of an equivalent alternate to the Code is only valid where an engineer and/or inspector of this Department has determined that all conditions of this approval have been met in the project in which it is to be used.

Addressee to whom this Research Report is issued is responsible for providing copies of it, complete with any attachments indicated, to architects, engineers and builders using items approved herein in design or construction which must be approved by Department of Building and Safety Engineers and Inspectors.

YEUAN CHOU, Chief
Engineering Research Section
2319 Dorris Place
Los Angeles, CA 90031
Phone (213)485-2376
Fax (213) 847-0085

YC:clcm
RR25692Avg8.0
X01/17/08
XC1/2000

RR 25692
Page 3 of 3

PACO STUDS LARR#

Scale NTS 1

WWC OT
Widom Wein Cohen O'Leary Terasawa

3130 Wilshire Boulevard
Sixth Floor
Santa Monica, California 90403
T (310) 828-0040
F (310) 453-9432
www.wwcot.com

Inland Empire
Palm Springs
Moorpark
Shanghai, China

RECEIVED
10:08 am, Aug 14, 2008
FRAMEMAX

Building Department Submittal: June 1, 2007
Issued For Bid:
Issued For Construction: January 29, 2008

KEY PLAN

Project:
Jewish Home for The Aging
FOUNTAINVIEW AT EISENBERG VILLAGE
6440 Wilbur Ave
Reseda, CA. 91335

JEWISH HOME
JEWISH HOME FOR THE AGING
18855 Victory Blvd.
Reseda, CA 91335

Project Number: 04206.00

PACO LARR Letter

Date: 01/21/2008
Drawn By:
Checked By:

G0.01F
Sheet No.

File Path & Name: F:\PROJECTS\04206.00\A-CD\SHEETS_G0.01F.DWG
© WWCOT 2006 Feb 07, 2008 - 10:29 am

HYDROQUIP PUMP & DEWATERING CORP.
9355 Stewart & Gray Road Downey, CA 90241
562-921-1768 Fax 562-923-5162

November 27, 2007

WWCOT
3130 Wilshire Blvd.
7th Floor
Santa Monica, CA 90403-2349

Attention: Anabel Martinez

Re: Dewatering Overview and Dewatering Testing Report
Jewish Homes for the Aging
Work Order per Master Agreement dated: In Progress
WWCOT Project No. 042006.00 ES 6
Reseda, CA

Dear Anabel,

Thank you for your patience and the interest you have shown in our services.

BACKGROUND

Per our review of the information you supplied including the Preliminary Geotechnical Engineering Investigation Report by Geotechnologies dated August 29, 2005, File No. 18973, the various plans and specifications we were provided, our inspection and examination of the site, our extensive experience in this immediate area on several very nearby projects, and our now completed test drilling and monitoring of the installed devices at this site we have prepared and present this report.

GOALS

HPD mobilized a truck mounted bucket type drilling machine and all support equipment and materials to the site to install several large 30-36 inch diameter test borings to allow the direct observation of the behavior of the ground conditions relative to the encounter of groundwater.

Among the targets at which this program was directed were the following:

One. The dewatering related impacts including the proper and most applicable dewatering techniques, the exact, static groundwater elevation, pumping time frames, pumping volumes, the proper approach to the dewatering required for this project per the conditions, and an accurate projection of the dewatered conditions which may be anticipated as they relate to excavation, shoring, permitting, and scheduling.

Two. Securing the NPDES General Discharge Permit for storm drain discharge for this project including water quality testing, preparation and submittal of the permit application, and accurate discharge volumes and times frames accurately demonstrated by test pumping. The filing fee for the NPDES Permit is currently $4,800 and the application must be wet signed by the property Owner. Approximately 5 weeks should be allotted for application, submittal, and receipt of the permit.

Three. Correlated with the project design and relative to the planned shoring and excavation procedures provide a complete proposal and dewatering plan and submittals for the dewatering required on this project.

TESTING

As opposed to soil borings fully developed wells (see plate Typical Dewatering Well enclosed) are extremely accurate indicators of actual groundwater levels and fluctuations, if any. In addition, proper test pumping will generate the flows required for permits, required pumping time frames, power requirements, and all other information.

Two Exploratory wells were installed at the locations depicted on Plate A attached. This location was selected for access and its close proximity to the Los Angeles River directly to the north of the site. Direct, downhole observation of the conditions and the behavior of the non-dewatered soils were made.

When groundwater is encountered during drilling with this type of equipment, and if the severity of the groundwater intrusion induced caving will not allow the advancement of the boring indicating that temporary construction dewatering will be required, a water and drilling gel head is added to the boring to stabilize the sidewalls. Both of the wells produced no observable groundwater intrusion to a depth of +-25 feet BGS. The borings were drilled

and observed to be dry and remained so for several hours. Both borings were fitted with perforated, PVC casing materials centered in the borings, and the annular voids filled to ground surface with washed, rinsed, well pack materials, in this instance a #4 gravel. For several weeks the water levels have been measured in both wells and the water level is still well below any level which could be encountered for the excavation of 10-15 feet BGS per the plans and information in our possession. Groundwater is currently standing at 25.1 and 25.7 feet BGS without formal survey and monitored with an electronic well sounder. Note that this level has not changed over the past several weeks. Due to recent heavy rains HPD will continue to monitor these levels and report any changes which are, in our opinion remote and unlikely.

WATER QUALITY

As we terminated the drilling and well construction at 25 feet BGS we have not, as yet, been able to collect the water samples for laboratory testing but will do so if/when possible. As no pumping or discharge will take place during construction this will not create any delays.

TEMPORARY CONSTRUCTION DEWATERING

No temporary construction dewatering of any magnitude will be required for this project. In conjunction with the Geotechnologies findings and our findings it appears that the required excavation and shoring operations of up to 12-15 feet BGS will not encounter groundwater which currently resides at 23-24 feet BGS.

HISTORIC HIGH GROUNDWATER LEVEL

The historic high groundwater levels on any site are a source of very high concern and a hindrance on many projects. It can significantly impact projects such as this where construction will take place well above the actual, current groundwater level, temporary construction dewatering will not be required, yet the design of the structure as hydrostatic or the addition of a permanent dewatering system is required. As recommended by Geotechnologies these 2 choices are available for this project. A hydrostatic design includes full, highly competent waterproofing and the construction of a structure which is essentially too heavy to float and too stiff to break under the pressures which would be induced by the rebound of groundwater to the historic high of 5 feet BGS (greatly thickened slabs and walls, increased rebar quantity and size, etc.). This can be very expensive and time consuming to

build for an eventuality which, in Hydroquip's opinion, is very unlikely and very remote at best. As the areas surrounding this site are increasingly developed and paved, large open areas which would result in rainfall related rises in the groundwater elevation to occur makes this potential even more remote on almost a daily basis.

Under these conditions the method of choice is often to install a permanent dewatering or subdrain system under and around the lowest levels of the foundation to collect and remove any groundwater from elevations which could cause serious damage to the structure. We fully concur with the Geotechnologies overview that:

> Unless the subterranean portion of the proposed structure is designed to resist expected hydrostatic pressures, permanent dewatering will be required to keep potentially rising groundwater from impacting the structure. A subdrainage system consisting of perforated pipe placed in gravel-filled trenches should be installed beneath the mat foundation to intercept rising groundwater. A typical subslab drainage system would consist of a one-foot thick layer of ¾-inch gravel which is vibrated to dense state. The gravel layer should be drained by subdrain pipes leading to sump areas provided with automatic pumping units.
>
> The drain lines should consist of perforated pipe, placed with perforations down in trenches which are at least one foot below the gravel layer. These drainage trenches, filled with gravel, should be wrapped with filter fabric. The trenches should be spaced at a maximum of 40 feet apart, within the interior, and should extend along the perimeter of the building. Detailed recommendations regarding the design flow rates for the permanent dewatering system should be determined by a qualified dewatering consultant.

As this system would be initially (and potentially forever) dormant we project that if a rise in the groundwater to the historic high level was encountered that

a flow of less than 10-15 gpm would be collected and discharged by the entire system. When any discharge takes place from any site it must be done under an NPDES Discharge Permit issued specifically to the site by the California Regional Water Quality Control Board. This permit has an initial fee of $4,800 and a yearly renewal fee of $4,800/yr. This is incurred even if no discharge is taking place. If contaminated ground water is collected by the system it is the responsibility of the Owner of the facility to meet the standards in the permit and back up the reporting with lab testing and the filing of reports at a frequency prescribed by the CRWQCB.

Hydroquip suggests that an initial series of groundwater testing is done (a part of our original scope of work) to establish a baseline upon which to make certain of these decisions. We will obviously need to wait until adequate samples can be collected from our wells or install another, deeper device.

If it is economically possible/feasible HPD recommends that at least a thorough review and pricing of the hydrostatic scenario is undertaken. This is the safest and in the long term potentially less expensive alternative to manage this matter.

SUMMARY

In summary groundwater is standing well below any excavation levels for this project as reflected in the plans in our possession, or greater than 24 feet BGS. Groundwater samples will be collected if/when adequate samples can be collected from these devices installed by HPD or an additional device will be installed. HPD will continue to monitor the water level in these devices at frequent intervals to observe whether recent weather has impacted the water levels. HPD fully agrees with the Geotechnologies recommendation that either a hydrostatic design (preferable) or a permanent pumping design will be required and each has its impacts in time, risks, and costs to any project.

It is very difficult to touch on every conceivable concern or question which may arise by members of a design team in one document. If you need clarification of any of the above or any additional information we can provide please feel free to contact the undersigned.

Thank you,
Jerry King
Jerry King
President

encl: 2

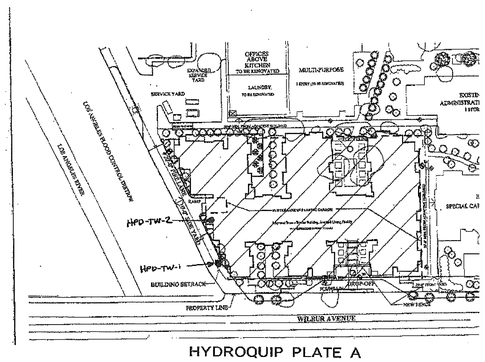

HYDROQUIP PLATE A

WWC OT
Widom Wein Cohen O'Leary Terasawa

3130 Wilshire Boulevard
Sixth Floor
Santa Monica, California 90403
T (310) 828-0040
F (310) 453-9432
www.wwcot.com

Inland Empire
Palm Springs
Moorpark
Shanghai, China

RECEIVED
10:08 am, Aug 14, 2008
FRAMEMAX

Building Department Submittal: June 1, 2007
Issued For Bid:
Issued For Construction: January 29, 2008

KEY PLAN

Project:
Jewish Home for The Aging
FOUNTAINVIEW AT EISENBERG VILLAGE
6440 Wilbur Ave
Reseda, CA. 91335

JEWISH HOME FOR THE AGING
18855 Victory Blvd.
Reseda, CA 91335
Project Number: 04206.00

DEWATERING REPORT

Date: 01/21/2008
Drawn By:
Checked By:

G0.01G
Sheet No.

File Path & Name: F:\PROJECTS\04206-00\A-CD\SHEETS_G0.01G.DWG
© WWCOT 2006 Feb 07, 2008 - 10:29 am

Dewatering Report

Scale NTS

1

ELECTRICAL (CONTINUED) (49 SHEETS)

SHEET NUM.	SHEET DESCRIPTION	DD SUBMITTAL 12.13.06	02-05-2007	06-01-2007
E8.01	ELECTRICAL ENLARGED UNIT RCP PLANS	X	X	X
E8.02	ELECTRICAL ENLARGED UNIT RCP PLANS	X	X	X
E8.03	ELECTRICAL ENLARGED UNIT RCP PLANS	X	X	X
E8.04	ELECTRICAL ENLARGED UNIT RCP PLANS	X	X	X
E8.05	ELECTRICAL ENLARGED UNIT RCP PLANS	X	X	X
E8.06	ELECTRICAL ENLARGED UNIT RCP PLANS	X	X	X
E9.00	ELECTRICAL PANEL SCHEDULE			X
E9.01	ELECTRICAL PANEL SCHEDULE			X
E9.02	ELECTRICAL PANEL SCHEDULE			X
E9.03	ELECTRICAL PANEL SCHEDULE			X
E9.04	ELECTRICAL PANEL SCHEDULE			X

PLUMBING (27 SHEETS)

P001	PLUMBING SYMBOS, ABBREVIATIONS GENERAL NOTES AND DRAWING LIST	X	X	X
P002	PLUMBING SCHEDULE	X	X	X
P003	PLUMBING CALCULATIONS & SCHEDULES	X	X	X
P101	PLUMBING SITE PLAN	X	X	X
P2.01	PLUMBING BASEMENT FLOOR PLAN-WASTE& VENT (NORTH)	X	X	X
P2.02	PLUMBING BASEMENT FLOOR PLAN-WASTE& VENT (SOUTH)	X	X	X
P2.03	PLUMBING BASEMENT FLOOR PLAN-WATER & GAS (NORTH)	X	X	X
P2.04	PLUMBING BASEMENT FLOOR PLAN-WATER & GAS (SOUTH)	X	X	X
P2.11	PLUMBING GROUND FLOOR PLAN NORTH	X	X	X
P2.12	PLUMBING GROUND FLOOR PLAN SOUTH	X	X	X
P2.21	PLUMBING SECOND FLOOR PLAN NORTH	X	X	X
P2.22	PLUMBING SECOND FLOOR PLAN SOUTH	X	X	X
P2.31	PLUMBING THIRD FLOOR PLAN NORTH	X	X	X
P2.32	PLUMBING THIRD FLOOR PLAN SOUTH	X	X	X
P2.41	PLUMBING FOURTH FLOOR PLAN NORTH	X	X	X
P2.42	PLUMBING FOURTH FLOOR PLAN SOUTH	X	X	X
P2.51	PLUMBING ROOF PLAN NORTH	X	X	X
P2.52	PLUMBING ROOF PLAN SOUTH	X	X	X
P3.01	PLUMBING ENLARGED UNITS PLAN	X	X	X
P3.02	PLUMBING ENLARGED UNITS PLAN	X	X	X
P3.03	PLUMBING ENLARGED UNITS PLAN	X	X	X
P3.04	PLUMBING ENLARGED UNITS PLAN	X	X	X
P3.05	PLUMBING ENLARGED UNITS PLAN	X	X	X
P3.06	PLUMBING ENLARGED UNITS PLAN	X	X	X
P4.01	PLUMBING DETAILS	X	X	X
P4.02	PLUMBING DETAILS			X
P4.03	PLUMBING DETAILS			X
P4.04	PLUMBING DETAILS			X
P4.05	PLUMBING PUMP CALCULATIONS			X
P5.01	FOOD SERVICE PLUMBING SCHEDULE		X	X
P5.02	KITCHEN PLUMBING PLAN- WATER AND GAS		X	X
P5.03	KITCHEN PLUMBING PLAN- WASTE AND VENT			X
P6.01	PLUMBING STORM DRAIN PIPING DIAGRAM			X
P6.02A	PLUMBING WASTE AND VENT DIAGRAM			X
P6.02B	PLUMBING WASTE AND VENT DIAGRAM (CONTINUED)			X
P6.02C	PLUMBING WASTE AND VENT DIAGRAM (CONTINUED)			X
P6.02D	PLUMBING WASTE AND VENT DIAGRAM (CONTINUED)			X
P6.03A	PLUMBING COLD WATER RISER DIAGRAM			X
P6.03B	PLUMBING COLD WATER RISER DIAGRAM (CONTINUED)			X
P6.03C	PLUMBING COLD WATER RISER DIAGRAM (CONTINUED)			X
P6.03D	PLUMBING COLD WATER RISER DIAGRAM (CONTINUED)			X
P6.04A	PLUMBING HOT WATER RISER DIAGRAM (NORTH)			X
P6.04B	PLUMBING HOT WATER RISER DIAGRAM (CENTER)			X
P6.04C	PLUMBING HOT WATER RISER DIAGRAM (SOUTH)			X

FOOD SERVICE – KITCHEN AREA (15 SHEETS)

K1.01	GROUND FLOOR PLAN NORTH – FOOD SERVICE EQUIPMENT SCHEDULE	X	X	X
K2.01	GROUND FLOOR PLAN NORTH – FOOD SERVICE EQUIPMENT PLAN	X	X	X
K3.01	GROUND FLOOR PLAN NORTH – FOOD SERVICE PLUMBING PLAN		X	X
K4.01	GROUND FLOOR PLAN NORTH – FOOD SERVICE ELECTRICAL PLAN		X	X
K5.01	GROUND FLOOR PLAN NORTH – FOOD SERVICE MECHANICAL PLAN		X	X
K6.01	GROUND FLOOR PLAN NORTH – FOOD SERVICE BLDG WORK PLAN		X	X
K7.01	GROUND FLOOR PLAN NORTH – FOOD SERVICE CONDUIT PLAN		X	X
K8.00	FOOD SERVICE EQUIPMENT PLAN			X
K8.01	FOOD SERVICE ELEVATIONS & DETAILS		X	X
K8.02	FOOD SERVICE ELEVATIONS & DETAILS		X	X
K8.03	FOOD SERVICE ELEVATIONS & DETAILS		X	X
K10.01	GROUND FLOOR (COFFEE BAR) FOODSERVICE EQUIP. PLAN & SCHEDULE			X
K10.02	GROUND FLOOR (COFFEE BAR) FOODSERVICE EQUIP. PLUMB & ELEC PLAN			X
K10.03	GROUND FLOOR (COFFEE BAR) FOODSERVICE EQUIP. MECH & B.WKS. PLAN			X
K10.04	GROUND FLOOR (COFFEE BAR) FOODSERVICE ELEVATIONS/ DETAILS			X

TELECOM/DATA (16 SHEETS)

T-000	GENERAL NOTES			X
T-001	SITE PLAN			X
T-100	BASEMENT REFLECTED CEILING PLAN			X
T-101	BASEPLAN 1			X
T-102	BASEPLAN 2			X
T-103	BASEPLAN 3			X
T-104	BASEPLAN 4			X
T-201	BASEPLAN 1 IDF ROOM LAYOUT			X
T-301	TELECOM RISER DIAGRAM			X
T-401	TELECOM DETAILS			X
T-501	TELECOM ENLARGED UNIT PLANS			X
T-502	TELECOM ENLARGED UNIT PLANS			X
T-503	TELECOM ENLARGED UNIT PLANS			X
T-504	TELECOM ENLARGED UNIT PLANS			X
T-505	TELECOM ENLARGED UNIT PLANS			X
T-506	TELECOM ENLARGED UNIT PLANS			X

AV (THEATER) (4 SHEETS)

AV0.0.1	AV GENERAL NOTES			X
AV2.0.1	BASEMENT THEATER AV PLANS			X
AV3.0.1	THEATER ELEVATIONS & SECTION			X
AV4.0.1	AV MOUNTING DETAILS			X

STRUCTURAL (28 SHEETS)

SHEET NUM.	SHEET DESCRIPTION	DD SUBMITTAL 12.13.06	02-05-2007	06-01-2007
S 0.01	GENERAL STRUCTURAL NOTES AND DRAWING INDEX	X	X	X
S 0.02	GENERAL STRUCTURAL NOTES CONTINUED	X	X	X
S 0.03	SYMBOLS AND ABBREVIATIONS	X	X	X
S 0.04	TYPICAL CONCRETE DETAILS	X	X	X
S 0.05	TYPICAL STEEL DETAILS	X	X	X
S 0.06	TYPICAL COLD FORMED STEEL DETAILS	X	X	X
S 0.07	TYPICAL COLD FORMED STEEL DETAILS	X	X	X
S 0.08	TYPICAL METAL DECK DETAILS	X	X	X
S 0.09	TYPICAL MASONRY DETAILS			X
S 1.01	GARAGE AND FOUNDATION PLAN (NORTH)	X	X	X
S 1.02	GARAGE AND FOUNDATION PLAN (SOUTH)	X	X	X
S 2.01A	GROUND FLOOR SLAB PLAN (NORTH)	X	X	X
S 2.01B	GROUND FLOOR SLAB PLAN (SOUTH)	X	X	X
S 2.02A	GROUND FLOOR PLAN (NORTH)	X	X	X
S 2.02B	GROUND FLOOR PLAN (SOUTH)	X	X	X
S 2.03A	SECOND FLOOR FRAMING PLAN (NORTH)	X	X	X
S 2.03B	SECOND FLOOR WALL PLAN (NORTH)	X	X	X
S 2.04	SECOND FLOOR PLAN (SOUTH)	X	X	X
S 2.05	THIRD FLOOR PLAN (NORTH)	X	X	X
S 2.06	THIRD FLOOR PLAN (SOUTH)	X	X	X
S 2.07	FOURTH FLOOR PLAN (NORTH)	X	X	X
S 2.08	FOURTH FLOOR PLAN (SOUTH)	X	X	X
S 2.09	ROOF PLAN (NORTH)	X	X	X
S 2.10	ROOF PLAN (SOUTH)	X	X	X
S 5.01	CONCRETE DETAILS	X	X	X
S 5.02	CONCRETE DETAILS	X	X	X
S 5.03	CONCRETE DETAILS			X
S 7.01	STEEL DETAILS			X

MECHANICAL (28 SHEETS)

M001	MECHANICAL SYMBOLS, ABBREVIATIONS AND GEN. NOTES	X	X	X
M002	TITLE 24		X	X
M003	TITLE 24		X	X
M004	TITLE 24		X	X
M005	MECHANICAL SCHEDULES	X	X	X
M006	MECHANICAL SCHEDULES		X	X
M2.01	MECHANICAL BASEMENT PLAN NORTH	X	X	X
M2.02	MECHANICAL BASEMENT PLAN SOUTH	X	X	X
M2.11	MECHANICAL GROUND FLOOR PLAN NORTH	X	X	X
M2.11A	MECHANICAL GROUND FLOOR PLAN (NORTH HYDRONIC PIPING)			X
M2.12	MECHANICAL GROUND FLOOR PLAN SOUTH	X	X	X
M2.21	MECHANICAL SECOND FLOOR PLAN NORTH	X	X	X
M2.22	MECHANICAL SECOND FLOOR PLAN SOUTH	X	X	X
M2.31	MECHANICAL THIRD FLOOR PLAN NORTH	X	X	X
M2.32	MECHANICAL THIRD FLOOR PLAN SOUTH	X	X	X
M2.41	MECHANICAL FOURTH FLOOR PLAN NORTH	X	X	X
M2.42	MECHANICAL FOURTH FLOOR PLAN SOUTH	X	X	X
M2.51	MECHANICAL ROOF FLOOR PLAN NORTH	X	X	X
M2.52	MECHANICAL ROOF FLOOR PLAN SOUTH	X	X	X
M3.01	MECHANICAL ENLARGED UNIT PLANS	X	X	X
M3.02	MECHANICAL ENLARGED UNIT PLANS	X	X	X
M3.03	MECHANICAL ENLARGED UNIT PLANS	X	X	X
M3.04	MECHANICAL ENLARGED UNIT PLANS	X	X	X
M3.05	MECHANICAL ENLARGED UNIT PLANS	X	X	X
M3.06	MECHANICAL ENLARGED UNIT PLANS	X	X	X
M4.01	MECHANICAL DETAILS		X	X
M4.02	MECHANICAL DETAILS		X	X
M4.03	MECHANICAL DETAILS		X	X

ELECTRICAL (41 SHEETS)

E0.01	ELECTRICAL GENERAL NOTES	X	X	X
E0.02	ELECTRICAL FIXTURE SCHEDULE	X	X	X
E0.03	TITLE 24		X	X
E0.10	ELECTRICAL SINGLE LINE DIAGRAM (UNITS)	X	X	X
E0.11	ELECTRICAL SINGLE LINE DIAGRAM (HOUSE)			X
E0.12	ELECTRICAL SINGLE LINE LOAD SCHEDULE			X
E1.01	ELECTRICAL SITE PLAN			X
E2.01	ELECTRICAL BASEMENT FLOOR PLAN NORTH	X	X	X
E2.02	ELECTRICAL BASEMENT FLOOR PLAN SOUTH	X	X	X
E2.11	ELECTRICAL FIRST FLOOR PLAN NORTH	X	X	X
E2.12	ELECTRICAL FIRST FLOOR PLAN SOUTH	X	X	X
E2.21	ELECTRICAL SECOND FLOOP PLAN NORTH	X	X	X
E2.22	ELECTRICAL SECOND FLOOP PLAN SOUTH	X	X	X
E2.31	ELECTRICAL THIRD FLOOR PLAN NORTH	X	X	X
E2.32	ELECTRICAL THIRD FLOOR PLAN SOUTH	X	X	X
E2.41	ELECTRICAL FOURTH FLOOR PLAN SOUTH	X	X	X
E2.42	ELECTRICAL FOURTH FLOOR PLAN NORTH	X	X	X
E2.51	ELECTRICAL ROOF PLAN NORTH	X	X	X
E2.52	ELECTRICAL ROOF PLAN SOUTH	X	X	X
E3.01	ELECTRICAL BASEMENT RCP (NORTH)	X	X	X
E3.02	ELECTRICAL BASEMENT RCP (SOUTH)	X	X	X
E3.11	ELECTRICAL FIRST RCP (NORTH)	X	X	X
E3.12	ELECTRICAL FIRST RCP (SOUTH)	X	X	X
E3.21	ELECTRICAL SECOND RCP (NORTH)	X	X	X
E3.22	ELECTRICAL SECOND RCP (SOUTH)	X	X	X
E3.31	ELECTRICAL THIRD RCP (NORTH)	X	X	X
E3.32	ELECTRICAL THIRD RCP (SOUTH)	X	X	X
E3.41	ELECTRICAL FOURTH RCP (NORTH)	X	X	X
E3.42	ELECTRICAL FOURTH RCP (SOUTH)	X	X	X
E4.01	GROUND FLOOR KITCHEN ELECTRICAL POWER PLAN		X	X
E4.02	GROUND FLOOR KITCHEN EQUIPMENT SCHEDULE		X	X
E5.01	ELECTRICAL DETAILS		X	X
E7.01	ELECTRICAL ENLARGED UNIT PLANS		X	X
E7.02	ELECTRICAL ENLARGED UNIT PLANS		X	X
E7.03	ELECTRICAL ENLARGED UNIT PLANS	X	X	X
E7.04	ELECTRICAL ENLARGED UNIT PLANS	X	X	X
E7.05	ELECTRICAL ENLARGED UNIT PLANS	X	X	X
E7.06	ELECTRICAL ENLARGED UNIT PLANS	X	X	X

ARCHITECTURAL (CONT'D)

SHEET NUM.	SHEET DESCRIPTION	DD SUBMITTAL 12.13.06	02-05-2007	06-01-2007
A4.05	BUILDING SECTIONS	X	X	X
A5.01	EXTERIOR WALL SECTIONS	X	X	X
A5.02	EXTERIOR WALL SECTIONS		X	X
A5.03	EXTERIOR WALL SECTIONS		X	X
A5.04	EXTERIOR WALL SECTIONS		X	X
A5.06	WALL SECTIONS DETAILS		X	X
A5.07	WALL SECTIONS DETAILS		X	X
A6.5.1	ROOF DETAILS			X
A6.5.2	ROOF DETAILS			X
A7.0.1	ENLARGED UNIT PLANS	X	X	X
A7.0.2	ENLARGED UNIT PLANS	X	X	X
A7.0.3	ENLARGED UNIT PLANS	X	X	X
A7.0.4	ENLARGED UNIT PLANS	X	X	X
A7.0.5	ENLARGED UNIT PLANS	X	X	X
A7.0.6	ENLARGED UNIT PLANS	X	X	X
A7.1.1	UNIT BATHROOM ELEVATIONS		X	X
A7.2.1	UNIT KITCHEN ELEVATIONS		X	X
A7.09	ENLARGED COMMON RESTROOM		X	X
A7.10.1	ELEVATORS PLANS & SECTIONS			X
A7.10.2	ELEVATORS PLANS & SECTIONS			X
A7.11.1	STAIR 1			X
A7.11.2	STAIR 2 & 7			X
A7.11.3	STAIR 3			X
A7.11.4	STAIR 4			X
A7.11.5	STAIR 5			X
A7.11.6	STAIR 6			X
A7.11.7	STAIR 8			X
A8.01	DOOR SCHEDULE	X	X	X
A8.02	UNIT FRAME AND DOOR TYPES	X	X	X
A8.03	WINDOW TYPES, SCHEDULE, AND FRAME TYPES	X	X	X
A8.04	EXTERIOR WALL DOOR DETAILS			X
A8.05	DOOR DETAILS			X
A8.6.1	WINDOW DETAILS		X	X
A8.6.2	WINDOW DETAILS		X	X
A8.2.1	WALL TYPES & SCHEDULE		X	X
A8.2.2	WALL TYPES			X
A8.2.3	WALL DETAILS			X
A9.0.0	OVERALL BASEMENT REFLECTED CEILING PLAN	X	X	X
A9.0.0-A	BASEMENT REFLECTED CEILING PLAN (NORTH)	X	X	X
A9.0.0-B	BASEMENT REFLECTED CEILING PLAN (SOUTH)	X	X	X
A9.1.0	OVERALL GROUND LEVEL REFLECTED CEILING PLAN	X	X	X
A9.1.0-A	GROUND LEVEL REFLECTED CEILING PLAN (NORTH)	X	X	X
A9.1.0-B	GROUND LEVEL REFLECTED CEILING PLAN (SOUTH)	X	X	X
A9.2.0	OVERALL SECOND LEVEL REFLECTED CEILING PLAN	X	X	X
A9.2.0-A	SECOND LEVEL REFLECTED CEILING PLAN (NORTH)	X	X	X
A9.2.0-B	SECOND LEVEL REFLECTED CEILING PLAN (SOUTH)	X	X	X
A9.3.0	OVERALL THIRD LEVEL REFLECTED CEILING PLAN	X	X	X
A9.3.0-A	THIRD LEVEL REFLECTED CEILING PLAN (NORTH)	X	X	X
A9.3.0-B	THIRD LEVEL REFLECTED CEILING PLAN (SOUTH)	X	X	X
A9.4.0	OVERALL FOURTH LEVEL REFLECTED CEILING PLAN	X	X	X
A9.4.0-A	FOURTH LEVEL REFLECTED CEILING PLAN (NORTH)	X	X	X
A9.4.0-B	FOURTH LEVEL REFLECTED CEILING PLAN (SOUTH)	X	X	X
A9.5.1	UNIT REFLECTED CEILING PLANS	X	X	X
A9.5.2	UNIT REFLECTED CEILING PLANS	X	X	X
A9.5.3	UNIT REFLECTED CEILING PLANS	X	X	X
A9.5.4	UNIT REFLECTED CEILING PLANS	X	X	X
A9.5.5	UNIT REFLECTED CEILING PLANS	X	X	X
A9.5.6	UNIT REFLECTED CEILING PLANS	X	X	X
A9.6.1	CEILING DETAILS			X
A9.6.2	CEILING DETAILS			X
A10.1.0	TYPICAL MOUNTING HEIGHTS			X
A11.01	INTERIOR ELEVATIONS			X
A11.02	INTERIOR ELEVATIONS			X
A11.03	INTERIOR ELEVATIONS			X
A11.04	INTERIOR ELEVATIONS			X
A11.6.1	INTERIOR DETAILS: MILLWORK DETAILS – PUBLIC AREAS			X
A11.6.2	INTERIOR DETAILS: MILLWORK DETAILS – PUBLIC AREAS			X
A11.6.3	INTERIOR DETAILS: MILLWORK DETAILS – UNITS			X
A11.6.4	INTERIOR DETAILS: FINISH, FLOOR TRANSITIONS			X
A12.00	OVERALL BASEMENT FLOOR FINISH PLAN	X	X	X
A12.00-A	BASEMENT FLOOR FINISH PLAN (NORTH)	X	X	X
A12.00-B	BASEMENT FLOOR FINISH PLAN (SOUTH)	X	X	X
A12.01	OVERALL GROUND FLOOR FINISH PLAN	X	X	X
A12.01-A	GROUND FLOOR FINISH PLAN (NORTH)	X	X	X
A12.01-B	GROUND FLOOR FINISH PLAN (SOUTH)	X	X	X
A12.02	OVERALL SECOND FLOOR FINISH PLAN	X	X	X
A12.02-A	SECOND FLOOR FINISH PLAN (NORTH)	X	X	X
A12.02-B	SECOND FLOOR FINISH PLAN (SOUTH)	X	X	X
A12.03	OVERALL THIRD FLOOR FINISH PLAN	X	X	X
A12.03-A	THIRD FLOOR FINISH PLAN (NORTH)	X	X	X
A12.03-B	THIRD FLOOR FINISH PLAN (SOUTH)	X	X	X
A12.04	OVERALL FOURTH FLOOR FINISH PLAN	X	X	X
A12.04-A	FOURTH FLOOR FINISH PLAN (NORTH)	X	X	X
A12.04-B	FOURTH FLOOR FINISH PLAN (SOUTH)	X	X	X
A12.05	UNIT FINISH PLANS	X	X	X
A12.06	UNIT FINISH PLANS	X	X	X
A12.07	UNIT FINISH PLANS	X	X	X
A12.08	UNIT FINISH PLANS	X	X	X
A12.09	UNIT FINISH PLANS	X	X	X
A12.10	UNIT FINISH PLANS	X	X	X
A13.00-A	BASEMENT FURNITURE & MILLWORK PLAN			X
A13.01	OVERALL GROUND FLOOR FURNITURE & MILLWORK PLAN			X
A13.01-A	GROUND FLOOR FURNITURE & MILLWORK PLAN (NORTH)			X

ARCHITECTURAL (GENERAL) (16 SHEETS)

SHEET NUM.	SHEET DESCRIPTION	DD SUBMITTAL 12.13.06	02-05-2007	06-01-2007
G0.00	COVER SHEET: DIRECTORY, MAPS & GENERAL BUILDING INFORMATION	X	X	X
G0.01A	CONDITIONAL USE PERMIT DOCUMENTS	X	X	X
G0.01B	CONDITIONAL USE PERMIT EXHIBIT E-3	X	X	X
G0.02	SHEET INDEX	X	X	X
G0.03	ABBREVIATIONS ARCHITECTURAL GENERAL NOTES & DIMENSIONING CONVENTIONS	X	X	X
G0.04	SYMBOLS AND MATERIAL DESIGNATOR	X	X	X
G0.05	TYPICAL ACCESSIBILITY DETAILS			X
G0.06	ACCESSIBILITY & SITE SIGNAGE DETAILS			X
G1.01	EXITING ANALYSIS, OCCUPANCY CALC., & GENERAL PROJECT DATA	X	X	X
G1.02	EXITING ANALYSIS, OCCUPANCY CALC., & GENERAL PROJECT DATA		X	X
G1.03	EXITING ANALYSIS, OCCUPANCY CALC., & GENERAL PROJECT DATA		X	X
G1.04	OPEN AREA ANALYSIS			X
G2.01	GENERAL NOTES	X		X
G2.02	ACCESSIBILITY NOTES	X		X
G2.03	ACCESSIBILITY NOTES	X		X
G2.04	SITE DETAILS			X

CIVIL (6 SHEETS)

C0.00	GENERAL NOTES	X	X	X
C0.01	DEMOLITION PLAN	X	X	X
C0.02	EXCAVATION PLAN	X	X	X
C0.03	GRADING AND DRAINAGE PLAN	X	X	X
C0.04	DETAILS	X	X	X
C0.05	UTILITY PLAN	X	X	X
C0.06	SURVEY			X

LANDSCAPE (14 SHEETS)

L1.00	COVER SHEET		X	
~~L1.01~~	~~HARDSCAPE PLAN~~	~~X~~	~~X~~	
~~L1.02~~	~~HARDSCAPE PLAN~~	~~X~~	~~X~~	
~~L1.03~~	~~HARDSCAPE PLAN~~	~~X~~	~~X~~	
~~L1.04~~	~~HARDSCAPE PLAN~~	~~X~~	~~X~~	
~~L1.05~~	~~HARDSCAPE SECTION/ ELEVATION~~	~~X~~	~~X~~	
~~L1.06~~	~~HARDSCAPE SECTION/ ELEVATION~~	~~X~~	~~X~~	
~~L1.07~~	~~HARDSCAPE SECTION/ ELEVATION~~	~~X~~	~~X~~	
~~L1.08~~	~~HARDSCAPE SECTION/ ELEVATION~~	~~X~~	~~X~~	
~~L1.09~~	~~HARDSCAPE DETAILS~~	~~X~~	~~X~~	
~~L1.10~~	~~HARDSCAPE DETAILS~~	~~X~~	~~X~~	
~~L1.11~~	~~HARDSCAPE DETAILS~~	~~X~~	~~X~~	
L1.01	IRRIGATION PLAN	X	X	X
L1.02	IRRIGATION PLAN	X	X	X
L1.03	IRRIGATION PLAN	X	X	X
L1.04	IRRIGATION PLAN	X	X	X
L1.05	IRRIGATION LEGEND			X
L1.06	IRRIGATION DETAILS	X	X	X
L1.07	IRRIGATION DETAILS	X	X	X
L2.00	PLANTING LEGEND AND NOTES			X
L2.01	PLANTING PLAN	X	X	X
L2.02	PLANTING PLAN	X	X	X
L2.03	PLANTING PLAN	X	X	X
L2.04	PLANTING PLAN	X	X	X
L2.05	PLANTING DETAILS	X	X	X
L2.06	PLANTING DETAILS			X

ARCHITECTURAL (134 SHEETS)

A1.01	REFERENCE SITE PLAN	X	X	X
A1.02	SITE PLAN	X	X	X
A1.04	SITE FEATURES-RETAINING WALL			X
A1.05	COURTYARD & ENTRANCE CANOPY PLAN	X	X	X
A1.06	ENLARGED COURTYARD PLANS			X
A1.07	ENLARGED COURTYARD PLANS			X
A1.08	HARDSCAPE DETAILS			X
A2.0.0	OVERALL BASEMENT SLAB PLAN			X
A2.0.0-A	BASEMENT SLAB PLAN (NORTH)			X
A2.0.0-B	BASEMENT SLAB PLAN (SOUTH)			X
A2.1.0	OVERALL GROUND FLOOR SLAB PLAN			X
A2.1.0-A	GROUND FLOOR SLAB PLAN (NORTH)			X
A2.1.0-B	GROUND FLOOR SLAB PLAN (SOUTH)			X
A2.0.1	OVERALL GARAGE PLAN (BASEMENT)	X	X	X
A2.0.1-A	GARAGE PLAN (NORTH)	X	X	X
A2.0.1-B	GARAGE PLAN (SOUTH)	X	X	X
A2.1.1	OVERALL GROUND FLOOR PLAN	X	X	X
A2.1.1-A	GROUND FLOOR PLAN (NORTH)	X	X	X
A2.1.1-B	GROUND FLOOR PLAN (SOUTH)	X	X	X
A2.2.1	OVERALL SECOND FLOOR PLAN	X	X	X
A2.2.1-A	SECOND FLOOR PLAN (NORTH)	X	X	X
A2.2.1-B	SECOND FLOOR PLAN (SOUTH)	X	X	X
A2.3.1	OVERALL THIRD FLOOR PLAN	X	X	X
A2.3.1-A	THIRD FLOOR PLAN (NORTH)	X	X	X
A2.3.1-B	THIRD FLOOR PLAN (SOUTH)	X	X	X
A2.4.1	OVERALL FOURTH FLOOR PLAN	X	X	X
A2.4.1-A	FOURTH FLOOR PLAN (NORTH)	X	X	X
A2.4.1-B	FOURTH FLOOR PLAN (SOUTH)	X	X	X
A2.5.1	OVERALL ROOF PLAN	X	X	X
A2.5.1-A	ROOF PLAN (NORTH)	X	X	X
A2.5.1-B	ROOF PLAN (SOUTH)	X	X	X
A3.01	ELEVATIONS	X	X	X
A3.02	ELEVATIONS EAST	X	X	X
A3.03	ELEVATIONS WEST	X	X	X
A3.04	ELEVATIONS NORTH & SOUTH	X	X	X
A3.05	COURTYARD ELEVATIONS	X	X	X
A3.06	COURTYARD ELEVATIONS	X	X	X
A4.01	TRANSVERSE SECTIONS/ COURTYARD ELEVATIONS	X	X	X
A4.02	TRANSVERSE SECTIONS/ COURTYARD ELEVATIONS	X	X	X
A4.03	LONGITUDINAL SECTIONS	X	X	X
A4.04	BUILDING SECTIONS	X	X	X

Sheet Index

Scale 1 –.DWG

WWC OT
Widom Wein Cohen O'Leary Terasawa

3130 Wilshire Boulevard
Sixth Floor
Santa Monica, California 90403
T (310) 828-0040
F (310) 453-9432
www.wwcot.com

Inland Empire
Palm Springs
Moorpark
Shanghai, China

RECEIVED
10:08 am, Aug 14, 2008
FRAMEMAX

Building Department Submittal: June 1, 2007
Issued For Bid:
Issued For Construction:

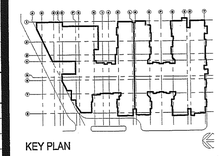

KEY PLAN

Project:
Jewish Home for The Aging
FOUNTAINVIEW AT EISENBERG VILLAGE
6440 Wilbur Ave
Reseda, CA. 91335

JEWISH HOME
JEWISH HOME FOR THE AGING
18855 Victory Blvd.
Reseda, CA 91335

Project Number: 04206.00

Symbols, Sheet Index, and Material Designator:

Date: 04/05/2007
Drawn By:
Checked By:

G0.02
Sheet No.

RECEIVED BY SUFFOLK ON 06/01/07

A

AAP	AREA ALARM PANEL
AB	ANCHOR BOLT
ABV	ABOVE
AC	ASPHALT CONCRETE
ACC	ACCESSIBILITY
ACOUS	ACOUSTICAL
ACT	ACOUSTICAL CEILING TILE
AD	AREA DRAIN
ADDL	ADDITIONAL
ADH	ADHESIVE
ADJ	ADJUSTABLE
AFF	ABOVE FINISH FLOOR
AFG	ABOVE FINISH GRADE
AFS	ABOVE FINISH SLAB
AGGR	AGGREGATE
AHR	ANCHOR
AL	ALUMINUM
ALT	ALTERNATE
ANOD	ANODIZED
AP	ACCESS PANEL
APPROX	APPROXIMATE(LY)
ARCH	ARCHITECT(URAL)
ASPH	ASPHALT
AUTO	AUTOMATIC

B

BB	BULLETIN BOARD
BD	BOARD
BET	BETWEEN
BG	BUMPER GUARD
BITUM	BITUMINOUS
BKG	BACKING
BLDG	BUILDING
BLK	BLOCK
BLKG	BLOCKING
BLW	BELOW
BM	BEAM
BOT	BOTTOM
BRKT	BRACKET
BSMT	BASEMENT
BURS	BUILT UP ROOFING SYSTEM

C

CAB	CABINET
CARP	CARPET
CB	CATCH BASIN
CCT	CUBICLE CURTAIN TRACK
CCTV	CLOSE CIRCUIT TELEVISION
CD	CORNER GUARD
CEM	CEMENT
CEM PLAS	CEMENT PLASTER
CER	CERAMIC
CER TILE	CERAMIC TILE
CFE	CONTRACTOR FURNISHED EQUIPMENT
CG	CORNER GUARD
CH BD	CHALKBOARD
CI	CAST IRON
CL	CENTER LINE
CLG	CEILING
CLJ	CONTROL JOINT
CLR	CLEAR
CMU	CONCRETE MASONRY UNIT
CNTR	COUNTER
CO	CASED OPENING
COL	COLUMN
CONC	CONCRETE
CONF	CONFERENCE
CONN	CONNECTION
CONSTR	CONSTRUCTION
CONT	CONTINUOUS
CORR	CORRIDOR
CSK	COUNTERSUNK
CSP	COMBINATION STANDPIPE
CSWK	CASEWORK
CT	CURTAIN TRACK
CUST	CUSTOM
CW	COLD WATER

D

DA	DISABLE ACCESSIBILITY
D-W	DISTILLED WATER
DI-W	DEIONIZED WATER
DBL	DOUBLE
DBL ACT	DOUBLE ACTING
DEMO	DEMOLISH
DET	DETAIL
DF	DRINKING FOUNTAIN
DIA	DIAMETER
DIAG	DIAGONAL
DIFF	DIFFUSER
DIM	DIMENSION
DIM PT	DIMENSION POINT
DISP	DISPENSER
DIST	DISTANCE
DLV	DOOR LOUVER
DMPF	DAMPPROOFING
DN	DOWN
DOP	DOOR OPENING
DR	DRAIN
DS	DOWNSPOUT
DSP	DRY STANDPIPE
DT	DRAIN TILE, DRAPERY TRACK
DWG	DRAWING
DWGS	DRAWINGS
DWR	DRAWER
DWTR	DUMBWAITER

E

(E)	EXISTING
E	EAST
EA	EACH
ECAB	ELECTRICAL CABINET
EDR	EQUIPMENT DRAIN
EF	EACH FACE
EG	EDGE GUARD
EIFS	EXTERIOR INSULATION FINISH SYSTEM
EL	ELEVATION
ELAST	ELASTOMERIC
ELEC	ELECTRICAL
ELEV	ELEVATOR
EMER	EMERGENCY
EMR SHR	EMERGENCY SHOWER
ENCL	ENCLOSURE
ENGR	ENGINEER
EO	ELECTRICAL OUTLET
EOS	EDGE OF SLAB
EP	ELECTRICAL PANEL
EPDM	ETHYLENE PROPYLENE DIENE MONOMER
EPRF	EXPLOSION PROOF
EQ	EQUAL
EQL SP	EQUALLY SPACED
EQUIP	EQUIPMENT
EQUIV	EQUIVALENT
ESCAL	ESCALATOR
EWC	ELECTRIC WATER COOLER
EXP	EXPANSION
EXP BT	EXPANSION BOLT
EXP JT	EXPANSION JOINT
EXPO	EXPOSED
EXST	EXISTING
EXST GR	EXISTING GRADE
EXT	EXTERIOR
EXTR	EXTRUSION

F

F/F	FACE TO FACE
FA	FIRE ALARM
FAWS	FLUID-APPLIED WATERPROOFING SYSTEM
FB	FLAT BAR
FBD	FIBERBOARD
FCU	FAN COIL UNIT
FD	FLOOR DRAIN
FDC	FIRE DEPARTMENT CONNECTION
FDN	FOUNDATION
FDV	FIRE DEPARTMENT VALVE
FEB	FIRE EXTINGUISHER BRACKET
FEC	FIRE EXTINGUISHER CABINET
FEXT	FIRE EXTINGUISHER
FF	FINISH FLOOR
FHC	FIRE HOSE CABINET
FH/FEC	FIRE HOSE/FIRE EXTINGUISHER CABINET
FHMS	FLAT HEAD MACHINE SCREW
FHWS	FLAT HEAD WOOD SCREW
FHV	FIRE HOSE VALVE
FHY	FIRE HYDRANT
FIN	FINISH
FIN FL	FINISH FLOOR
FIN GR	FINISH GRADE
FL	FLOOR(ING)
FLAM	FLAMMABLE
FLASH	FLASHING
FLEX	FLEXIBLE
FLR SK	FLOOR SINK
FLUOR	FLUORESCENT
FNR	FEMININE NAPKIN RECEPTACLE
FNTD	FEMININE NAPKIN-TAMPON DISPENSER
FOC	FACE OF CONCRETE
FOF	FACE OF FINISH
FOM	FACE OF MASONRY
FOP	FACE OF PARTITION ASSEMBLY
FOS	FACE OF STUDS
FRPF	FIREPROOFING
FRZR	FREEZER
FR SNK	FLUSHING RIM SINK
FS	FULL SIZE
FSB	FOLDING SHOWER BENCH
FSTNR	FASTENER
FT	FOOT, FEET
FTG	FOOTING
FURN	FURNITURE
FURR	FURRING
FUS	FOLDING UTILITY SEAT
FUT	FUTURE
FXTR	FIXTURE

G

G	GAS
GA	GAUGE, GAGE
GALV	GALVANIZED
GALVI	GALVANIZED IRON
GALVS	GALVANIZED STEEL
GB	GRAB BAR
GC	GENERAL CONTRACTOR
GFRC	GLASS-FIBER REINFORCED CONCRETE
GFRG	GLASS-FIBER REINFORCED GYPSUM
GL	GLASS
GL BLK	GLASS BLOCK
GLU LAM	GLUE LAMINATED
GLZ	GLAZING
GND	GROUND
GR	GRADE OR GRADING
GRV	GRAVITY ROOF VENTILATOR
GVL	GRAVEL
GYP BD	GYPSUM BOARD
GYP PLAS	GYPSUM PLASTER

H

H	HIGH
HAGL	HEAT ABSORBING GLASS
HB	HOSE BIBB
HC	HOLLOW CORE
HCP	HANDICAP, HANDICAPPED
HD	HEAD
HDBD	HARDBOARD
HDWD	HARDWOOD
HDWE	HARDWARE
HGT	HEIGHT
HM	HOLLOW METAL
HNDRL	HANDRAIL
HORIZ	HORIZONTAL
HPT	HIGH POINT
HR	HOUR
HVAC	HEATING-VENTILATION-AIR CONDITIONING
HVP	HARDWOOD VENEER PLYWOOD
HW	HOT WATER

I - J - K

ID	INSIDE DIAMETER
INCAND	INCANDESCENT
INCL	INCLUDE, INCLUDING
INFO	INFORMATION
INSTL	INTERSTITIAL
INSUL	INSULATION
INTR	INTERIOR
IPS	INSIDE PIPE SIZE
IVT	INTRAVENOUS TRACK
JAN	JANITOR
JB	JUNCTION BOX
JT	JOINT
KCP	KEENE'S CEMENT PLASTER
KIT	KITCHEN
KPL	KICK PLATE
KS	KNEE SPACE

L

LAB	LABORATORY
LAM	LAMINATION
LAV	LAVATORY
LB	POUND
LC	LINEN CHUTE
LCD	LINEAR CEILING DIFFUSER
LF	LINEAR FOOT
LG	LENGTH
LGL	LEADED GLASS
LH	LEFT HAND
LIN	LINEAR
LKRS	LOCKERS
LL	LEAD LINED
LONG	LONGITUDINAL
LP	LIGHT PROOF
LPT	LOW POINT
LT	LIGHT
LT WT	LIGHT WEIGHT
LTG	LIGHTING

M

M-AIR	MEDICAL GAS SYSTEM - AIR
M-VAC	MEDICAL GAS SYSTEM - VACUUM
M-G	MEDICAL GAS SYSTEM - GAS
MACH	MACHINE
MAN	MANUAL
MATL	MATERIAL
MATV	MASTER ANTENNA TELEVISION SYSTEM
MAX	MAXIMUM
MB	MACHINE BOLT
MC	MEDICINE CABINET
MDO	MEDIUM DENSITY OVERLAY
MECH	MECHANICAL
MEMB	MEMBRANE
MET	METAL
MFR	MANUFACTURER
MGVB	MEDICAL GAS SHUTOFF & ALARM BOX
MH	MANHOLE
MH/S	MOP HOLDER WITH SHELF
MIN	MINIMUM
MIR	MIRROR
MISC	MISCELLANEOUS
ML	METAL LATH
MO	MASONRY OPENING
MOD	MODULE, MODULAR
MTD	MOUNTED
MTG	MOUNTING
MULL	MULLION

N

(N)	NEW
N	NORTH
NA	NOT APPLICABLE
NAT	NATURAL
NIC	NOT IN CONTRACT
NO	NUMBER
NOM	NOMINAL
NPS	NOMINAL PIPE SIZE
NRC	NOISE REDUCTION COEFFICIENT
NTS	NOT TO SCALE

O

OA	OVERALL
OB	OBSCURE
OC	ON CENTER
OD	OUTSIDE DIAMETER
OFCI	OWNER FURNISHED-CONTRACTOR INSTALLED
OFOI	OWNER FURNISHED-OWNER INSTALLED
OH	OPPOSITE HAND
OPNG	OPENING
OPP	OPPOSITE
ORD	OVERFLOW ROOF DRAIN
OVHD	OVERHEAD
OXY	OXYGEN

P

PA	PUBLIC ADDRESS
PBD	PARTICLEBOARD
PBX	PRIVATE TELEPHONE EXCHANGE
PC	PORTLAND CEMENT
PCD	PAPER CUP DISPENSER
PCF	POUNDS PER CUBIC FOOT
PDF	POWDER DRIVEN FASTENER
PE	PORCELAIN ENAMEL
PERF	PERFORATED
PERIM	PERIMETER
PERM	PERMANENT
PERP	PERPENDICULAR
PI	POINT OF INTERSECTION
PL	PLATE OR PROPERTY LINE
PLAM	PLASTIC LAMINATE
PLAS	PLASTER
PLAT	PLATFORM
PLBG	PLUMBING
PLF	POUNDS PER LINEAR FOOT
PLYWD	PLYWOOD
PMRS	PREFORMED METAL ROOFING SYSTEM
PNEU	PNEUMATIC
PNL	PANEL
PNL BD	PANEL BOARD
PORT	PORTABLE
PP	PUSH PLATE
PPM	PARTS PER MILLION
PR	PAIR
PREFAB	PREFABRICATED
PRKG	PARKING
PROJ	PROJECT
PROP	PROPERTY
PS CONC	PRESTRESSED CONCRETE
PSF	POUNDS PER SQUARE FOOT
PSI	POUNDS PER SQUARE INCH
PT	POINT
PTD	PAPER TOWEL DISPENSER
PTD/R	PAPER TOWEL DISPENSER & RECEPTACLE
PTN	PARTITION
PTR	PAPER TOWEL RECEPTACLE
PTS	PNEUMATIC TUBE SYSTEM
PT STA	PNEUMATIC TUBE STATION
PVC	POLYVINYL CHLORIDE
PVG	PAVING
PVMT	PAVEMENT
PWR	POWER

Q - R

QT	QUARRY TILE
QTR	QUARTER
QTY	QUANTITY
R	RISER
RA	RETURN AIR
RAD	RADIUS
RCP	REFLECTED CEILING PLAN
RD	ROOF DRAIN
REF	REFERENCE
REFR	REFRIGERATOR
REG	REGISTER
REINF	REINFORCE (D) (ING) (MENT)
REQD	REQUIRED
RESIL	RESILIENT
RET	RETURN
REV	REVISION
RH	RIGHT HAND
RHMS	ROUND HEAD MACHINE SCREW
RHWS	ROUND HEAD WOOD SCREW
RL	ROOF LEADER
RM	ROOM
RND	ROUND
RO	ROUGH OPENING
ROW	RIGHT OF WAY
RWL	RAIN WATER LEADER

S

S	SOUTH
SA	SUPPLY AIR
SB	SPLASH BLOCK
SC	SOLID CORE
SCD	SEAT COVER DISPENSER
SCHED	SCHEDULE
SCR	SHOWER CURTAIN ROD
SCRN	SCREEN
SD	SOAP DISH
SDL	SOAP DISPENSER, LIQUID
SDP	SOAP DISPENSER, POWDER
SECT	SECTION
SEG	SEGMENT
SEP	SEPARATION OR SEPARATE
SJ	SEPARATION JOINT
SHR	SHOWER
SHT	SHEET, SHEETING
SHV	SHELVES, SHELVING
SIM	SIMILAR
SK	SINK
SL	SLOPE
SMS	SHEET METAL SCREW
SP	SPACE, SPACED, SPACING
SPEC	SPECIFICATION
SPKLR	SPRINKLER
SPKR	SPEAKER
SQ	SQUARE
SQ FT	SQUARE FOOT
SQ IN	SQUARE INCH
SS	SANITARY SEWER
SSK	SERVICE SINK
SST	STAINLESS STEEL
ST	STREET
STC	SOUND TRANSMISSION CLASS
STD	STANDARD
STL	STEEL
STOR	STORAGE
STRUCT	STRUCTURAL
STRUCT STL	STRUCTURAL STEEL
STS	SELF-TAPPING SCREW
SUSP	SUSPENDED
SUSP CLG	SUSPENDED CEILING
SVCE	SERVICE
SYMM	SYMMETRICAL

T

T	TREAD
T&B	TOP AND BOTTOM
T&G	TONGUE AND GROOVE
TB	TOWEL BAR
TC	TOP OF CONCRETE, TOP OF CURB
TEL	TELEPHONE
TEMP	TEMPORARY
TER	TERRAZZO
THERM	THERMAL
THK	THICK, THICKNESS
THRES	THRESHOLD
THRU	THROUGH
TK BD	TACK BOARD
TMPD GL	TEMPERED GLASS
TOL	TOLERANCE
TOT	TOTAL
TOSHTG	TOP OF SHEATING
TOP	TOP OF PRAPET
TOR	TOP OF ROOF
TP	TOP OF PAVEMENT
TPD	TOILET PAPER DISPENSER
TPH	TOILET PAPER HOLDER
TSL	TOP OF SLAB
TST	TOP OF STEEL
TTB	TELEPHONE TERMINAL BOARD
TV	TELEVISION
TW	TOP OF WALL
TYP	TYPICAL

U

UC	UNDER COUNTER
UNEX	UNEXCAVATED
UNFIN	UNFINISHED
UON	UNLESS OTHERWISE NOTED
UPS	UNINTERRUPTIBLE POWER SUPPLY
UR	URINAL
UTIL	UTILITY

V

VAC	VACUUM
VB	VINYL BASE
VCO	VACUUM CLEANER OUTLET
VCT	VINYL COMPOSITION TILE
VERT	VERTICAL
VEST	VESTIBULE
VFAT	VINYL FACED ACOUSTIC TILE
VIF	VERIFY IN FIELD
VNR	VENEER
VNR PLAS	VENEER PLASTER
VOL	VOLUME
VTR	VENT THROUGH ROOF
VWC	VINYL WALL COVERING

W

W	WEST
W/	WITH
W/O	WITH OUT
W/W	WALL TO WALL
WAU	WALL ASH URN
WC	WATER CLOSET
WD	WOOD
WDW	WINDOW
WF	WIDE FLANGE
WGL	WIRE GLASS
WHCH	WHEELCHAIR
WO	WHERE OCCURS
WP	WORKING POINT
WR	WATER RESISTANT
WSCT	WAINSCOT
WSP	WET STANDPIPE
WT	WEIGHT
WTRPRF	WATERPROOFING
WVF	WELDED SHEET VINYL FLOORING
WWF	WELDED WIRE FABRIC

X - Y - Z

XFMR	TRANSFORMER
ZV	ZONE VALVE BOX (RECESSED)

SYMBOLS AS ABBREVIATIONS

∠	ANGLE
@	AT
℄	CENTER LINE
°	DEGREE(S) OF ANGULAR MEASURE
ø	DIAMETER
=	EQUAL
>	GREATER THAN
<	LESS THAN
||	PARALLEL
⊾	PERPENDICULAR
±	PLUS OR MINUS (TOLERANCE)
#	POUND(S)
ℙ	PROPERTY LINE
'	FOOT OR FEET
"	INCH OR INCHES

ARCHITECTURAL ABBREVIATIONS — Scale 9

1. THE FOLLOWING GENERAL NOTES APPLY TO ALL ARCHITECTURAL DRAWINGS. FOR NOTES APPLICABLE TO ALL DRAWINGS OF ALL DISCIPLINES, REFER TO THE "GENERAL NOTES" - SEE INDEX OF DRAWINGS.

2. ALL PARTS OF THE WORK - INCLUDING MATERIALS, METHODS, ASSEMBLIES, ETC - MUST COMPLY WITH THE MIN REQUIREMENTS OF THE GOVERNING REGULATIONS OF ALL FEDERAL, STATE, DISTRICT, AND LOCAL AUTHORITIES HAVING JURISDICATION OVER THE PROJECT AS WELL AS THOSE GREATER REQUIREMENTS INDICATED BY THE CONTRACT DOCUMENTS. NO PART OF THE CONTRACT DOCUMENTS MAY BE CONSTRUED TO REQUIRE OR PERMIT WORK CONTRARY TO A GOVERNING REGULATION.

3. THE ARCHITECTURAL DRAWINGS ARE A PART OF A LARGER SET OF DRAWINGS WHICH, WHEN COMPLETE, CONSISTS OF ALL DRAWINGS LISTED BY THE INDEX OF DRAWINGS. THE WORK DESCRIBED BY THE DRAWINGS OF ANY ONE DISCIPLINE MAY BE AFFECTED BY THE WORK DESCRIBED ON DRAWINGS OF ANOTHER DISCIPLINE AND MAY REQUIRE REFERENCE TO THE DRAWINGS OF ANOTHER DISCIPLINE. PARTIAL SETS OF DRAWINGS ARE INCOMPLETE AND SHOULD NOT BE DISTRIBUTED OR UTILIZED BY THE CONTRACTOR. IT IS THE CONTRACTOR'S RESPONSIBILITY TO REVIEW AND COORDINATE THE WORK OF ALL SUBCONTRACTORS, TRADES, AND SUPPLIERS WITH THE REQUIREMENTS OF THE CONTRACT DOCUMENTS BEFORE COMMENCING CONSTRUCTION, AND TO ASSURE THAT ALL PARTIES ARE AWARE OF ALL REQUIREMENTS, REGARDLESS OF WHERE THE REQUIREMENTS OCCUR IN THE CONTRACT DOCUMENTS, WHICH MIGHT AFFECT THE WORK OF THAT PARTY.

4. AS PART OF THE CONTRACTOR'S RESPONSIBILITY TO COORDINATE THE WORK OF ALL SUBCONTRACTORS, TRADES, AND SUPPLIERS, THE CONTRACTOR SHALL ENDEAVOR TO IDENTIFY AND NOTIFY THE ARCHITECT OF ANY CONFLICTS BETWEEN THE WORK OF DIFFERENT PARTIES AT THE EARLIEST POSSIBLE DATE SO AS TO ALLOW REASONABLE AND ADEQUATE TIME FOR THE CONFLICT TO BE RESOLVED WITHOUT DELAYING THE WORK. ALL DEVIATIONS FROM THAT WHICH IS REQUIRED BY THE CONTRACT DOCUMENTS MUST BE APPROVED IN ADVANCE BY THE ARCHITECT.

5. THE ARCHITECTURAL DRAWINGS ESTABLISH AND COORDINATE THE FINISHED APPEARANCE AND EXACT LOCATION OF ALL EXPOSED ELEMENTS OF THE WORK OF ALL TRADES, INCLUDING THAT WORK WHICH IS ILLUSTRATED PRIMARILY ON DRAWINGS OF OTHER DISCIPLINES. LOCATIONS SHOWN ON OTHER DRAWINGS ARE SCHEMATIC, UNLESS OTHERWISE NOTED ON THE ARCHITECTURAL DRAWINGS. THE ARCHITECTURAL DRAWINGS TAKE PRECEDENCE FOR THE FINISHED APPEARANCE AND EXACT LOCATION OF ALL PARTS OF THE WORK. EXCEPTION: DIMENSIONED LOCATIONS SHOWN ON DRAWINGS OF OTHER DISCIPLINES SHALL GOVERN ONLY WHERE: SPECIFICALLY AND INDIVIDUALLY INDICATED BY

A. SYMBOL, KEYED NOTE, OR NOTATION ON THE ARCHITECTURAL DRAWINGS. OCCURRING WITHIN A ROOM OR OTHER IDENTIFIED

B. SPACE FOR WHICH ARCH SHEET OR SCHEDULE NOTES INDICATE THAT DIMENSIONS PROVIDED ELSEWHERE SHALL GOVERN.

6. THE ARCHITECTURAL FLOOR PLANS, REFLECTED CEILING PLANS, SECTIONS, AND ELEVATIONS ILLUSTRATE THE EXACT LOCATION OF MANY, BUT NOT ALL, EXPOSED PARTS OF THE WORK. APPLY THE RULES INDICATED BY THE DRAWING "TYPICAL RULES FOR DETERMINING MOUNTING HEIGHTS AND LOCATIONS" TO DETERMINE THE EXACT LOCATION OF EACH EXPOSED PART OF THE WORK.

7. REFER TO THE STRUCTURAL, MECHANICAL, ELECTRICAL, AND PLUMBING DRAWINGS FOR THE DETAILED DESIGN OF STRUCTURAL, MECHANICAL, ELECTRICAL, AND PLUMBING SYSTEMS, OF WHICH PORTIONS MAY BE SHOWN ON THE ARCHITECTURAL DRAWINGS.

8. NOT USED

9. FINISH FLOOR ELEVATIONS ARE TO TOP OF CONCRETE FLOOR SLAB, UON. WHERE THE CONCRETE IS DEPRESSED TO ACCOMMODATE MORTAR BEDS, SETTING BEDS, RAISED ACCESS FLOORS, AND OTHER SIMILAR FLOOR ASSEMBLIES, FINISHED FLOOR ELEVATIONS ARE TO TOP OF FINISH FLOOR ASSEMBLY INDICATED. CEILING HEIGHT DIMENSIONS ARE TO FINISHED SURFACES, UNLESS OTHERWISE NOTED. REFER TO REFLECTED CEILING PLAN SHEET NOTES (A9 SERIES) FOR CEILING HEIGHTS.

10. FOR TYPICAL DIMENSIONING CONVENTIONS, INCLUDING RULES FOR LOCATING DOORS WHICH HAVE NOT BEEN DIMENSIONED, REFER TO THE "DIMENSIONING CONVENTIONS" NOTES ON THIS SHEET.

11. FOR ILLUSTRATION AND DEFINITION OF TYP SYMBOLS USED ON THE ARCHITECTURAL DRAWINGS, SEE SHEET G0.04.

12. ADDITIONAL SYMBOLS, NOT SHOWN OR DEFINED ON THE DRAWING "ARCHITECTURAL SYMBOLS", MAY OCCUR AND ARE DEFINED ON OTHER ARCH DRAWINGS.

13. BASIC FIRE PROTECTION AND EXITING CONCEPTS ARE ILLUSTRATED. REFER TO THE INDEX OF DRAWINGS FOR THE LOCATION OF ADDITIONAL FLOOR PLANS, CEILING PLANS, BUILDING SECTIONS, WALL SECTIONS, ELEVATIONS, SCHEDULES, AND DETAILS.

14. WALL INSULATION:
A. ALL EXTERIOR WALLS TO BE INSULATED WITH R-19. BATT INSULATION.

B. ALL ROOFS OVER CONDITIONED SPACES TO HAVE A MINIMUM OF R-19 INSULATION VALUE AS SPECIFIED.

C. CONTRACTOR TO PROVIDE R-11 BATT INSULATION AT INSIDE FACE OF HORIZONTAL "W" BEAMS IN EXTERIOR BUILDING PERIMETER WALLS.

15. ALL EXTERIOR WALLS TO HAVE 6", 20-GA. MTL. GALVANIZED STUDS @ 16" OC, U.O.N. ON WALL TYPE SCHEDULE.

16. DUCT ENCLOSURES: SEE MECHANICAL AND ARCHITECTURAL DRAWINGS AND DETAILS.

17. ROOM NAMES AND NUMBERS NOTED ON THE CONTRACT DRAWINGS MAY NOT REPRESENT THE FINAL ROOM NAMES AND NUMBERS TO BE INSTALLED UNDER THE SIGNAGE DRAWINGS. CONTRACTOR TO COORDINATE WITH OWNER FINAL NUMBER AND GRAPHICS.

18. CAULKING NOTE: CAULKING CAVITY SHALL BE NO LARGER THAN ⅜" WITH BACKER ROD.

19. ALL EXTERIOR BUILDING WALLS SHALL BE PROVIDED WITH ½" GYPSUM SHEATHING / BACKING BOARD AS SPECIFIED IN SECTION 09220, REGARDLESS OF WHETHER THE BACKING BOARD IS SHOWN IN DETAILS OR NOT.

ARCHITECTURAL GENERAL NOTES — Scale 3

1. EXCEPT WHERE DIRECTED TO PLACE ITEMS OF THE WORK AT THE "APPROXIMATE LOCATION SHOWN," DO NOT SCALE DRAWINGS FOR DIMENSIONAL INFORMATION. ALL ELEMENTS OF THE DRAWINGS MAY NOT BE DRAWN TO EXACT SCALE. ALL DIMENSIONS REQUIRED ARE SHOWN, OR MAY BE DERIVED FROM THOSE SHOWN, ON THE FLOOR PLANS, DETAIL PLANS, ELEVATIONS, SECTIONS, DETAILS, SCHEDULES, AND SPECIFICATIONS. SEE NOTES ON THIS SHEET AND SYMBOLS ON THE "ARCHITECTURAL SYMBOLS" DRAWING FOR DIMENSIONS CONVENTIONS USED ON THIS PROJECT.

2. EXCEPT WHERE SPECIFICALLY NOTED TO THE CONTRARY, ALL DIMENSIONS SHOWN ON THE ARCHITECTURAL DRAWINGS CONFORM TO THE FOLLOWING CONVENTIONS:

A. DIMENSIONS UTILIZING THE "CENTERLINE" SYMBOL ARE MEASURED TO:

- STRUCTURAL OR DIMENSIONAL GRID LINES.
- CENTERLINE OF CONCRETE OR CONC MASONRY UNIT WALL (EXCLUSIVE OF APPLIED FINISHES HAVING THICKNESS OR FURRING). REFER TO THE ARCHITECTURAL PLANS AND SECTIONS, THE STRUCTURAL DRAWINGS, OR THE PARTITION SCHEDULE TO DETERMINE THE THICKNESS OF CONCRETE OR CONCRETE MASONRY UNIT WALLS.
- CENTERLINE OF PARTITION ASSEMBLY (EXCLUSIVE OF ANY APPLIED FINISHES HAVING THICKNESS WHICH MAY BE ADDED TO SUCH WALLS) AT PARTITIONS FRAMED WITH METAL STUDS. REFER TO "PARTITION SCHEDULE" TO DETERMINE THE THICKNESS OF EACH PARTITION ASSEMBLY TYPE.
- CENTERLINE OF DOOR, WINDOW, OR LOUVER OPENING.
- CENTERLINE OF EQUIPMENT OR FURNISHING.
- CENTERLINE OF OTHER FEATURES AS INDICATED.

B. REFER TO SHEET G0.04 FOR ILLUSTRATION OF SYMBOL USED TO INDICATE CENTERLINE DIMENSION.

C. DIMENSIONS ARE TYPICALLY GIVEN TO FACE OF STUD, U.O.N., SEE ITEM "A" ABOVE.

D. REFER TO SHEET G0.04 FOR ILLUSTRATION OF SYMBOL USED TO INDICATE "FACE OF" DIMENSION.

E. WHERE "CLEAR" DIMENSIONS ARE SPECIFICALLY NOTED, DIMENSION IS MEASURED TO:

- FINISH FACES AT THE MOST NARROW OR CONSTRICTED POINTS OF THE SECTION WHERE DIMENSION IS SHOWN WHEN THE DIMENSION OCCURS ACROSS AN OPEN SPACE. IN THIS CASE, A "FACE OF FINISH" DIM IS EQUIVALENT TO A "CLEAR" DIMENSION.
- FIN FACES AT THE WIDEST OR MOST EXPANSIVE POINTS OF THE SECTION WHERE THE DIM IS SHOWN WHEN THE DIMENSION OCCURS ACROSS AN OBJECT OR GROUP OF OBJECTS.

F. WHERE "EQUAL" DIMENSIONS ARE USED ON REFLECTED CEILING PLANS TO LOCATE CEILING GRID WORK POINTS, MEASURE DIMENSIONS TO:

2. SUB-PARAGRAPH E "CONTINUED":

- EDGE OF THE INDICATED CEILING AT THE FACE OF THE ADJ APPLIED FIN MEASURED AT THE PLANE OF THE CEILING. CAUTION: DUE TO POSSIBLE APPLICATION OF APPLIED FINISHES WHOSE THICKNESS MAY VARY BETWEEN FLOOR AND CEILING AND WHOSE THICKNESS IS NOT ACCOUNTED FOR (EXCEPT AS INDICATED BY "FOF" OR "CLEAR") BY DIM SHOWN ON THE FLOOR PLANS, THE CONTRACTOR MUST ADJUST, AS NECESSARY, THE FLOOR PLAN DIMENSIONS TO REFLECT CONDITIONS AT PLANE OF THE CEILING.

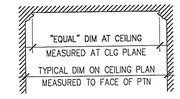

3. WHERE DIMENSIONS ARE NOT PROVIDED ON THE FLOOR PLANS TO LOCATE DOOR OPENINGS, APPLY THE FOLLOWING RULES, IN ORDER, TO DETERMINE THE LOCATION OF DOOR OPENINGS:

A. DOOR OPENINGS MAY BE DIMENSIONED ON DWGS OTHER THAN THE FLOOR PLANS. REFER TO THE SECTIONS, ELEVATIONS, DETAILS, AND DOOR SCHED NOTES FOR ADDITIONAL DIMENSIONAL INFORMATION.

B. WHERE THE HINGE-SIDE OF A DOOR IS SHOWN ADJACENT TO A WALL, OR WALLS, PERPENDICULAR TO THE WALL IN WHICH THE DOOR OPENING OCCURS, LOCATE THE HINGE-SIDE FINISHED EDGE OF THE DOOR OPENING 4 INCHES FROM THE FACE (EXCLUSIVE OF ANY APPLIED FINISH) OF THE CLOSEST PERPENDICULAR WALL OR PARTITION ASSEMBLY.

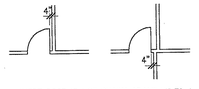

C. WHERE DOOR IS NOT SHOWN ADJACENT TO A PERPENDICULAR WALL AND EITHER DIM E OR DIM F IS 16'-0" OR LESS, LOCATE DOOR NOT LESS THAN THE FOLLOWING MIN DIMENSIONS:

- DIMENSION A = 24" AT EXTERIOR DOORS AND 18"MIN AT INTERIOR DOORS BEYOND THE LATCH SIDE OF THE DOOR AND 60" MIN. PERPENDICULAR TO THE DOORWAY.
- DIMENSION B = DIMENSION B = 12" BEYOND THE LATCH SIDE OF THE DOOR AND 48 MIN PERPENDICULAR TO THE DOORWAY.
- DIMENSION C = DOOR WIDTH + 2 INCHES MIN.
- DIMENSION D = 4 INCHES MIN.
- DIMENSIONS E & F = AS SHOWN ON PLANS.
- DIMENSIONS G = 60" MIN CLEAR.
- DIMENSIONS H = 48" MIN CLEAR.

3. 'CONTINUED'

- IF SPACE ALLOWS, CENTER DOOR IN WALL SHOWN ON THE DRAWINGS SO THAT EITHER DIM A EQUALS DIM C OR DIM B EQUALS DIM D.

D. IF DIM E IS LESS THAN THE SUM OF 2 TIMES THE DOOR WIDTH PLUS 20 INCHES, LOCATE DOOR SO THAT MINIMUMS STATED ABOVE FOR DIM A, DIM B, AND DIM D ARE MET, MAXIMIZING DIM A AND MINIMIZING DIM D TO THE EXTENT POSSIBLE.

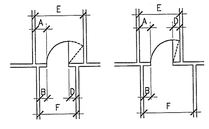

E. WHERE DOOR IS SHOWN LOCATED IN A LARGE EXPANSE OF OPEN WALL (DIM E AND DIM F IN DIAGRAMS BOTH EXCEED 16'-0"), PLACE DOOR AT APPROXIMATE LOCATION SHOWN ON THE PLANS. WHERE DOOR OCCURS IN CMU WALL, PLACE DOOR AT APPROXIMATE LOCATION SHOWN WHILE MINIMIZING PARTIAL CMU MODULES ADJACENT TO THE JAMBS.

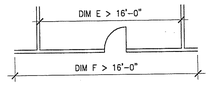

4. WHERE WALLS AND/OR PARTITIONS OF UNEQUAL THICKNESS ABUT, ALIGN EXPOSED FACES, UON.



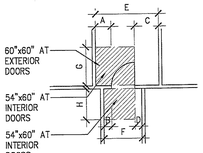

ARCHITECTURAL DIMENSIONING CONVENTIONS — Scale 1

WWC OT
Widom Wein Cohen O'Leary Terasawa

3130 Wilshire Boulevard
Sixth Floor
Santa Monica, California 90403
T (310) 828-0040
F (310) 453-9432
www.wwcot.com

Inland

ARCHITECTURAL REFLECTED CEILING PLAN SYMBOLS

- D418 / CLG HT 9'-6" — ROOM NUMBER (SEE PLANS FOR ROOM NAMES) WITH CEILING HEIGHT *OCCURS ONLY ON CEILING PLANS*
- GRID–TYPE FINISH CEILING, *SEE FINISH SCHEDULE FOR TYPE AND GRID MODULE DIMENSIONS*
- ACCESS PANEL.
- CEILING DIMENSION WORK POINT
- GYPSUM BOARD CEILING, SEE FINISH SCHEDULE FOR ADDTL INFORMATION *UNLESS OTHERWISE NOTED*
- SPRINKLER HEAD
- A — ACCESS PANEL, TYPE AS DESIGNATED BY LETTER. 24" X 24" UON
- CEILING DIFFUSER SUPPLY AIR *SEE MECH.*
- CEILING DIFFUSER RETURN AIR *SEE MECH.*
- CEILING DIFFUSER EXHAUST AIR *SEE MECH.*
- LINEAR DIFFUSER *SEE ALSO MECH DRAWINGS.*
- SIDEWALL DIFFUSER *SEE ALSO MECH DRAWINGS.*
- 2' X 4' FLUORESCENT LIGHT FIXTURE
- 1' X 4' FLUORESCENT LIGHT FIXTURE
- 2' X 2' FLUORESCENT LIGHT FIXTURE
- WINDOW TREATMENT SYSTEM
- J — JUNCTION BOX, CEILING–MOUNTED
- TV — RECESSED TELEVISION OUTLET, CLG–MOUNTED
- BRKT TV — RECESSED TELEVISION OUTLET WITH SUPPORT BRACKET, CLG–MOUNTED
- PROJ TV — RECESSED TELEVISION OUTLET WITH PROJECTION TV SUPPORT BRACKET, CLG–MOUNTED
- VISIBLE AND AUDIBLE FIRE ALARM, CEILING–MOUNTED
- SURFACE–MOUNTED LIGHT FIXTURE
- SURFACE–MOUNTED DARK ROOM SAFE LIGHT
- P 12'-0" — PENDANT LIGHT FIXTURE, *DIM INDICATES HEIGHT AFF*
- RECESSED DOWN–LIGHT FIXTURE
- WALL WASHER LIGHT FIXTURE *SHADING INDICATES LIGHTED FACE*
- SPOT LIGHT FIXTURE, *ARROW INDICATES DIRECTION OF FOCUS*
- EXAMINATION LIGHT
- TRACK LIGHT FIXTURE
- STRIP LIGHT FIXTURE *"P" INDICATES PENDANT MOUNTED. DIM INDICATES HEIGHT AFF*
- 2 P C 9'-0" — CLOCK, PENDANT–MOUNTED. *NUMBER INDICATES NUMBER OF CLOCK FACES*
- SURVEILLANCE CAMERA SEE SECURITY DWGS WHERE APPLICABLE
- ANESTHESIA GAS COLUMN
- EQUIPMENT MANAGEMENT SYSTEM
- MONITOR FOR CATH
- EXIT SIGN, WALL–MOUNTED 7'-6"
- LIGHT FIXTURE, WALL–MOUNTED 8'-0"
- LIGHT FIXTURE, RECESSED IN WALL TK
- SPEAKER, WALL–MOUNTED S 8'-6"
- SIDEWALL SPRINKLER HEAD
- TELEVISION OUTLET, WALL–MOUNTED TV 7'-6"
- BRKT TV 7'-6" — TELEVISION OUTLET WITH SUPPORT BRACKET, WALL–MOUNTED
- PA S — SPEAKER, FLUSH WITH CLG *ABBREVIATION INDICATES TYPE*
- PA P S 9'-0" — SPEAKER, PENDANT–MOUNTED *ABBREVIATION INDICATES TYPE*
- SMOKE DETECTOR *SEE ELEC DWGS FOR TYPE*
- H — HEAT DETECTOR
- MD — MOTION DETECTOR, *SEE SECURITY DRAWINGS*
- OD — OCCUPANCY DETECTOR, *SEE ELECTRICAL DRAWINGS*
- SA — FLASHING PANIC ALARM, *SEE SECURITY DRAWINGS*
- EXIT SIGN, SINGLE–SIDED. *SHADING INDICATES LIGHTED SIDE*
- EXIT SIGN, DOUBLE–SIDED. *SHADING INDICATES LIGHTED SIDES*
- P 8'-6" — EXIT SIGN, PENDANT, SINGLE–SIDED *SHADING INDICATES LIGHTED SIDE*
- P 8'-0" — EXIT SIGN, PENDANT, DOUBLE–SIDED *SHADING INDICATES LIGHTED SIDE*

GENERAL PLAN SYMBOLS & LEGEND:

- NEW CONSTRUCTION
- EXISTING CONSTRUCTION TO REMAIN
- EXISTING CONSTRUCTION TO BE DEMOLISHED
- NOT–IN–CONTRACT ITEMS *(SHOWN DASHED–DOT)*
- TOILET PARTITION AND DOOR
- 7'-0" — ALCOVE, SOFFIT: DIMENSION INDICATES SOFFIT HEIGHT, AFF
- 108 / 112 — INDICATES DIVIDING LINE IN OPEN AREAS THAT ARE DIVIDED INTO SEPARATE ROOM NUMBERS.
- OVER–HEAD ITEMS (I.E. CEILING–MOUNTED EQUIPMENT, WALL–MOUNTED CASEWORK ETC.)
- UNDER–COUNTER OR CONCEALED ITEMS, AS DESIGNATED
- CG CG — CORNER GUARD (CG)
- EG — EDGE GUARD (EG)
- BG — BUMPER GUARD AND/OR RUB RAIL, AS INDICATED
- GUARDRAIL OR HANDRAIL, AS INDICATED

FIRE PROTECTION

- F — FIRE ALARM PULL STATION,
- F — FIRE ALARM HORN/STROBE, ABOVE PULL STATION.
- FEB — FIRE EXTINGUISHER BRACKET, SURFACE–MOUNTED
- FEC FEC — FIRE EXTINGUISHER CABINET, RECESSED OR SURFACE–MOUNTED
- FHC FHC — FIRE HOSE CABINET, RECESSED OR SURFACE–MOUNTED
- FH/FEC FH/FEC — FIRE HOSE / FIRE EXTINGUISHER CABINET, RECESSED OR SURFACE–MOUNTED
- FHV FHV — FIRE HOSE VALVE CABINET, RECESSED OR SURFACE–MOUNTED
- CSP — STANDPIPE (COMBINATION STANDPIPE SHOWN).

DIMENSION SYMBOLS

DIMENSION SHOWN TO:
- CENTERLINE OF ASSEMBLY
- CENTER OF OPENING
- CENTERLINE OF EQUIPMENT/FURNISHINGS

CENTERLINE SYMBOL

DIMENSION SHOWN TO FACE OF:
- PARTITION ASSEMBLY
- EDGE OF DOOR OPENING
- OTHER ASSEMBLY
- WORK POINT INDICATED ON DETAILS

FOR ADDITIONAL INFORMATION REGARDING TYPICAL METHODS OF DIMENSIONING USED ON THE ARCHITECTURAL DRAWINGS, REFER TO "ARCHITECTURAL DIMENSIONING CONVENTIONS" (SHEET G0.4) AND THE "PARTITION SCHEDULE NOTES" (SEE THE "INDEX OF DRAWINGS" FOR SHEET NUMBER).

PLUMBING FIXTURES

- JANITOR'S RECEPTOR
- HB — HOSE BIBB
- EMERGENCY SHOWER/ EYE WASH
- SHOWER *SHOWER CONTROLS AND HEAD ABOVE.*
- FD — FLOOR DRAIN (SHOWN), ROOF, OR AREA DRAIN *LINE OF VALLEY IN SLOPING FLOOR (OR ROOF)*
- DRINKING FOUNTAIN *ACCESSIBLE TO THE DISABLED, TYPICAL.* DF or EWC
- SERVICE SINK
- TOILET, TANK TYPE
- TOILET, WALL–HUNG
- URINAL (UR), WALL–HUNG
- LAVATORY, PEDESTAL OR WALL–HUNG
- LAVATORY, COUNTERTOP *ACCESSIBLE TO THE DISABLED, TYPICAL.*
- SINK, COUNTER–TOP
- SINK, PEDESTAL OR WALL–HUNG.

NOT TO SCALE, REFER TO SHEET A10.1.0 FOR TYPICAL MOUNTING HEIGHTS.

ELECTRICAL AND SYSTEMS

WHEN SHOWN ON THE ARCH DRAWINGS, THE FOLLOWING ARE PROVIDED FOR EXACT LOCATION AND FINISHED APPEARANCE COORDINATION – SEE THE ELECTRICAL OR MECHANICAL DRAWINGS FOR THE DETAILED DESIGN OF EACH SYSTEM.

- LIGHT SWITCH *SEE ELEC DRAWINGS FOR TYPE.*
- ELECTRICAL OUTLET *SEE ELEC DRAWINGS FOR TYPE.*
- ECAB ECAB — ELECTRICAL CABINET, RECESSED OR SURFACE–MOUNTED
- TTB — TELEPHONE TERMINAL BD, SURFACE–MOUNTED
- VOICE/DATA OUTLET, WALL–MOUNTED
- DIGITAL DATA OUTLET, WALL–MOUNTED
- VOICE/DATA OUTLET, FLOOR–MOUNTED
- DIGITAL DATA OUTLET, FLOOR–MOUNTED
- CLOCK
- CLOCK, ELAPSE TIMER
- JUNCTION BOX, WALL–MOUNTED
- MAGNETIC HOLD–OPEN DEVICE, WALL–MOUNTED OR FLOOR–MOUNTED
- LOW LEVEL EXIT SIGN
- CCTV — CCTV CAMERA, WALL–MOUNTED *SEE SECURITY DRAWINGS*
- T 1 — THERMOSTAT *SEE MECHANICAL DRAWINGS FOR TYPE.*

ARCHITECTURAL REFERENCE SYMBOLS

DETAIL PLAN / ELEVATION
8 / A4.2 — AREA OF ENLARGED PLAN OR ENLARGED ELEVATION

DETAIL SECTION
24 / A9.2 — DETAIL NUMBER; DRAWING WHERE DETAIL IS FOUND; AREA OF DETAIL CUT PERPENDICULAR TO VIEW

BUILDING ELEVATION
1 / A3.1 — DIRECTION OF VIEW; ELEVATION NUMBER; DRAWING WHERE ELEVATION IS FOUND

INTERIOR ELEVATIONS
3 / A10.1 / A — ELEVATION NUMBER; SHEET WHERE ELEVATION IS FOUND; DIRECTION OF VIEW(S); ELEVATION LETTER

BUILDING SECTION
23 / A6.6 — SECTION NUMBER; DRAWING WHERE SECTION IS FOUND; LINE OF SECTION CUT; DIRECTION OF VIEW/SHADED ARROWS AT SECTIONS ONLY

WALL SECTION
15 / A7.2 — SECTION NUMBER; DRAWING WHERE SECTION IS FOUND; LINE OF SECTION CUT; DIRECTION OF VIEW/SHADED ARROWS AT SECTIONS ONLY

WINDOW AND LOUVER MARK
W / A201 — WINDOW OR LOUVER IDENTIFYING MARK, SEE CORRESPONDING NUMBER ON SCHEDULE; WINDOW (W) OR STOREFRONT (S)

DOOR MARK
P101 — FILLED PORTION INDICATES PANIC HARDWARE (WHERE OCCURS) SEE DOOR SCHEDULE; DOOR NUMBER (BASED ON ROOM NUMBER DESIGNATION)

EQUIPMENT MARK
AC / 1 — TYPE OF EQUIPMENT; EQUIPMENT NUMBER

REVISION / EXTENT
3 — REVISION NUMBER – SEE REVISION HISTORY ON TITLE BLOCK OF EACH SHEET.; REVISION SYMBOL IS INSIDE INSIDE EXTENT OF CURRENT REVISION AND REFERENCED TO IT.

ROOM IDENTIFICATION
LOBBY / 510 / 10'-0" — ROOM NAME; ROOM NUMBER DESIGNATION; TYP. ROOM CEILING HEIGHT (WHERE OCCURS)

MILLWORK MARK
UD001 — MILLWORK TYPE; MILLWORK NUMBER

KEY NOTE
12 — SEE CORRESPONDING NUMBERED KEYED NOTE DEFINED ON THE SAME SHEET WHERE THE REFERENCE OCCURS

MATCH LINE REFERENCE
DRAWING WHERE CONTINUATION IS FOUND. SEE SHEET A2.P.4 FOR CONTINUATION; DRAWING SIDE

LEVEL LINE
SECOND LEVEL EL 15'-6" — INDICATES HEIGHT ABOVE PROJECT DATUM. SEE "ARCHITECTURAL GENERAL NOTES" (SHEET A0.1) FOR DEFINITION OF DATUM.

DIMENSION POINT
INDICATES POINT ON DIMENSION STRING TO WHICH A POINT ON RELATED DRAWING IS ALSO DIMENSIONED.

ALIGN — ALIGN FINISHED SURFACES

NORTH SYMBOL
TRUE NORTH — TRUE GEOGRAPHICAL NORTH; PLAN NORTH — ARCHITECTURAL PLAN NORTH

GRID OR COLUMN LINES
B — MAJOR GRID LINE; B.4 — INTERMEDIATE GRID LINE; 5 — GRID LINE DEFINING NEW CONSTRUCTION (CIRCLE SHAPE); 90° TYP, UON

GENERAL SYMBOLS NOTES

A. THE PURPOSE OF THIS SHEET IS TO ILLUSTRATE AND DEFINE TYPICAL GRAPHIC SYMBOLS AND SYSTEMS OF GRAPHIC SYMBOLS WHICH MAY OCCUR ON THE ARCHITECTURAL DRAWINGS.

ADDITIONAL SYMBOLS, NOT SHOWN OR DEFINED ON THIS SHEET, MAY BE USED ON THE ARCH DRAWINGS AND ARE TYPICALLY DEFINED ON OTHER SHEETS. WHERE SUCH SYMBOLS OR SYMBOLIC SYSTEMS ARE NOT DEFINED BY THE ARCH DRAWINGS, THE MEANING OF SUCH SYMBOLS SHALL BE AS DEFINED BY "STANDARD REFERENCE SYMBOLS FOR CONSTRUCTION DOCUMENTS" PUBLISHED OCTOBER 1991 BY THE CONSTRUCTION SPECIFICATIONS INSTITUTE.

C. THE ILLUSTRATION OF A SYMBOL OR SYSTEM OF SYMBOLS ON THIS SHEET DOES NOT NECESSARILY INDICATE THAT THE BUILDING ITEM OF SYSTEM DESCRIBED BY THE SYMBOL IS USED AS PART OF THIS PROJECT. REFER TO THE PLANS, ELEVATIONS, SECTIONS, SCHEDULES, DETAILS, AND SPECIFICATIONS TO DETERMINE THE SCOPE OF THE WORK.

D. MOUNTING HEIGHTS, WHERE INDICATED ADJ TO THE SYMBOLS SHOWN ON THIS SHEET, ARE PROVIDED ONLY FOR THE PURPOSE OF ILLUSTRATING THE FORMAT OF THE SYMBOL ON DRAWINGS OTHER THAN THIS SHEET. MOUNTING HEIGHTS ARE INDICATED ADJ TO THE SYMBOL ONLY WHERE THE MOUNTING HEIGHT IS NOT TYPICAL. WHERE THE HEIGHT IS TYPICAL, NO HEIGHT IS SHOWN. TO DETERMINE THE TYPICAL MOUNTING HEIGHT FOR EACH ELEMENT, REFER TO SHEET A10.1.0 – "TYPICAL MOUNTING HEIGHT AND CONFIGURATION DIAGRAMS" – AND OTHER DRAWINGS AS INDICATED.

- C — MOUNTING HEIGHT IS OMITTED WHERE HEIGHT IS TYPICAL.
- C 7'-0" — HEIGHT IS SHOWN WHERE HEIGHT IS NOT TYPICAL.

E. SYMBOLS ARE NOT DRAWN TO SCALE. TO DETERMINE THE ACTUAL SIZES OF ELEMENTS REPRESENTED BY SYMBOLS, REFER TO THE SPECIFICATIONS AND OTHER DRAWINGS AS MAY APPLY.

F. FOR ADDITIONAL INFORMATION REGARDING DIMENSIONING STANDARDS USED ON THIS PROJECT, REFER TO ON SHEET G0.05

G. FOR INFORMATION REGARDING SYMBOLS WHICH ARE USED AS ABBREVIATIONS, REFER TO THE "ARCHITECTURAL ABBREVIATIONS" SHOWN ON SHEET G0.5

H. CERTAIN SYMBOLS MAY INCORPORATE SPECIAL ABBREVIATIONS AS PART OF THE SYMBOL. SUCH SPECIAL ABBREVIATIONS ARE AS DEFINED ON THIS SHEET.

PARTITION TYPE SYMBOL

BASIC PARTITION TYPE AND ADDITIONAL PARTITION COMPONENTS, IF ANY, ARE INDICATED ON THE FLOOR PLANS BY THE FOLLOWING SYMBOL INCORPORATING A FOUR DIGIT NOTATION. SYMBOLS APPEAR ON THE LARGEST SCALE PLAN PROVIDED FOR ANY GIVEN AREA.

- FIRST THREE DIGITS INDICATE BASIC PARTITION TYPE – SEE "PARTITION SCHEDULE" AND THE DETAILS ILLUSTRATING BASIC PARTITION TYPES ON THE SHEETS FOLLOWING THE SCHEDULE (SEE THE "INDEX OF DRAWINGS" FOR SHEET NUMBERS).
- FINAL DIGIT INDICATES ADDITIONAL COMPONENTS GROUP – SEE "ADDL PARTITION COMPONENTS MATRIX" (SEE THE "INDEX OF DRAWINGS" FOR SHEET NUMBER).

OR — 2C4A

2 C 4 A — FRAMING UNIT SIZE CATEGORY
1 = 1–5/8" FRAMING UNIT
2 = 2–1/2" FRAMING UNIT
3 = 3–5/8" FRAMING UNIT
4 = 4" FRAMING UNIT
6 = 6" FRAMING UNIT

- BASIC PARTITION ASSEMBLY CATEGORY
- FIRE–RATING OF PARTITION IN HOURS. RATING MAY EXCEED REQUIREMENTS OF APPLICABLE BUILDING CODE(S).

- PARTITION TYPE "2C4–" CONTINUES ABOVE HEAD OF DOOR, UNLESS OTHERWISE NOTED (SEE ALSO PARTITION SCHEDULE NOTE "K" ABOVE)
- PARTITION TYPE NOT INTERRUPTED AND TYPE "2C4–" CONTINUES DOWN LEG OF "T".
- LINE INDICATES BREAK BETWEEN TYPES "2C4D" AND "1B4–"
- TYPE "1B6–" CONTINUES AROUND CORNER
- TYPE "2C4D" CONTINUES THROUGH WITHOUT INTERRUPTION
- LINE INDICATES BREAK BETWEEN TYPES "2C4–" AND "0A4C"
- LINE INDICATES BREAK BETWEEN TYPES "2C4–" AND "1B6–"

ARCHITECTURAL SITE DEVELOPMENT SYMBOLS

- 370 — EXISTING CONTOUR *ELEVATION SHOWN ON HIGH SIDE.*
- 370 — NEW FINISH CONTOUR *ELEVATION SHOWN ON HIGH SIDE.*

GRADE DESIGNATIONS
- 72.00 / 68.25 — NEW FINISH GRADE; EXISTING GRADE
- TW 168.25 — TOP OF WALL (FOR OTHER DESIGNATIONS, SEE ABBREVIATIONS)
- TC 72.00 / 68.25 — TOP OF CURB; BOTTOM OF CURB OR FINISHED SURFACE
- WORK/CONTROL/DATUM POINT

- PROPERTY LINE.
- EASEMENT OR SETBACK LINE.
- LIMIT OF WORK CONSTRUCTION BOUNDARY.
- CHAIN LINK FENCE
- WROUGHT IRON FENCE
- FLOW LINE TOWARD DRAIN.
- FOOTPRINT OF BUILDING TO BE DEMOLISHED
- FOOTPRINT OF EXISTING BUILDING.
- FOOTPRINT OF NEW BUILDING

- LIGHT STANDARD.
- CB — CATCH BASIN *SEE ALSO CIVIL DRAWINGS.*
- AD — AREA DRAIN.
- FHY — FIRE HYDRANT (FHY).
- FIRE DEPT. CONNECTION (FDC), FREE–STANDING.
- PARKING STALL RESERVED FOR THE DISABLED.
- MH — MANHOLE.
- TYPE — POWER AND/OR TELEPHONE POLE, NEW.
- CENTER LINE
- FO — FACE OF
- FOF — FACE OF FINISH

DOOR OPENING AND INTERIOR GLAZED PARTITION SYMBOLS

DOORS
- P101 — SINGLE DOOR *DOOR OPENING MARK (TYPICAL) – SEE SCHEDULE*
- P101 — RADIO FREQUENCY BOOTH DOOR
- P101 — VAULT, WALK–IN REFRIG, OR AUDIO BOOTH DOOR, AS DESIGNATED
- P101 — DOUBLE ACTING DOOR *AT PAIRS LESS THAN 6'–0" WIDE, LARGER LEAF IS 3'–0" WIDE (UON)*
- P101 — PAIR DOORS: UNEQUAL SIZES *DOOR MARK ALWAYS SHOWN ON LARGER AND ACTIVE LEAF (UON) – SEE SCHED*
- P101 — PAIR DOORS: EQUAL SIZES *DOOR MARK ALWAYS SHOWN ON ACTIVE LEAF*
- P101 — PAIR DOORS: EQUAL SIZES, DOUBLE EGRESS
- P101 — AUTOMATIC DOORS: PUSH PAD ACTUATED
- CASED OPENING
- P101 — SLIDING DOOR
- P101 — SLIDING POCKET DOOR
- P101 — SLIDING DOOR *(SHOWN WITH ONE FIXED PANEL)*
- P101 — ACCORDION DOOR
- P101 — BIFOLD DOOR
- P101 — PAIR: BIFOLD DOORS
- P101 — FOLDING DOOR
- P101 — SLIDING DOOR/BREAK–AWAY
- P101 — ROLL–UP DOOR, FACE–OF–WALL MOUNTED
- P101 — ROLL–UP DOOR, BET JAMBS MOUNTED
- P101 — INTERIOR GLAZED PARTITION *OPENING NUMBER (TYP) SEE SCHEDULE*

WINDOWS
- 143B — PASS–THROUGH OPENING
- 143B — GLAZED PASS–THROUGH WINDOW
- 143B — PASS–THRU WINDOW WITH ROLL–UP DOOR
- 143B — GLAZED PASS–THRU WINDOW WITH ROLL–UP DOOR

ARCHITECTURAL MATERIALS INDICATIONS

LARGE SCALES / INTERMEDIATE SCALES / SMALL SCALES

- EARTH *SHOWN IN SECTION*
- ROCK FILL, GRAVEL *SHOWN IN SECTION*
- CAST–IN–PLACE CONC *PLAN OR SECTION*
- PRECAST CONCRETE *PLAN OR SECTION*
- BRICK MASONRY *PLAN OR SECTION*
- CONC MASONRY UNITS *PLAN OR SECTION*
- STONE: GRANITE, MARBLE, OR AS NOTED
- METAL: TYPE AS NOTED *PLAN OR SECTION*
- METAL: ROLLED SHAPES *PLAN OR SECTION*
- SHEET METAL: AS NOTED *PLAN OR SECTION*
- WOOD FRAMING, CONT *SHOWN IN SECTION*
- WOOD BLOCKING *SHOWN IN SECTION*
- FINISHED WOOD *SECTION OR ELEVATION*
- PLYWOOD *SHOWN IN SECTION*
- PARTICLEBOARD *SHOWN IN SECTION*
- SPRAYED FIREPROOFING *SHOWN IN SECTION*
- BATT INSULATION: THERMAL OR ACOUS, UON
- RIGID INSULATION: THERM, ACOUS, OR SAFING
- GLASS *PLAN OR SECTION*
- PLASTER ON METAL LATH *SHOWN IN SECTION*
- GYPSUM BOARD *SHOWN IN SECTION*
- TILE: MOSAIC, CERAMIC, QUARRY, UON
- RESINOUS FLOORING: TERRAZZO, TROWEL–ON, UON
- ACOUSTICAL TILE *SHOWN IN SECTION*
- RESILIENT FLOORING: VCT, SHEET VINYL, UON
- CARPET, CARPET TILE *SHOWN IN SECTION*

ARCHITECTURAL DETAIL NUMBERING SYSTEM

DETAIL MODULE LAYOUT

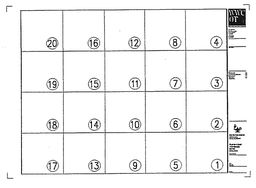

DETAIL NUMBERING EXAMPLE

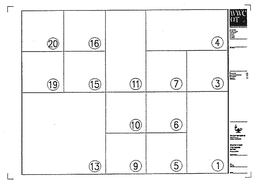

DETAILS ARE NUMBERED ACCORDING TO THEIR LOCATION ON EACH SHEET, AND ARE NOT NUMBERED CONSECUTIVELY.

DETAIL PLANS, ELEVATIONS, SECTIONS, AND DETAILS ARE NUMBERED ACCORDING TO THE MODULE SYSTEM SHOWN IN THE ILLUSTRATION AT LEFT.

EACH DETAIL MAY OCCUPY ONE OR MORE WHOLE MODULES – OR REGULAR FRACTIONS OF A WHOLE MODULE (IE, 1–1/3 MODULES WIDE BY 2–1/2 MODULES HIGH). THE DETAIL MODULE IS USED TO ESTABLISH THE IDENTIFYING LABEL FOR EACH DETAIL, NOT TO LIMIT THE SIZE OF THE DETAIL.

THE NUMBER OF THE MODULE (IE, 11 OR 13) WHICH OCCURS IN THE LOWER LEFT CORNER OF THE MODULE -- OR SEVERAL MODULES GROUPED TOGETHER TO COMPRISE A SINGLE DETAIL -- DETERMINES THE NUMBER OF THE DETAIL PLAN, ELEVATIONS, SECTION, OR DETAIL (AS SHOWN IN THE ILLUSTRATION AT LEFT). ALTHOUGH THE MODULES NUMBERS OCCUR IN CONSECUTIVE ORDER, NOT ALL NUMBERS ARE NECESSARILY USED ON EACH SHEET.

File Path & Name: F:\PROJECTS\04206-00\A-CD\SHEETS_G0.04.DWG
© WWCOT 2006 May 28, 2007 - 03:31 pm

WWC OT
Widom Wein Cohen O'Leary Terasawa
3130 Wilshire Boulevard
Sixth Floor
Santa Monica, California 90403
T (310) 828-0040
F (310) 453-9432
www.wwcot.com
Inland Empire
Palm Springs
Moorpark
Shanghai, China

RECEIVED
10:08 am, Aug 14, 2008
FRAMEMAX

Building Department Submittal: June 1, 2007
Issued For Bid: ———
Issued For Construction: ———

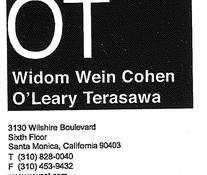

KEY PLAN

Project:
Jewish Home for The Aging
FOUNTAINVIEW AT EISENBERG VILLAGE
6440 Wilbur Ave
Reseda, CA. 91335
JEWISH HOME FOR THE AGING
18855 Victory Blvd.
Reseda, CA 91335
Project Number: 04206.00

ARCHITECTURAL GENERAL NOTES AND SYMBOLS

Date: 04/05/2007
Drawn By: ———
Checked By: ———

G0.04
Sheet No.

RECEIVED BY SUFFOLK ON 06/01/07

NOT USED

Scale X" = 1'-0" (20)

NOT USED

Scale X" = 1'-0" (16)

Roll-In Shower

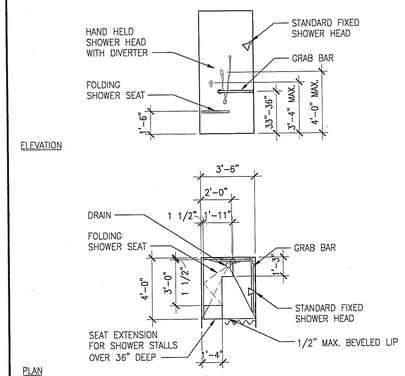

Scale 1/4"=1'-0" (12)

Semi Ambulatory Toilet Stall

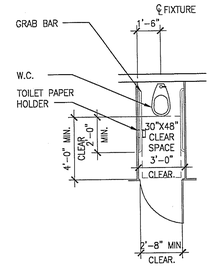

Scale 1/4" = 1'-0" (8)

Urinal Clearances (Adult)

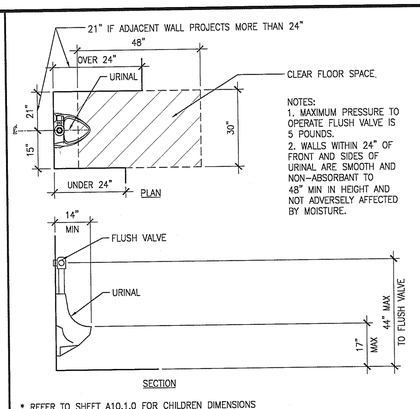

* REFER TO SHEET A10.1.0 FOR CHILDREN DIMENSIONS

Scale 1/2" = 1'-0" (4)

Recessed Drinking Fountain

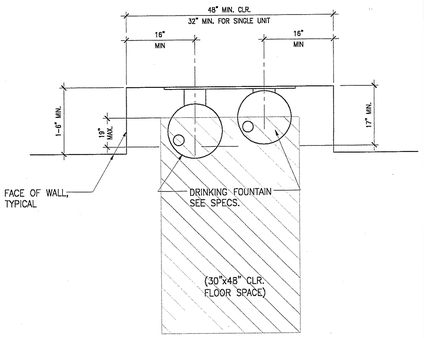

G1-24_DrinFount.dwg.dwg

Scale 3/4" = 1'-0" (17)

Elevator Cab

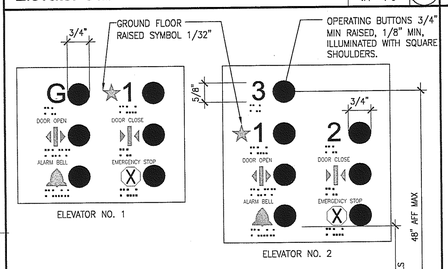

NOTES:
1. INSTALL 2" HIGH RAISED 1/32" ARABIC NUMERALS AND RAISED BRAILLE SYMBOLS 60" HIGH FROM FLOOR ON BOTH JAMB PANELS.
2. LOCATED GRADE 2 BRAILLE SYMBOLS BELOW RAISED CHARACTERS.
3. COMPLY WITH ALL OTHER ACCESSIBILITY REQUIREMENTS.

Scale 1/4" = 1'-0" (15)

Grab Bar

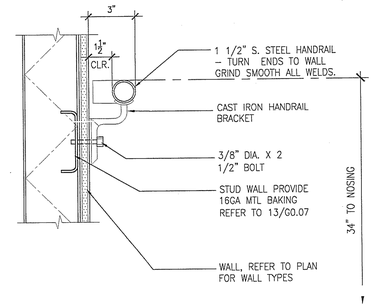

G1-22_HANDRAIL.DWG

Scale 3" = 1'-0" (11)

Single Occupancy Toilet

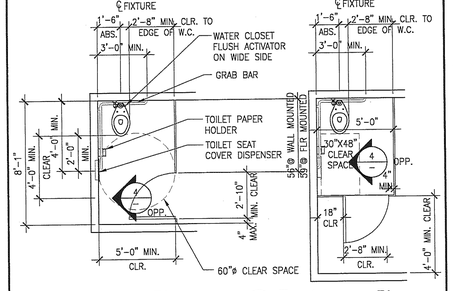

NOTE: REFER TO PLAN B FOR ADDITIONAL NOTES AND DIMENSIONS

Scale 1/4" = 1'-0" (7)

Toilet Clearance (Adult)

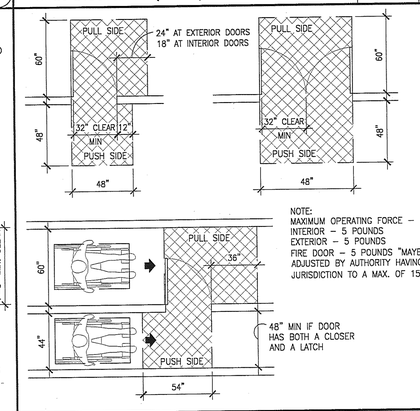

Scale 1/2" = 1'-0" (3)

Accessible Elevator Controls

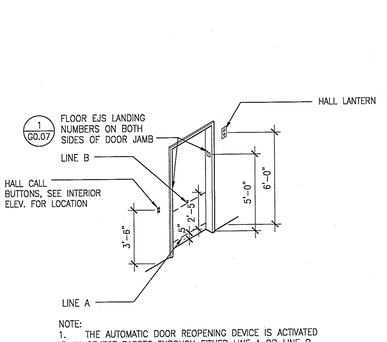

NOTE:
1. THE AUTOMATIC DOOR REOPENING DEVICE IS ACTIVATED IF AN OBJECT PASSES THROUGH EITHER LINE A OR LINE B, LINE A AND LINE B REPRESENT THE VERTICAL LOCATION OF THE DOOR REOPENING DEVICE NOT REQUIRING CONTACT

Scale 6" = 1'-0" (14)

Handrail to Stud Wall Detail

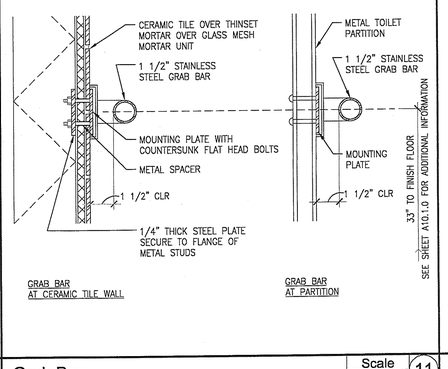

Scale 3"=1'-0" (10)

Multiple Toilet Stall

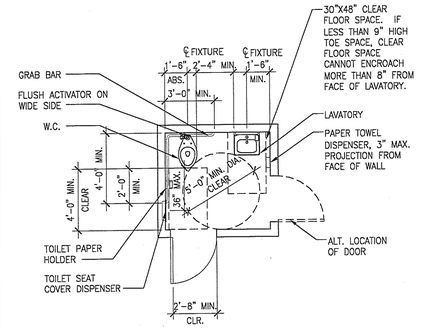

NOTES:
1. PROJECTION OF TOILET ACCESSORIES TO BE 3" MAXIMUM.

Scale 1/4"=1'-0" (6)

Door Clearances

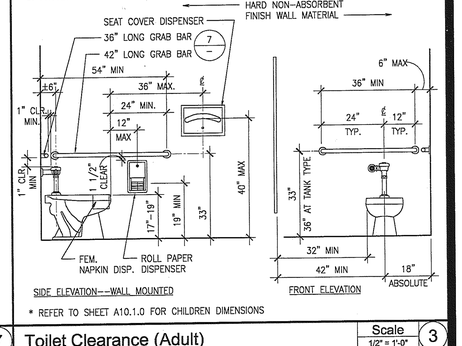

* REFER TO SHEET A10.1.0 FOR CHILDREN DIMENSIONS

Scale 1/4" = 1'-0" (2)

Grab Bar

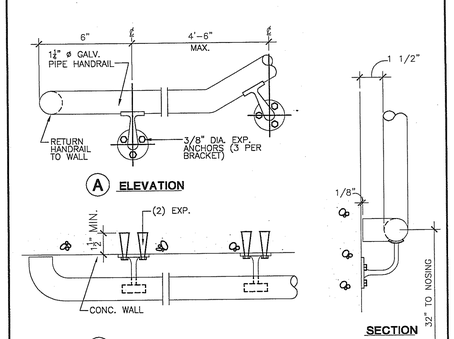

G1-21-HANDRAIL.DWG

Scale 3"-1'-0" (9)

Lavatory Clearances

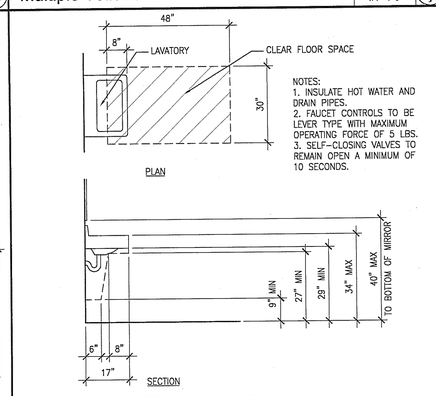

* REFER TO SHEET A10.1.0 FOR ADDITIONAL INFORMATION

Scale 1/2" = 1'-0" (5)

Accessible Route Clearances

NOTE:
PROTRUDING OBJECTS MAY NOT REDUCE THE REQUIRED CLEAR WIDTH OF AN ACCESSIBLE ROUTE OR MANUVERING SPACE

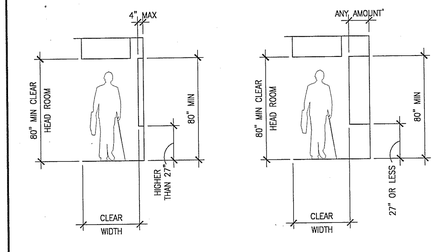

Scale 1/4" = 1'-0" (1)

WWC OT
Widom Wein Cohen O'Leary Terasawa
3130 Wilshire Boulevard
Sixth Floor
Santa Monica, California 90403
T (310) 828-0040
F (310) 453-9432
www.wwcot.com
Inland Empire
Palm Springs
Moorpark
Shanghai, China

RECEIVED
10:08 am, Aug 14, 2008
FRAMEMAX

Building Department Submittal: June 1, 2007
Issued For Bid: ____
Issued For Construction: ____

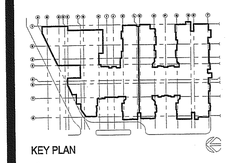

KEY PLAN

Project:
Jewish Home for The Aging
FOUNTAINVIEW AT EISENBERG VILLAGE
6440 Wilbur Ave
Reseda, CA. 91335

JEWISH HOME FOR THE AGING
18855 Victory Blvd.
Reseda, CA 91335
Project Number: 04206.00

TYPICAL ACCESSIBILITY DETAILS

Date: 04/05/2007
Drawn By: ____
Checked By: ____

G0.05
Sheet No.

File Path & Name: F:\PROJECTS\04206-00\A-CD\SHEETS_G0.05.DWG
© WWCOT 2006 May 28, 2007 - 03:31 pm

RECEIVED BY SUFFOLK ON 06/01/07

Not Used

Scale 20

Toilet Wall Sign

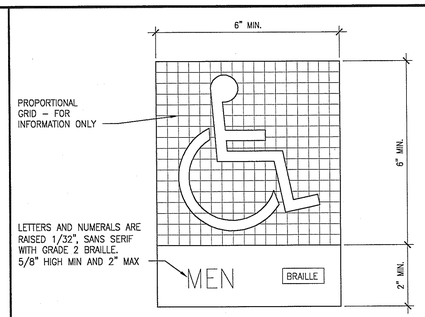

NOTES:
1. WALL MOUNT CENTERED 60" ABOVE FINISH FLOOR, ON LATCH SIDE OF DOOR.

2. CHARACTERS AND BACKGROUND TO HAVE NON-GLARE FINISH AND CONTRASTING COLOR TO WALL.

–.DWG

Scale 6" = 1'-0" 16

ROOM COUNT SIGNAGE

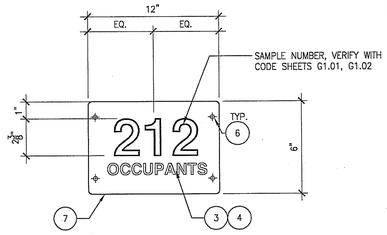

Scale 3"=1'-0" 12

CHARACTER PROPORTIONS

ALL LETTERS MEASURED MUST BE UPPERCASE. AFTER CHOOSING A TYPESTYLE TO TEST, BEGIN BY PRINTING THE LETTER "I", "X", AND "O" AT 1 INCH HIGH. PLACE THE TEMPLATE'S 1:1 SQUARE OVER THE "X" OR "O", WHICHEVER IS NARROWER. IF THE CHARACTER IS NOT WIDER THAN 1 INCH, NOR NARROWER THAN 3:5 RECTANGLE, THE PROPORTIONS ARE CORRECT. USE THE 1:5 RECTANGLE TO DETERMINE IF THE STROKE OF THE "I" IS TO BROAD, AND THE 1:10 RECTANGLE TO SEE IF IS TOO NARROW. IF ALL THE TESTS ARE PASSED, THE TYPE STYLE IS COMPLIANT WITH PROPORTION CODE.

TEMPLATE FOR CHECKING CHARACTER AND STROKE WIDTH TO HIGH PROPORTIONS:

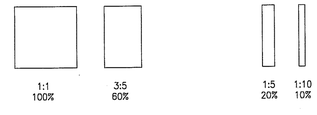

a-rp-ada-det-39.dwg

Scale HALF 8

SIGNAGE TEMPLATES

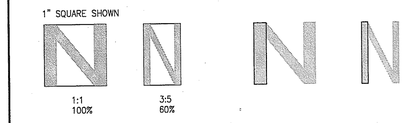

BRAILLE: CALIFORNIA GRADE 2 BRAILLE SHALL BE USED WHEREVER BRAILLE IS REQUIRED IN OTHER PORTIONS OF THESE STANDARDS. DOTS SHALL BE 1/10 INCH (2.54mm) SPACE BETWEEN CELLS, MEASURED IN THE SECOND COLUMN OF DOTS IN THE FIRST CELL TO THE FIRST COLUMN OF DOTS IN SECOND CELL. DOTS SHALL BE RAISED MINIMUM OF 1/40 INCH (0635 mm) ABOVE BACKGROUND. 1117B.5.6.

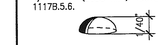

ROUNDED OR DOMED CALIFORNIA BRAILLE DOTS. EACH DISTINCT AND SEPARATE. DOTS WITH STRAIGHT SIDES AND FLAT TOPS ARE NOT ACCEPTABLE.

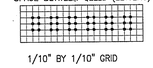

BRAILLE SPACING TEMPLATE PER TITLE 24

mdl-040

Scale FULL 4

Not Used

Scale 19

Traffic Markings

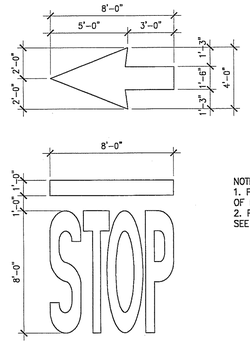

NOTES:
1. PAINT SIGNS IN CENTER OF LANE – SEE SITE PLAN
2. PAINT WITH WHITE HIGHWAY PAINT SEE SPECIFICATIONS – TWO COATS MIN.

c-dt-118.dwg

Scale 1/4" = 1'-0" 15

ASSIST LISTENING SYSTEM SIGN

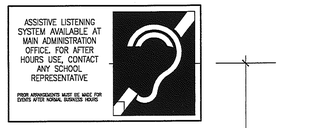

NOTES: SYMBOL TO BE PROPORTIONED AS REQUIRED BY TITLE 24 SEC. 1104B.2

ALL LETTERING TO BE PERMANENT FABRICATION OF SIGN

G8–06.dwg

Scale N.T.S. 11

CHARACTER PROPORTIONS

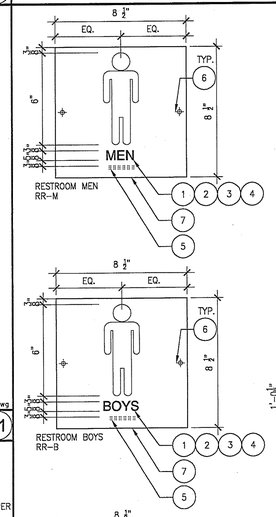

SIGNAGE TEMPLATES

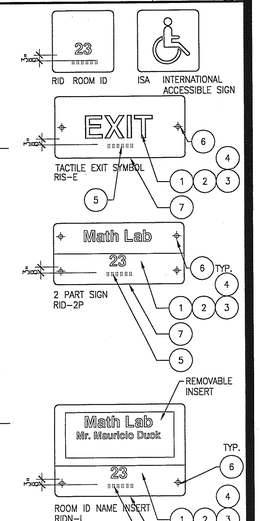

Not Used

Scale 18

ELEVATOR DIRECTIONAL SIGNAGE

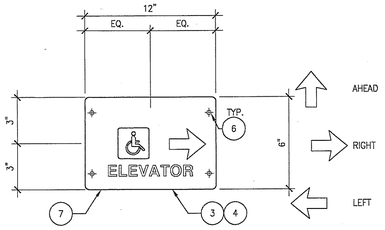

EDS ELEVATOR DIRECTIONAL SIGNAGE

Scale 3"=1'-0" 14

ASSIST LISTENING SYSTEM SIGN

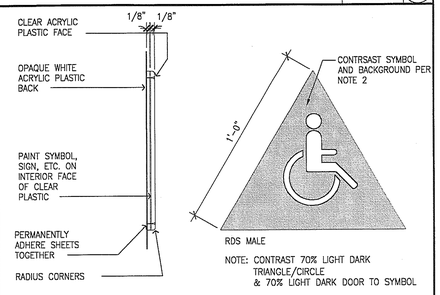

– .DWG

Scale 3"=1'-0" 13

RESTROOM SIGNAGE

Scale N/A 9

Permanent Room Sign

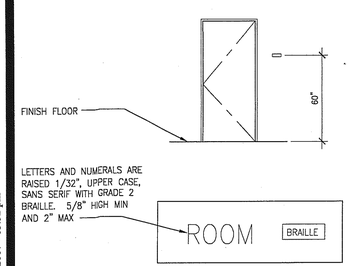

NOTES:
1. WALL MOUNT CENTERED 60" ABOVE FINISH FLOOR, ON LATCH SIDE OF DOOR.
2. CHARACTERS AND BACKGROUND TO HAVE NON–GLARE FINISH AND CONTRASTING COLOR TO WALL.
3. SEE GRAPHIC DESIGN DRAWINGS FOR SIZE, MATERIALS AND LAYOUT.

–.DWG

Scale 6" = 1'-0" 17

EXIT ONLY SIGN

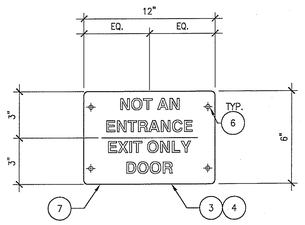

Scale 3"=1'-0" 13

TYPICAL SIGNAGE REQUIREMENTS

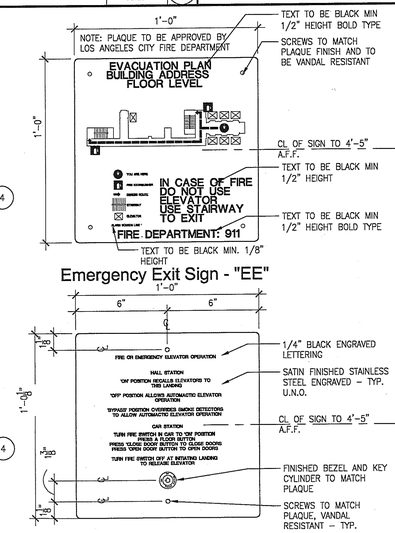

1.– CHARACTER TYPE: CHARACTERS ON SIGNS SHALL BE RAISED 1/32" (0.794 mm) MINIMUM AND SHALL BE SANS SERIF UPPERCASE CHARACTERS ACCOMPANIED BY GRADE 2 BRAILLE. (SEE NOTE 5 BELOW)

2.– CHARACTER SIZE: RAISED CHARACTERS, SHALL BE MINIMUM OF 5/8" INCH (15.9 mm) AND MAXIMUM OF 2" (51mm) HEIGHT.

3.– FINISH AND CONTRAST: CONTRAST BETWEEN CHARACTERS, SYMBOLS AND THEIR BACKGROUND MUST BE 70% MINIMUM AND HAVE A NON–GLARE FINISH. 1117B.52

4.– PROPORTIONS: CHARACTERS ON SIGNS SHALL HAVE A WIDTH–TO–HEIGHT RATIO OF BETWEEN 3:5 AND 1:1 AND A STROKE WIDTH–TO–HEIGHT RATIO OF BETWEEN 1:5 AND 1:10 1117B.5.3

5.– BRAILLE: CALIFORNIA GRADE 2 BRAILLE SHALL BE USED WHEREVER BRAILLE IS REQUIRED IN OTHER PORTIONS OF THESE STANDARDS. DOTS SHALL BE 1/10 INCH (2.54mm) SPACE BETWEEN CELLS, MEASURED IN THE SECOND COLUMN OF DOTS IN THE FIRST CELL TO THE FIRST COLUMN OF DOTS IN SECOND CELL. DOTS SHALL BE RAISED MINIMUM OF 1/40 INCH (0635 mm) ABOVE BACKGROUND. 1117B.5.6.

NOTE:
SEE SHEET A10.1.1 FOR TYPICAL MOUNTING HEIGHTS

6.– ATTACH SIGN USING (2) TWO FLATHEAD COUNTERSUNK SCREWS TO SOLID BACKING & ADHESIVE TO BACK

7.– PLATE OF 1/8" THICK PHOTO SENSITIZED ACRYLIC ETCHED TO FORM A SINGLE PLAQUE. SIGNS WILL BE (2) COLOR SIGN WITH LIGHT BACKGROUND & DARK CHARACTERS. COLORS TO BE DETERMINED BY INTERIORS & GRAPHICS CONSULTANT.

8.– ALL ROOM LOCATION OF SINGE SHALL BE REVIEWED AND

NOTES:
1. POST SIGN IN A PROMINENT PLACE INDICATING THE AVAILABILITY OF TEXT TELEPHONE DEVICES

–.DWG

Scale N/A 1

WWC OT
Widom Wein Cohen O'Leary Terasawa

3130 Wilshire Boulevard
Sixth Floor
Santa Monica, California 90403
T (310) 828-0040
F (310) 453-9432
www.wwcot.com

Inland Empire
Palm Springs
Moorpark
Shanghai, China

RECEIVED
10:08 am, Aug 14, 2008
FRAMEMAX

Building Department Submittal: June 1, 2007
Issued For Bid: _____
Issued For Construction: _____

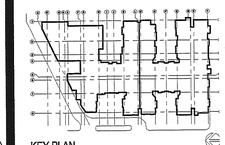

KEY PLAN

Project:
Jewish Home for The Aging
FOUNTAINVIEW AT EISENBERG VILLAGE
6440 Wilbur Ave
Reseda, CA. 91335

JEWISH HOME FOR THE AGING
18855 Victory Blvd.
Reseda, CA 91335

Project Number: 04206.00

Accessibility and Site Signage Details

Date: 04/05/2007
Drawn By: _____
Checked By: _____

G0.06
Sheet No.

File Path & Name: R:\PROJECTS\04206.00 JEWISH HOME FOR THE AGING\CONSTRUCTION DOCUMENTS\G0.06.DWG
© WWCOT 2006. May 08, 2007 - 03:32 pm

RECEIVED BY SUFFOLK ON 06/01/07

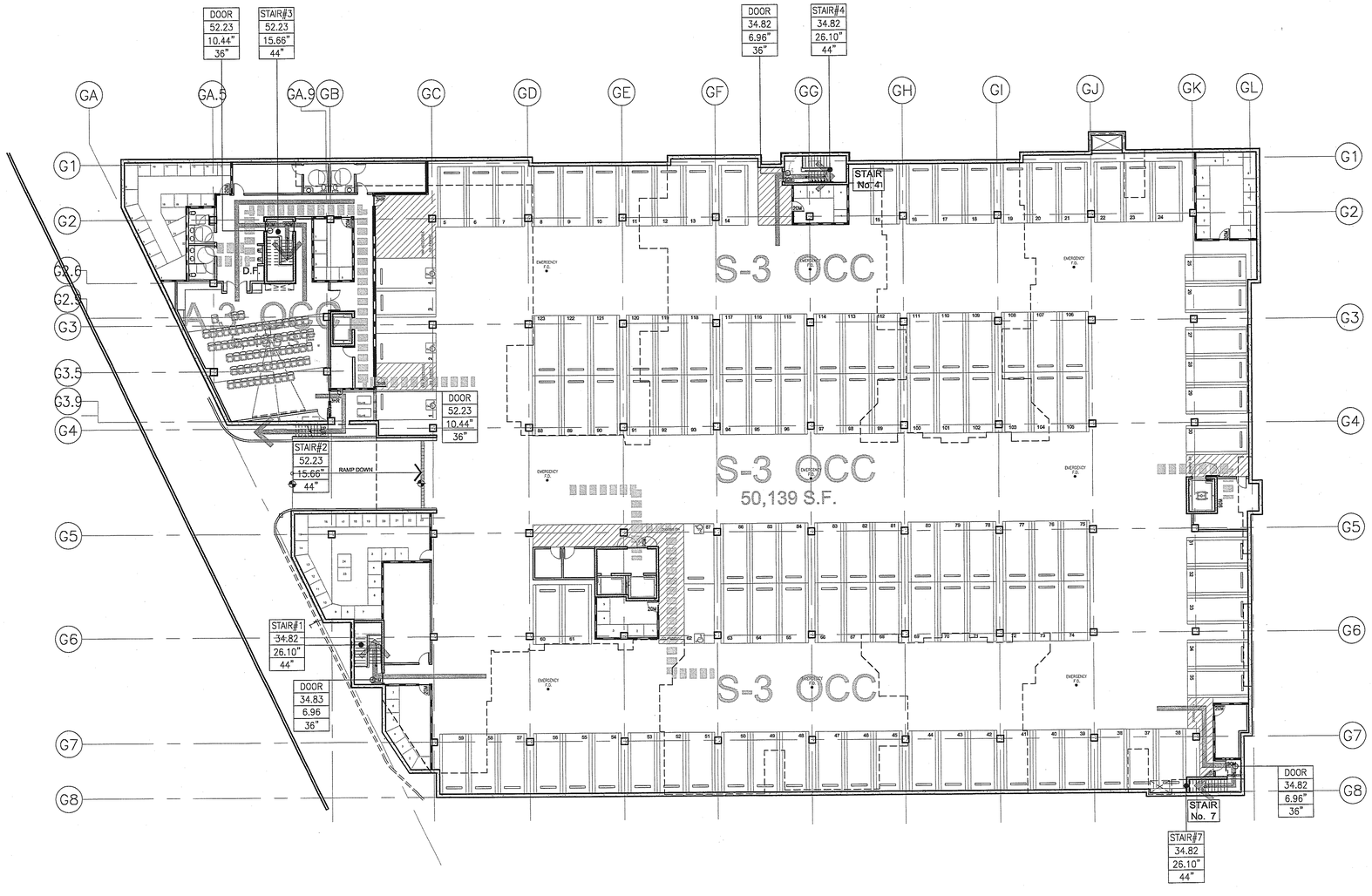

OCCUPANT LOAD CALCULATION:

OCCUPANCY CALCULATED:

ROOM NAME:	*AREA (S.F.)	O.L. FACTOR	OCCUPANTS	EXITS REQ/PROV
S-3 OCCUPANCY				
[1]PARKING (034)	46,340	200	231.70	2/3
[2]STORAGE (025)	300	1.55	1/1	1/1
[3]ELEV.EQUIPMENT (022)	82	200	.41	1/1
[4]STORAGE (027)	143	300	.47	1/1
[5]STORAGE (023)	199	300	.66	1/1
[6] ELEV. LOBBY (029)	137	7	19.57	1/1
[7]TELE – DATA (031)	70	300	.23	1/1
[8]STORAGE (034)	293	300	.97	1/1
[9]MAIN ELEC. ROOM (032)	420	300	1.4	1/1
[10]STORAGE (023)	938	300	3.12	1/1
[11]STORAGE (024)	183	300	3.12	1/1
[12]ELEV. EQUIPMENT (028)	77	200	.38	1/1
TOTAL FOR S-3	49,347		261.07	2/3
A-3 OCCUPANCY				
AREA OF RESCUE	64	300	.21	1/1
[1] ELEV. LOBBY–SOUTH (010)	161	7	23	1/1
[2]ELEV. ROOM (011)	60	200	.30	1/1
[3]STORAGE (014)	215	300	.71	1/1
[1] THEATER LOBBY–NORTH (015)	273	7	39	1/1
[1] THEATER (012)	1,620	FIXED SEAT	70	2/2
[4]STORAGE (018)	744	300	2.48	1/1
[5]WOMEN'S LOCKERS (019)	194	50	3.88	1/1
[5]MEN'S LOCKERS (022)	194	50	3.88	1/1
TOTAL FOR A-3	3,525		104.46	2/2
FLOOR TOTALS	52,872		365.53	4/5

*NOTE: WALL THICKNESS AND RESTROOMS AREAS WERE NOT TAKEN INTO OCCUPANCY LOAD CALCULATION.

** EXIT TABULATIONS:

S-3 OCCUPANCY:	
TOTAL STAIR WIDTH REQUIRED (261.07 TOTAL OCC. LOAD x .3)	78.32 IN
TOTAL STAIR WIDTH PROVIDED (IN 3 STAIRS)	132.00 IN
TOTAL EXIT WIDTH REQUIRED (261.07 TOTAL OCC. x .2)	52.21 IN
TOTAL EXIT WIDTH PROVIDED (IN 3 DOORS)	156.63 IN
A-3 OCCUPANCY:	
TOTAL STAIR WIDTH REQUIRED (104.46 TOTAL OCC. LOAD x .3)	31.33 IN
TOTAL STAIR WIDTH PROVIDED (IN 2 STAIRS)	88.00 IN
TOTAL EXIT WIDTH REQUIRED (104.46 TOTAL OCC. x .2)	20.89 IN
TOTAL EXIT WIDTH PROVIDED (IN 2 DOORS)	72.00 IN

ALLOWABLE FLOOR AREA FOR MIXED OCCUPANCIES: (SEC 504.3)

** CBC SECT. 1003.2.3.2; 1003.3.1.1 AND TABLE 10–B

**** PROVIDED PLUMBING FIXTURE TABULATION

FIXTURE	STAFF MALE	STAFF FEMALE	STAFF UN-ASSIGN	***** TENANT MALE	***** TENANT FEMALE	***** TENANT UN-ASSIGN	TOTALS FOR THIS LEVEL
WATER CLOSET	1	1	–	1	1	–	4
URINAL	–	–	–	–	–	–	–
LAVATORIES	1	1	–	1	1	–	4
SHOWERS	–	–	–	–	–	–	–

**** SEE OVERALL PLUMBING FIXTURE CALCULATION FOR MINIMUM REQUIREMENTS

***** FOR PERMANENT RESIDENT USE

BASEMENT LEVEL EXITING AND OCCUPANCY CALCULATIONS

Scale 2

DIRECTION OF EXIT PATH OF TRAVEL

ADA SITE ACCESS PATH

ONE HOUR RATED OCCUPANCY SEPARATION

TWO HOUR RATED OCCUPANCY SEPARATION

THREE HOUR RATED OCCUPANCY SEPARATION

RATED ACCESS WALL OPENING, SEE DOOR SCHEDULE

TYPE OF EXIT (DOOR, STAIR)

DOOR / OCC. 32" / 36" — NUMBER OF OCCUPANTS SERVING DOOR; DOOR WIDTH REQUIRED (TOTAL WIDTH DIVIDED BY NUMBER OF DOORS SERVING ZONE CALCULATED. SEC 1003.2.1; DOOR WIDTH PROVIDED

BUILDING HEIGHTS:

[1]ALLOWABLE BUILDING HEIGHT:	
BUILDING	ALLOWABLE / ACTUAL
TOTAL BUILDING HEIGHT	12 STORIES / 55'–0" AFF
UNDERGROUND GARAGE	1 STORY

1. CBC TABLE 5–B

ALLOWABLE AREA INCREASE TABULATIONS FOR TYPE II F.R. CONSTRUCTION

***ALLOWABLE FLOOR AREAS CALCULATIONS	
ALLOWABLE FLOOR AREA ONE STORY:	(TABLE 5–B) : 29,900 S.F.
ALLOWABLE AREA INCREASES 504.2	29,900 S.F. x 2 =59,800 S.F.
ALLOWABLE AREA INCREASES 505.1.1	59,800 X 1.5 = 89,700 S.F.
SEPARATION ON TWO SIDES	SEPARATION ON TWO SIDES: 86' WILBUR–20'=66' XX' VICTORY–20'=XX'
AREA INCREASES PER 505.3	89,700 x 2= 179,400
ALLOWABLE BUILDING AREA	**179,400 S.F.**

ACTUAL BUILDING AREA BY TYPE OF CONSTRUCTION	
TYPE I F.R.	
GARAGE LEVEL	55,324
TYPE II F.R.	
GROUND FLOOR	42,425
SECOND FLOOR	42,860
THIRD FLOOR	42,860
FOURTH FLOOR	42,860
TOTAL	226,329 S.F.

BUILDING TABULATIONS SUMMARY

BUILDING AREA	AREA OCCUPANCY	****BUILDING AREA BY OCCUPANCY	TOTAL CONST. AREA (S.F.)	CONSTRUCTION TYPE	*ALLOWABLE AREA (S.F.)	**ALLOWABLE AREA INCREASE	TOTAL ALLOWABLE AREA	OCCUPANCY RATIO	FIRE SPRINKLERS
UNDERGROUND GARAGE	A–3/S–3	5,185/50,139	55,324	I F.R./II F.R.	UL/29,900	UL/29,900	UNLIMITED	–	YES
COMMON AREAS GROUND FLOOR AND RESIDENTIAL UNITS ALL LEVELS)	A–3/R–2.1	17,789/153,266	171,055	II F.R.	29,900/29,900	149,500	179,400	.94	YES
BUILDING TOTALS	S–3/ /A–3 /R2.1	50,139 22,974 153,266	226,379	I F.R. II F.R.	UNLIMITED 29,900	UNLIMITED 149,500	UNLIMITED 179,400	.97	YES

OVERALL PLUMBING FIXTURE TABULATION FOR COMMON AREAS

STAFF BASED ON 20 STAFF MEMBERS – 10 MALE, 10 FEMALE	W.C.	URINALS	LAV.	PROVIDED W.C.	PROVIDED URINALS	PROVIDED LAV.	PROVIDED SHOWERS
	REQUIRED M 1:15 F 1:15	REQUIRED 0:9 –	REQUIRED 1:40 1:40				
MEN'S	1	0	1	1	0	1	NA
WOMEN'S	1	–	1	1	–	1	NA
***RESIDENTS BASED ON 195 RES.–98M & 98F	M 1:25 F 1:20	1:50 –	1:10 UP TO 100				
MEN'S	4	2	11	3	3	6	NA
WOMEN'S	7	–	11	7	–	7	NA
UNISEX	–	–	–	2	–	7	NA
TOTAL COUNT	13	2	22	14	3	22	NA

* CPC TABLE 4–1. "INSTITUTIONAL CATEGORY FOR EMPLOYEES & RESIDENTS"
** CBC SEC 505.1.1 (SEE ALLOWABLE AREA INCREASE TABULATIONS FOR TYPE II F.R. CONST.)***
*** RESIDENTS OCC. LOAD: 65 (NUMBER OF 2 BD UNITS) x 2 + 21.5 (HALF OF 1 BDRM. UNITS) x 2 + 21.5 (HALF OF 12 BDRM UNITS) x 1 = 195 (196) PEOPLE
**** TOTAL BUILDING OCCUPANCY CONSTRUCTION AREA
***** CBC SEC 504.3

RESIDENTIAL UNITS TABULATIONS

UNIT	AREA (S.F.)	UNIT	AREA (S.F.)	UNIT	AREA (S.F.)
1BJ–A (8)	783	1B–F (3)	787	2B–CW (4)	1,149
1BJ–B (3)	1,024	1B–G (3)	865	2B–C–1 (4)	1,271
1BJ–C (1)	797	1B–H (3)	1,403	2B–D (11)	1,135
1B–A (8)	958	2B–A (12)	1,430	2B–DW (4)	1,135
1B–B (2)	1,004	2B–B (6)	1,345	2B–E (3)	1,155
1B–C (6)	954	2B–B–1 (4)	1,336	2B–F (3)	1,286
1B–D (3)	916	2B–B TOWER (3)	1,293	2B–G (3)	1,525
1B–E (3)	1,050	2B–C (8)	1,149		
TOTAL UNITS S.F.:					122,640

SITE:

BUILDING FOOTPRINT AREA	(1.30 AC) 56, 830 S.F.
TOTAL SITE AREA	(7.3. AC.) 318, 445 S.F.
ZONNING:	RA–1
BUILDING OCCUPANCIES:	R2.1; S–3
OPEN AREA REQUIRED/PROVIDED:	14,175/15,076 S.F.
CUP CASE No.:	CPC 2004–7469 CU
DISTRICT MAP:	177B121

BUILDING DATA:

CONSTRUCTION TYPE	II–FR / I F.R.
BUILDING OCCUPANCIES	R2.1; S–3
AREA SEPARATION	3 HR BETWEEN S–3 & R2.1; 2 HR BETWEEN R2.1 UNITS
NUMBER OF STORIES	4 ABOVE GROUND + BASEMENT
EXTERIOR WALLS	2 HR
MECHANICAL SHAFT ENCLOSURES	2 HR
STAIRWAY CONSTRUCTION	2 HR
ELEVATOR SHAFT ENCLOSURES	2 HR

PARKING:

PARKING REQUIRED	103
ACCESSIBLE PARKING REQUIRED (PER CBC)	5
STANDARD PARKING PROVIDED	118
ACCESSIBLE PARKING PROVIDED	5
TOTAL PARKING PROVIDED	123

GENERAL PROJECT DATA, CODE ANALISYS AND TABULATIONS

Scale 1

WWC OT
Widom Wein Cohen O'Leary Terasawa
3130 Wilshire Boulevard
Sixth Floor
Santa Monica, California 90403
T (310) 828-6040
F (310) 453-9432
www.wwcot.com
Inland Empire
Palm Springs
Moorpark
Shanghai, China

RECEIVED
10:08 am, Aug 14, 2008
FRAMEMAX

Building Department Submittal: June 1, 2007
Issued For Bid:
Issued For Construction:

KEY PLAN

Project:
Jewish Home for The Aging
FOUNTAINVIEW AT EISENBERG VILLAGE
6440 Wilbur Ave
Reseda, CA. 91335
JEWISH HOME FOR THE AGING
18855 Victory Blvd.
Reseda, CA 91335
Project Number: 04206.00

Exiting Analysis, Occupancy Calculatio and Gen. Project Data

Date: 04/05/2007
Drawn By:
Checked By:

G1.01
Sheet No.

File Path & Name: F:\PROJECTS\04206-00\A-CD\SHEETS_G1.01.DWG
© WWCOT 2006 May 28, 2007 - 03:32 pm

RECEIVED BY SUFFOLK ON 06/01/07

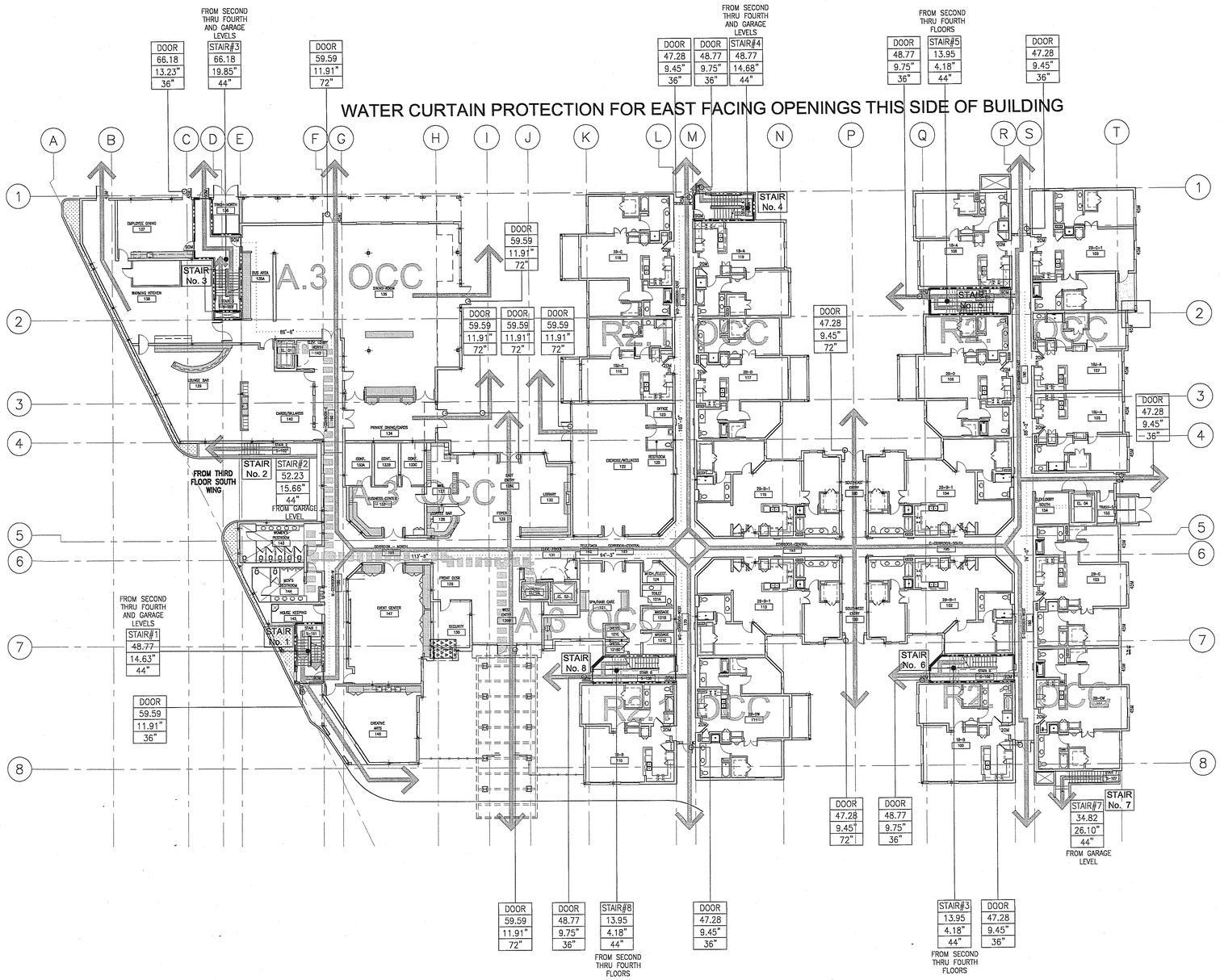

OCCUPANT LOAD CALCULATION:

OCCUPANCY CALCULATED:

ROOM NAME:	*AREA (S.F.)	O.L. FACTOR	OCCUPANTS	EXITS REQ/PROV
R2.1 OCCUPANCY				
[2]UNIT 2B-C-1 (109)	893	300	2.97	1/1
[2]UNIT 1B-J-A (107)	582	300	1.94	1/1
[2]UNIT 1B-J-A (105)	582	300	1.94	1/1
[2]UNIT 2B-C (103)	792	300	2.64	1/1
[2]UNIT 2B-CW (101)	795	300	2.65	1/1
[2]UNIT 1B-B (100)	788	300	2.62	1/1
[2]UNIT 2B-B-1 (102)	950	300	3.16	1/1
[2]UNIT 2B-B-1 (104)	950	300	3.16	1/1
[2]UNIT 2B-D (106)	771	300	2.57	1/1
[2]UNIT 1B-A (108)	745	300	2.48	1/1
[2]UNIT 1B-A (119)	745	300	2.48	1/1
[2]UNIT 2B-D (117)	771	300	2.57	1/1
[2]UNIT 2B-B-1 (115)	950	300	3.16	1/1
[2]UNIT 2B-B-1 (113)	950	300	3.16	1/1
[2]UNIT 2B-DW (111)	775	300	2.58	1/1
[2]UNIT 1B-B (110)	767	300	2.55	1/1
[2]UNIT 1BJ-C (116)	604	300	2.01	1/1
[2]UNIT 2B-C (118)	792	300	2.64	1/1
TOTAL FOR R2.1 OCCUPANCY	14, 202		47.28	2/7
A-3 OCCUPANCY				
[1]EMPLOYEE DINING (137)	402	15	26.8	1/1
[16]WARMING KITCHEN (138)	1, 109	200	5.54	1/1
[1]DINING ROOM (135)	3, 160	15	210.00	2/2
[1]PRIVATE DINING (134)	411	15	27.40	1/1
[20]CARDS/BILLIARDS (140)	592	100	5.92	1/1
[1]LOUNGE BAR (139)	845	15	56.33	1/1
[3]HOUSEKEEPING (145)	96	300	.32	1/1
[1]EVENT CENTER (147)	842	100	8.42	1/1
[3]CREATIVE ARTS (146)	540	50	10.80	1/1
[2]FRONT DESK (129)	154	100	1.54	1/1
[2]SECURITY (130)	187	100	1.87	1/1
[1]WEST ENTRY (126W)	291	7	41.57	1/1
[2]SPA/HAIR CARE (121)	753	100	7.53	1/1
[2]BUSSINESS CENTER (133)	354	100	3.54	1/1
[1]CONFERENCE (133A)	125	15	8.33	1/1
[1]CONFERENCE (133B)	108	15	7.20	1/1
[1]CONFERENCE (133C)	106	15	7.06	1/1
[3]MAIL (127)	148	100	1.48	1/1
[3]COFFEE BAR (91)	91	100	.95	1/1
[1]LIBRARY (132)	925	50	18.50	1/1
[1]EXERCISE/WELLNESS (122)	1, 282	50	25.64	1/1
TOTAL FOR A-3 OCCUPANCY	12, 521		476.74	2/8
FLOOR TOTALS	26, 723		524.02	4/15

*NOTE: WALL THICKNESS, WASHER/DRYER CLOSET, CLOSETS, CORRIDORS AND RESTROOMS AREAS WERE NOT TAKEN INTO OCCUPANCY LOAD CALCULATION.

** EXIT TABULATIONS:

R2.1 OCCUPANCY:	
TOTAL EXIT WIDTH REQUIRED (47.28 TOTAL OCC. x .2)	9.45 IN
TOTAL EXIT WIDTH PROVIDED (IN 7 DOORS)	324.00 IN
STAIRS #1 & 4 EXIT WIDTH REQUIRED (48.77 x .3)	14.63 IN
STAIRS #1 & 4 EXIT WIDTH PROVIDED	44.00 IN
A-3 OCCUPANCY:	
TOTAL EXIT WIDTH REQUIRED (476.74 TOTAL OCC. x .2)	95.34 IN
TOTAL EXIT WIDTH PROVIDED (IN 8 DOORS)	504.00 IN
STAIR #3 EXIT WIDTH REQUIRED (66.18 x .3)	19.85 IN
STAIR #3 EXIT WIDTH PROVIDED	44.00 IN

ALLOWABLE FLOOR AREA FOR MIXED OCCUPANCIES: (SEC 504.3)

R-2.1 OCCUPANCY: 12,521 / XX,XXX + A-3 OCCUPANCY: 14,202 / XX,XXX = .XX + .XX = .XX < 1

** CBC SECT. 1003.2.3.2; 1003.3.1.1 AND TABLE 10-B

**** PROVIDED PLUMBING FIXTURE TABULATION

FIXTURE	***** RESIDENT MALE	FEMALE	UN-ASSIGN	TOTALS FOR THIS LEVEL
WATER CLOSET	2	6	–	8
URINAL	3	–	–	3
LAVATORIES	4	5	–	9
SHOWERS	–	–	–	–

**** SEE OVERALL PLUMBING FIXTURE CALCULATION FOR MINIMUM REQUIREMENTS
***** FOR PERMANENT RESIDENT USE AND STAFF

BUILDING LEVEL CALCULATIONS

Scale 2

1. ALL EXTERIOR WALLS TO BE CONSTRUCTED OF 2-HR FIRE RATED CONSTRUCTION
2. AAL EXTERIOR OPENINGS ON SOUTH AND EAST SIDE OF BUILDING SHALL BE PROTECTED
3. ALL INTERIOR UNIT BEARING WALLS TO BE OF 2-HR FIRE RATED CONSTRUCTION
4. ALL INTERIOR NON-BEARING WALLS TO BE OF 1-HR FIRE RATED CONSTRUCTION
5. ALL INTERIOR CORRIDOR WALLS TO BE OF 2-HR FIRE RATED CONSTRUCTION
6. ALL SHAFT WALLS TO BE OF 2-HR RATED CONSTRUCTION
7. FLOOR / CEILING ASSEMBLIES BETWEEN GROUND FLOOR AND FOURTH FLOOR TO BE OF 2-HR FIRE RATED CONSTRUCTION
8. FLOOR / CEILING ASSEMBLY BETWEEN GARAGE LEVEL AND GROUND FLOOR TO BE OF 3-HR RATED CONSTRUCTION
9. REFER TO SHEET A2 SERIES FOR WALL TYPE LOCATION & DESIGNATION AND SHEET A8._ FOR WALL TYPE SCHEDULE

PLAN NOTES

Scale 1

GROUND FLOOR EXITING AND OCCUPANCY ANALYSIS

Scale 1/16" = 1'-0" 5

WWC OT
Widom Wein Cohen O'Leary Terasawa
3130 Wilshire Boulevard
Sixth Floor
Santa Monica, California 90403
T (310) 828-0040
F (310) 453-9432
www.wwcot.com
Inland Empire
Palm Springs
Moorpark
Shanghai, China

RECEIVED
10:08 am, Aug 14, 2008
FRAMEMAX

Building Department Submittal: June 1, 2007
Issued For Bid:
Issued For Construction:

KEY PLAN

Project:
Jewish Home for The Aging
FOUNTAINVIEW AT EISENBERG VILLAGE
6440 Wilbur Ave
Reseda, CA. 91335

JEWISH HOME FOR THE AGING
18855 Victory Blvd.
Reseda, CA 91335
Project Number: 04206.00

Exiting Analysis and Occupancy Calculatio

Date: 04/05/2007
Drawn By:
Checked By:

G1.02
Sheet No.

File Path & Name: F:\PROJECTS\04206.00\A-CD\SHEETS_G1.02.DWG
© WWCOT 2006 May 28, 2007 - 03:32 pm

RECEIVED BY SUFFOLK ON 06/01/07

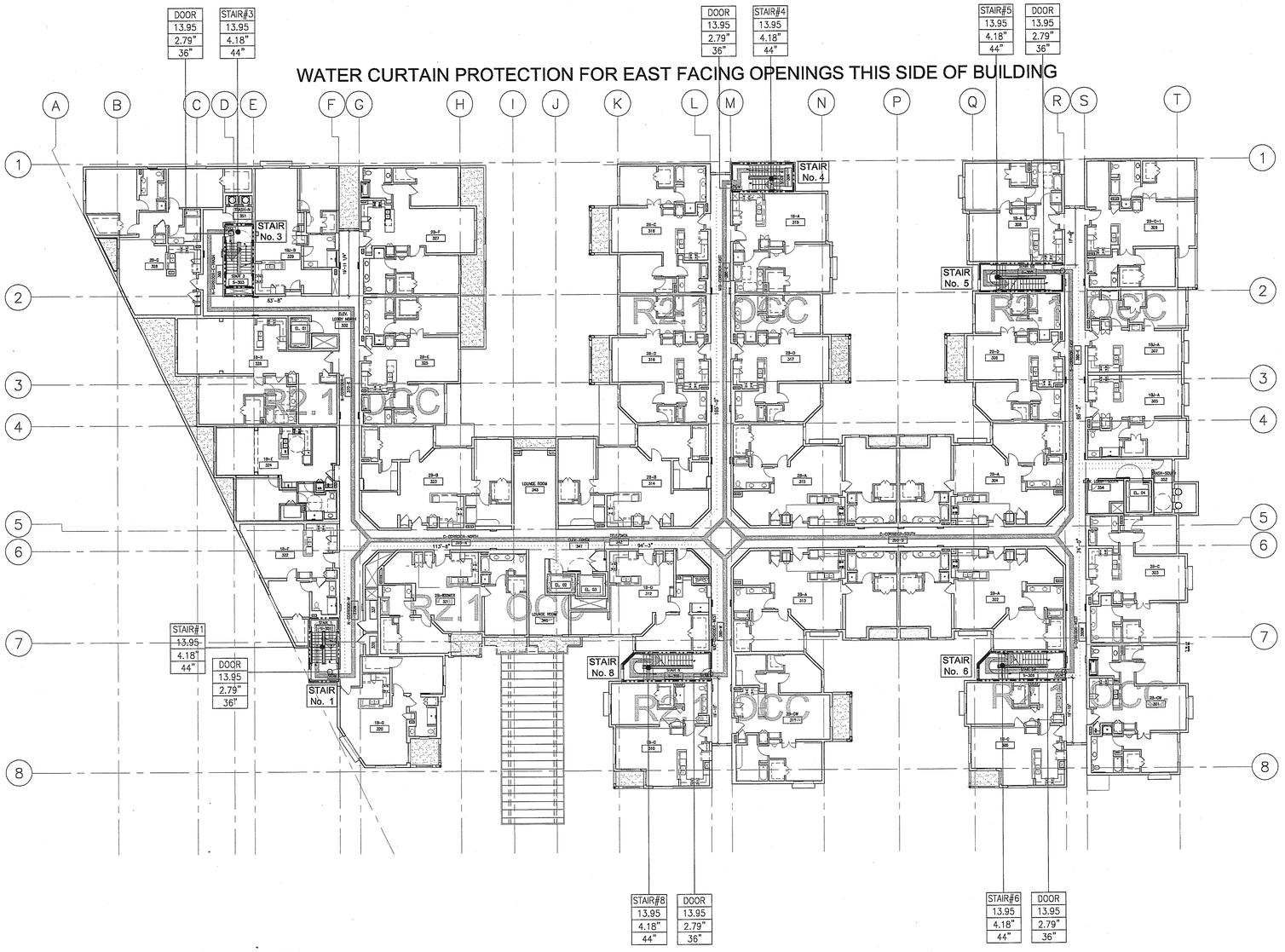

OCCUPANT LOAD CALCULATION:

OCCUPANCY CALCULATED:

ROOM NAME:	*AREA (S.F.)	O.L. FACTOR	OCCUPANTS	EXITS REQ/PROV
R2.1 OCCUPANCY				
3UNIT 2B-G (328)	1,124	300	3.74	1/1
3UNIT 1B-J-B (329)	831	300	2.77	1/1
3UNIT 1B-H (326)	1,176	300	3.92	1/1
3UNIT 1B-E (324)	856	300	2.85	1/1
3UNIT 1B-F (322)	666	300	2.22	1/1
3UNIT 1B-G (320)	674	300	2.24	1/1
3UNIT 2B-B TOWER (321)	889	300	2.96	1/1
3UNIT 2B-B (323)	958	300	3.19	1/1
3UNIT 2B-E (325)	792	300	2.64	1/1
3UNIT 2B-F (327)	924	300	3.08	1/1
3UNIT 2B-C (318)	792	300	2.64	1/1
3UNIT 2B-D (316)	771	300	2.57	1/1
3UNIT 2B-B (314)	958	300	3.19	1/1
3UNIT 1B-D (312)	779	300	2.59	1/1
3UNIT 1B-C (310)	767	300	2.55	1/1
3UNIT 2B-DW (311)	775	300	2.55	1/1
3UNIT 2B-A (313)	1,047	300	3.49	1/1
3UNIT 2B-A (315)	1,047	300	3.49	1/1
3UNIT 2B-D (317)	771	300	2.57	1/1
3UNIT 1B-A (319)	745	300	2.48	1/1
3UNIT 1B-A (308)	745	300	2.48	1/1
3UNIT 2B-D (306)	771	300	2.57	1/1
3UNIT 2B-A (304)	1,047	300	3.49	1/1
3UNIT 2B-A (302)	1,047	300	3.49	1/1
3UNIT 1B-C (300)	767	300	2.55	1/1
3UNIT 2B-CW (301)	795	300	2.65	1/1
3UNIT 1B-J-A (303)	582	300	1.94	1/1
3UNIT 1B-J-A (305)	582	300	1.94	1/1
3UNIT 1B-J-A (307)	582	300	1.94	1/1
3UNIT 2B-C-1 (309)	893	300	2.97	1/1
TOTAL FOR S-3	25, 153		83.75	2/6

*NOTE: WALL THICKNESS, WASHER/DRYER CLOSET, CLOSETS, CORRIDORS AND RESTROOMS AREAS WERE NOT TAKEN INTO OCCUPANCY LOAD CALCULATION.

** EXIT TABULATIONS:

R2.1 OCCUPANCY:	
TOTAL STAIR WIDTH REQUIRED (83.75 TOTAL OCC. LOAD x .3)	25.12 IN
TOTAL STAIR WIDTH PROVIDED (IN 6 STAIRS)	264.00 IN
TOTAL EXIT WIDTH REQUIRED (83.75 TOTAL OCC. x .2)	16.75 IN
TOTAL EXIT WIDTH PROVIDED (IN 6 DOORS)	216.00 IN

ALLOWABLE FLOOR AREA FOR MIXED OCCUPANCIES: (SEC 504.3)

** CBC SECT. 1003.2.3.2; 1003.3.1.1 AND TABLE 10-B

**** PROVIDED PLUMBING FIXTURE TABULATION

	STAFF			***** PUBLIC			TOTALS FOR THIS LEVEL
	MALE	FEMALE	UN-ASSIGN	MALE	FEMALE	UN-ASSIGN	
WATER CLOSET	–	–	–	–	–	–	–
URINAL	–	–	–	–	–	–	–
LAVATORIES	–	–	–	–	–	–	–
SHOWERS	–	–	–	–	–	–	–

**** SEE OVERALL PLUMBING FIXTURE CALCULATION FOR MINIMUM REQUIREMENTS
***** FOR PERMANENT RESIDENT USE

BUILDING LEVEL CALCULATIONS

Scale 2

1. ALL EXTERIOR WALLS TO BE CONSTRUCTED OF 2-HR FIRE RATED CONSTRUCTION

2. AAL EXTERIOR OPENINGS ON SOUTH AND EAST SIDE OF BUILDING SHALL BE PROTECTED

3. ALL INTERIOR UNIT BEARING WALLS TO BE OF 2-HR FIRE RATED CONSTRUCTION

4. ALL INTERIOR NON-BEARING WALLS TO BE OF 1-HR FIRE RATED CONSTRUCTION

5. ALL INTERIOR CORRIDOR WALLS TO BE OF 2-HR FIRE RATED CONSTRUCTION

6. ALL SHAFT WALLS TO BE OF 2-HR RATED CONSTRUCTION

7. FLOOR / CEILING ASSEMBLIES BETWEEN GROUND FLOOR AND FOURTH FLOOR TO BE OF 2-HR FIRE RATED CONSTRUCTION

8. FLOOR / CEILING ASSEMBLY BETWEEN GARAGE LEVEL AND GROUND FLOOR TO BE OF 3-HR RATED CONSTRUCTION

9. REFER TO SHEET A2 SERIES FOR WALL TYPE LOCATION & DESIGNATION AND SHEET A8._ FOR WALL TYPE SCHEDULE

SECOND THROUGH FOURTH FLOORS EXITING AND OCCUPANCY ANALYSIS — Scale X" = 1'-0" 5

PLAN NOTES — Scale 1

WWC OT
Widom Wein Cohen O'Leary Terasawa
3130 Wilshire Boulevard
Sixth Floor
Santa Monica, California 90403
T (310) 828-0040
F (310) 453-9432
www.wwcot.com
Inland Empire
Palm Springs
Moorpark
Shanghai, China

RECEIVED
10:08 am, Aug 14, 2008
FRAMEMAX

Building Department Submittal: June 1, 2007
Issued For Bid:
Issued For Construction:

KEY PLAN

Project:
Jewish Home for The Aging
FOUNTAINVIEW AT EISENBERG VILLAGE
6440 Wilbur Ave
Reseda, CA. 91335

JEWISH HOME FOR THE AGING
18855 Victory Blvd.
Reseda, CA 91335
Project Number: 04206.00

Exiting Analysis and Occupancy Calculatio

Date: 04/05/2007
Drawn By:
Checked By:

G1.03
Sheet No.

File Path & Name: F:\PROJECTS\04206-00\A-CD\SHEETS_G1.03.DWG
© WWCOT 2006 May 28, 2007 - 03:52 pm

RECEIVED BY SUFFOLK ON 06/01/07

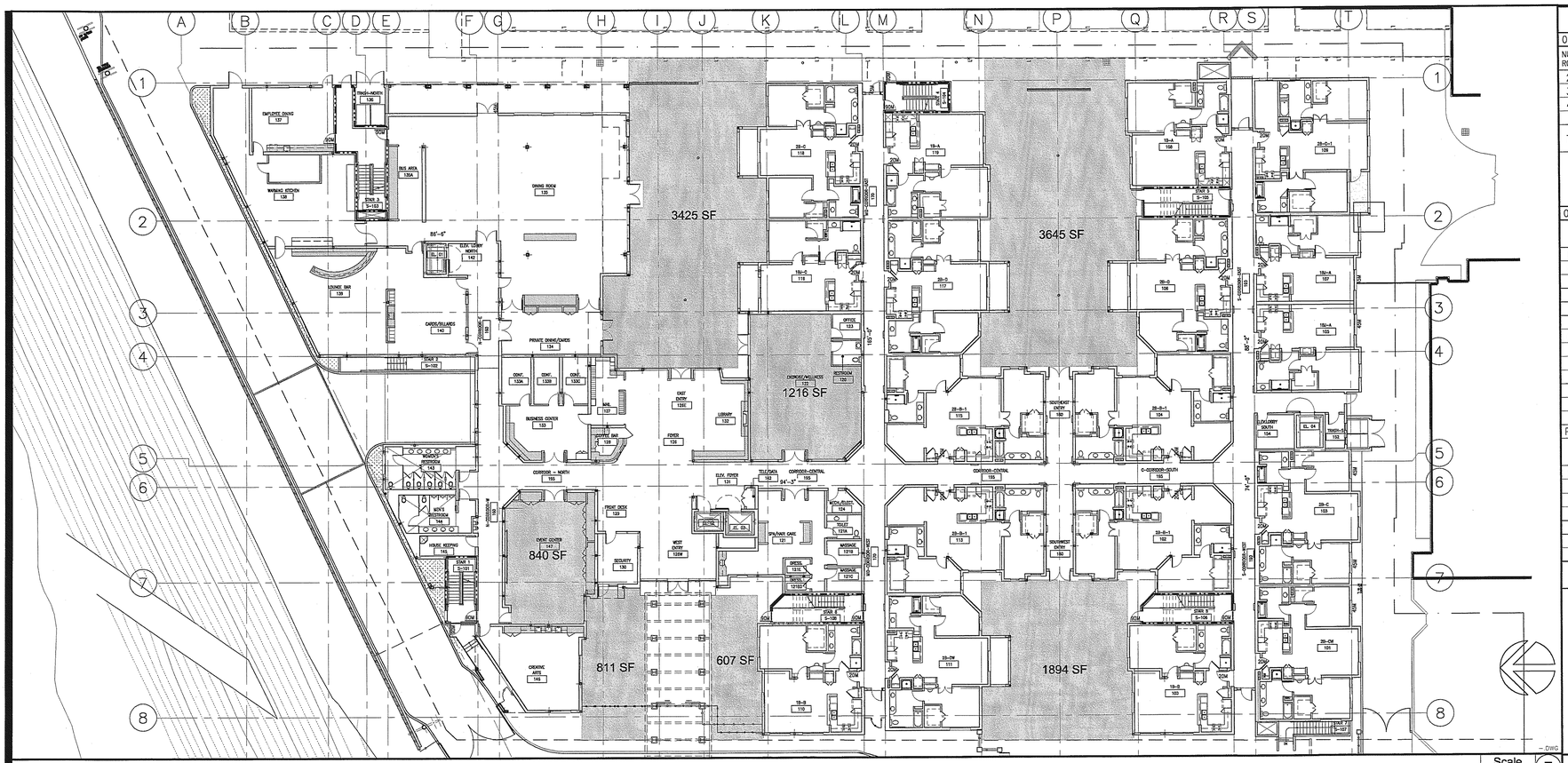

GROUND FLOOR - OPEN SPACE DIAGRAM

Scale 1/16" = 1'-0" 7

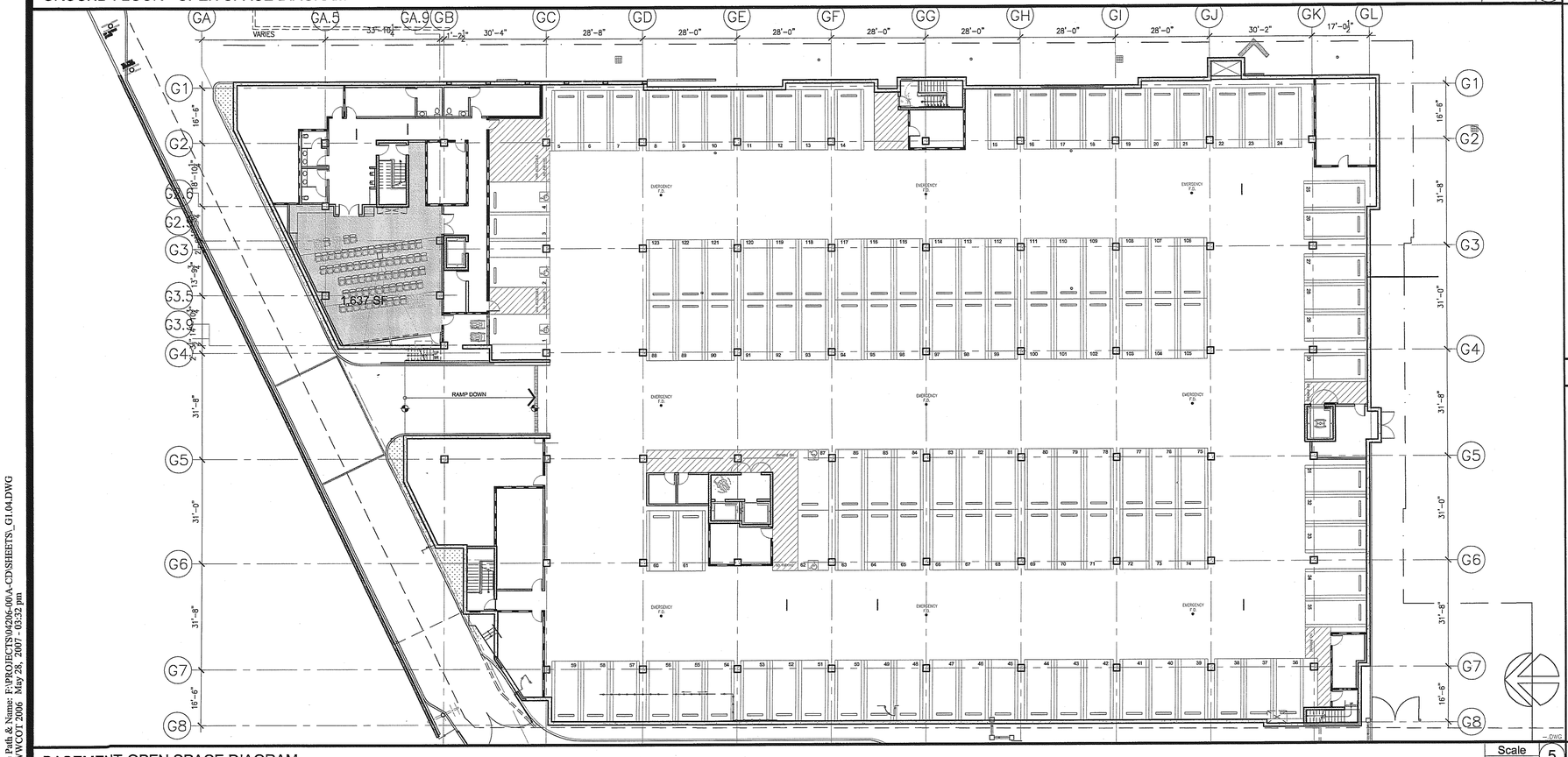

BASEMENT-OPEN SPACE DIAGRAM

Scale 1/16" = 1'-0" 5

OPEN SPACE REQUIREMENT CALCULATIONS

OPEN SPACE REQUIRED:

NUMBER OF HABITABLE ROOMS PER UNIT	NUMBER OF UNITS	OPEN SPACE REQ. PER UNIT	OPEN SPACE SUB TOTAL
2 HABITABLE ROOMS	31	X 100 SF	3,100 SF
3 HABITABLE ROOMS	48	X 125 SF	6,000 SF
4 HABITABLE ROOMS	29	X 175 SF	5,075 SF
TOTAL	108	-	14,175 SF

OPEN SPACE PROVIDED

COMMON OPEN SPACE PROVIDED	TYPE OF SPACE	OPEN SPACE PER AREA	OPEN SPACE SUB TOTAL
BASEMENT REC ROOM	SCREENING RM		1,637 SF
GROUND FLOOR INDOOR-REC RM	EVENT CENTER		840 SF
	EXERCISE/WELLNESS		1,216 SF
RECREATION RM COMMON OPEN SPACE TOTAL			3,544 SF*
GROUND FLOOR OUTDOOR	COURTYARD 1	811+ 607	1,418 SF
	COURTYARD 2		1,894 SF
	COURTYARD 3		3,425 SF
	COURTYARD 4		3,645 SF
GROUND FLOOR OUTDOOR OPEN SPACE SUBTOTAL			10,382 SF

PRIVATE OPEN SPACE PROVIDED

COMMON OPEN SPACE PROVIDED	TYPE OF SPACE	OPEN SPACE PER AREA	OPEN SPACE SUB TOTAL
SECOND FLOOR BALCONY	11	X 50 SF	550 SF
THIRD FLOOR BALCONY	10	X 50 SF	500 SF
FOURTH FLOOR BALCONY	2	X 50 SF	100 SF
PRIVATE OPEN SPACE SUBTOTAL			1,150 SF

GRAND TOTAL 15,076 SF

* TOTAL RECREATION ROOM AREA (3,693 SF) IS MORE THAN 25% OF TOTAL REQUIREMENT BY 149 SF. ONLY 3,544 SF.(25%) IS COUNTED AS COMMON OPEN SPACE.

OPEN AREA TABULATION MATRIX

Scale 3

OPEN AREA BEING CALCULATED AS PER LOS ANGELES ZONNING CODE, SECTION 12.21G

LEGEND

Scale 2

NOTES:

1. 100 SF OF OPEN SPACE TO BE PROVIDED PER UNIT WITH LESS THAN THREE HABITABLE ROOMS
2. 125 SF OF OPEN SPACE TO BE PROVIDED PER UNIT WITH THREE HABITABLE ROOMS
3. 175 SF OF OPEN SPACE TO BE PROVIDED PER UNIT WITH MORE THAN THREE HABITABLE ROOMS .
4. DEN IS COUNTED AS HABITABLE ROOM.
5. COMMON OPEN SPACE TO BE OPEN TO THE SKY, ACCESSIBLE, AND MIN. AREA OF 400 SF WITH NO HORIZONTAL DIMENSION LESS THAN 15 FT.
6. RECREATION ROOMS AT LEAST 600 SF MAY QUALIFY AS COMMON OPEN SPACE UP TO 25% OF THE TOTAL REQUIRED USABLE OPEN SPACE (3,544 SF).
6. BALCONY WITH MIN. 50 SF AREA AND NO HORIZONTAL DIM. LESS THAN 6 FT IS COUNTED AS PRIVATE OPEN SPACE 50 SF MAX PER UNIT.

OPEN AREA NOTES

Scale 1

WWC OT
Widom Wein Cohen O'Leary Terasawa

3130 Wilshire Boulevard
Sixth Floor
Santa Monica, California 90403
T (310) 828-0340
F (310) 453-9432
www.wwcot.com

Inland Empire
Palm Springs
Moorpark
Shanghai, China

RECEIVED
10:08 am, Aug 14, 2008
FRAMEMAX

Building Department Submittal: June 1, 2007
Issued For Bid:
Issued For Construction:

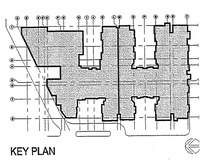

KEY PLAN

Project:
Jewish Home for The Aging
FOUNTAINVIEW AT EISENBERG VILLAGE

6440 Wilbur Ave
Reseda, CA. 91335

JEWISH HOME FOR THE AGING
18855 Victory Blvd.
Reseda, CA 91335

Project Number: 04206.00

Open Area Analysis

Date: 04/05/2007
Drawn By:
Checked By:

G1.04
Sheet No.

File Path & Name: F:\PROJECTS\04206-00\A-CD'S\SHEETS_G1.04.DWG
© WWCOT 2006 May 28, 2007 - 03:32 pm

RECEIVED BY SUFFOLK ON 06/01/07

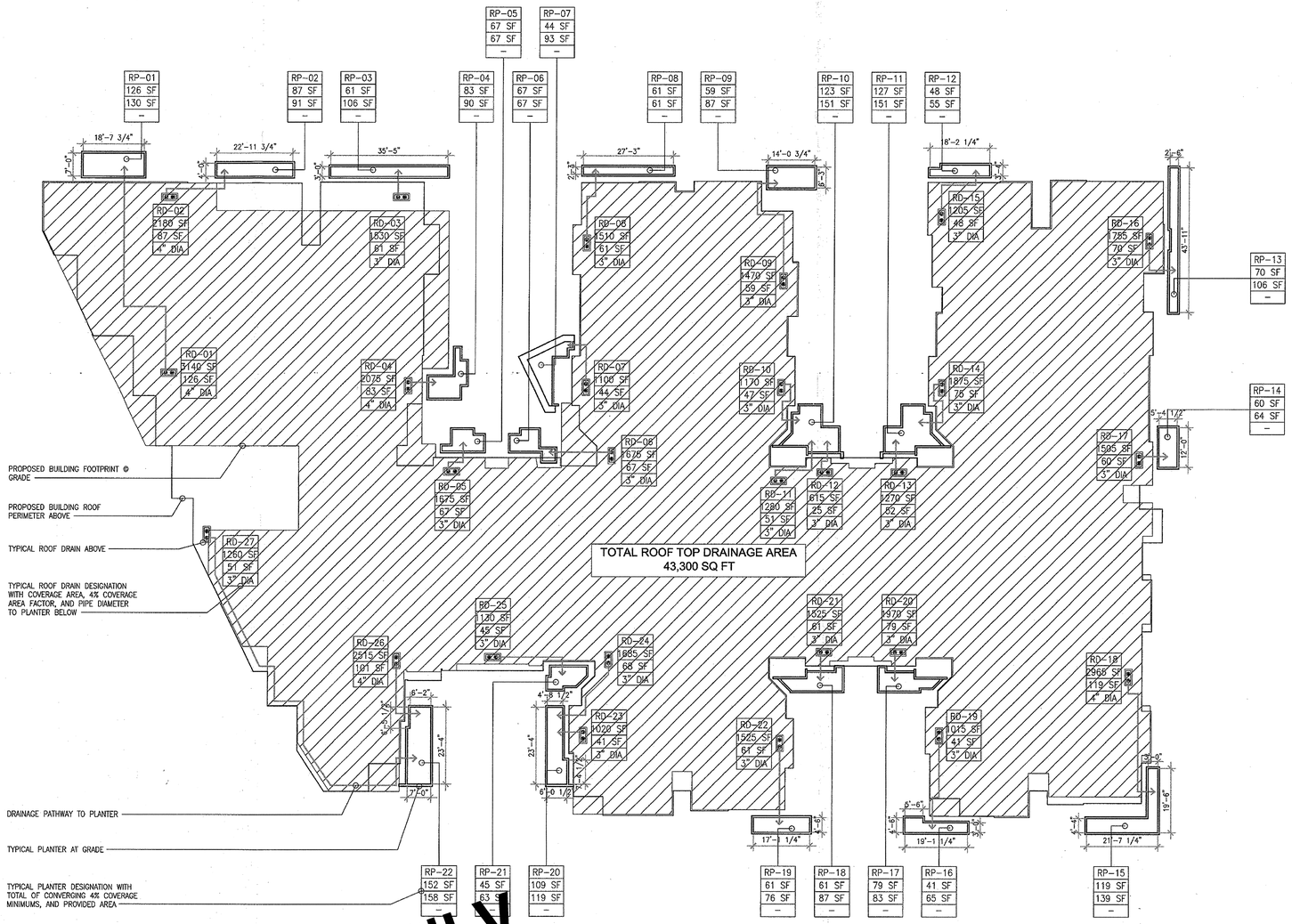

FOR REFFERENCE ONLY

PLANTER STORM WATER RETENTION SYSTEM SCHEMATIC — Scale X" = 1'-0" — 5

ROOF DRAIN STORM WATER LOADS TABULATIONS

ROOF DRAIN NUMBER	COVERAGE	4% OF COVERAGE	TO PLANTER #	NOTES
RD-01	3140 SF	126 SF	RP-02	–
RD-02	2180 SF	87 SF	RP-01	–
RD-03	1530 SF	61 SF	RP-03	–
RD-04	2075 SF	83 SF	RP-04	–
RD-05	1675 SF	67 SF	RP-05	–
RD-06	1675 SF	67 SF	RP-06	–
RD-07	1100 SF	44 SF	RP-07	–
RD-08	1510 SF	61 SF	RP-08	–
RD-09	1470 SF	59 SF	RP-09	–
RD-10	1170 SF	47 SF	RP-10	–
RD-11	1280 SF	51 SF	RP-10	–
RD-12	615 SF	25 SF	RP-10	–
RD-13	1270 SF	52 SF	RP-11	–
RD-14	1875 SF	75 SF	RP-11	–
RD-15	1205 SF	48 SF	RP-12	–
RD-16	1755 SF	70 SF	RP-13	–
RD-17	1505 SF	60 SF	RP-14	–
RD-18	2965 SF	119 SF	RP-15	–
RD-19	1015 SF	41 SF	RP-16	–
RD-20	1970 SF	79 SF	RP-17	–
RD-21	1525 SF	61 SF	RP-18	–
RD-22	1525 SF	61 SF	RP-19	–
RD-23	1120 SF	41 SF	RP-20	–
RD-24	1685 SF	68 SF	RP-20	–
RD-25	1130 SF	45 SF	RP-21	–
RD-26	2515 SF	101 SF	RP-22	–
RD-27	1260 SF	51 SF	RP-22	–
TOTALS (SQUARE FEET)	43,360	1,750		

RETENTION PLANTER WATER LOADS TABULATIONS

RETENTION PLANTER NUMBER	STORM WATER FROM RD #'S	COVERAGE @ RD AREA	4% OF AREA COVERED	PROVIDED AREA	PROVIDED EARTH VOL
RP-01	RD-01	3140 SF	126 SF	130 SF	357 CUBIC
RP-02	RD-02	2180 SF	87 SF	91 SF	250 CUBIC
RP-03	RD-03	1530 SF	61 SF	106 SF	291 CUBIC
RP-04	RD-04	2070 SF	83 SF	90 SF	247 CUBIC
RP-05	RD-05	1675 SF	67 SF	67 SF	184 CUBIC
RP-06	RD-06	1675 SF	67 SF	67 SF	184 CUBIC
RP-07	RD-07	1100 SF	44 SF	93 SF	255 CUBIC
RP-08	RD-08	1510 SF	61 SF	61 SF	167 CUBIC
RP-09	RD-09	1470 SF	59 SF	87 SF	239 CUBIC
RP-10	RD-10,11,12	3065 SF	123 SF	151 SF	415 CUBIC
RP-11	RD-13,14	3145 SF	127 SF	151 SF	415 CUBIC
RP-12	RD-15	1205 SF	48 SF	55 SF	151 CUBIC
RP-13	RD-16	1755 SF	70 SF	106 SF	291 CUBIC
RP-14	RD-17	1505 SF	60 SF	64 SF	176 CUBIC
RP-15	RD-18	2965 SF	119 SF	139 SF	382 CUBIC
RP-16	RD-19	1015 SF	41 SF	65 SF	178 CUBIC
RP-17	RD-20	1970 SF	79 SF	83 SF	228 CUBIC
RP-18	RD-21	1520 SF	61 SF	87 SF	239 CUBIC
RP-19	RD-22	1520 SF	61 SF	76 SF	209 CUBIC
RP-20	RD-23,24	2705 SF	109 SF	119 SF	327 CUBIC
RP-21	RD-25	1130 SF	45 SF	63 SF	173 CUBIC
RP-22	RD-26,27	3775 SF	152 SF	158 SF	434 CUBIC
TOTALS (SQUARE FEET)		43,360	1,750	2,105	5,792 CUBIC

STORMWATER PLAN APPROVED
☑ Standard Urban Stormwater Mitigation Plan (SUSMP)
☐ Site Specific Mitigation Plan
This set of plans and applications must be on job site during construction
BY _____ DATE 1-29-08
Watershed Protection Division
Bureau of Sanitation - Department of Public Works

PLANTER RETENTION CALCULATIONS — Scale 2

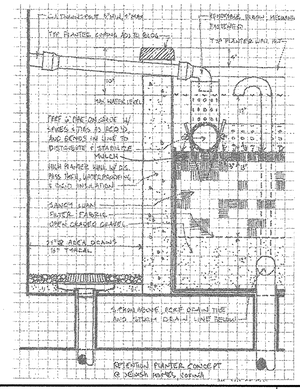

RETENTION PLANTER DETAIL — Scale 1

WWC OT
Widom Wein Cohen O'Leary Terasawa

3130 Wilshire Boulevard
Sixth Floor
Santa Monica, California 90403
T (310) 828-0040
F (310) 453-9432
www.wwcot.com

Inland Empire
Palm Springs
Moorpark
Shanghai, China

LICENSED ARCHITECT THOMAS A. CESTARTE No. C-28849 REN. 10/31/09 STATE OF CALIFORNIA

RECEIVED 10:08 am, Aug 14, 2008 FRAMEMAX

Building Department Submittal: June 1, 2007
Issued For Bid: _____
Issued For Construction: _____

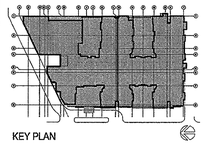

KEY PLAN

Project:
Jewish Home for The Aging
FOUNTAINVIEW AT EISENBERG VILLAGE
6440 Wilbur Ave
Reseda, CA. 91335

JEWISH HOME
JEWISH HOME FOR THE AGING
18855 Victory Blvd.
Reseda, CA 91335
Project Number: 04206.00

RAIN WATER & PLANTER RETENTION SYSTEM

Date: 01/21/2008
Drawn By: _____
Checked By: _____

G1.05
Sheet No.

File Path & Name: F:\PROJECTS\04206-00\A-CD\BASEPLANS\PLANS\STUDIES BY ALBERICO MELEAM-STORMWATER RETENTION PLAN.DWG
© WWCOT 2006 Jan 28, 2008 - 12:38 pm

MEANS OF EGRESS

1. PROVIDE ALL ILLUMINATED AND NON ILLUMINATED EXIT SIGNS AS INDICATED ON THE DRAWINGS AND AS REQUIRED BY THE LOCAL GOVERNING AUTHORITIES AND SECTION 1003.2.8 AND 1003.2.9 OF C.B.C.
2. PROVIDE 44 INCH MINIMUM AISLES TO REQUIRED EXITS IN PUBLIC AREAS CONTAINING PORTABLE FURNISHINGS.
3. VERIFY THAT ALL DOORS AND DOOR HARDWARE MEET THE REQUIREMENTS OF THE UNIFORM BUILDING CODE, CALIFORNIA CODE OF REGULATIONS (CCR), SECURITY CODE AND ALL OTHER GOVERNING CODES AND STANDARDS. NOTIFY THE ARCHITECT IMMEDIATELY IN CASE OF DISCREPANCY.
4. SEE C.F.C ARTICLE 87 FOR FIRE SAFETY DURING CONSTRUCTION.
5. MEANS OF EGRESS MUST HAVE CONTINUOUS, UNOBSTRUCTED AND UNDIMINISHED PATH TO A PUBLIC WAY.
6. EXIT DOORS SHALL BE OPENABLE FORM THE INSIDE WITHOUT THE USE OF A KEY, SPECIAL KNOWLEDGE OR EFFORT. FLUSH BOLTS OR SURGACE BOLTS ARE PROHIBITED. "APPLIES ALSO TO EXIT GATES". THE UNLATCHING OF ANY LEAF SHALL NOT REQUIRE MORE THAN ONE OPERATION.
7. THE EXIT SIGNS SHALL ALSO BE CONNECTED TO AN EMERGENCY ELECTRICAL SYSTEM PROVIDED FROM STORAGE BATTERIES, UNIT EQUIPMENT OR AN ON-SITE GENERATOR SET, AND THE SYSTEM SHALL BE INSTALLED IN ACCORDANCE WITH THE ELECTRICAL CODE. FOR HIGH-RISE BUILDINGS, SEE SECTION 403.
8. THE POWER SUPPLY FOR MEANS OF EGRESS ILLUMINATION SHALL NORMALLY BE PROVIDED BY THE PREMISES OF ELECTRICAL SUPPLY. IN THE EVENT OF ITS FAILURE, ILLUMINATOR SHALL BE AUTOMATICALLY PROVIDED FROM AN EMERGENCY SYSTEM FOR GROUP I, DIVISIONS 1.1 AND 1.2 OCCUPANCIES AND FOR ALL OTHER OCCUPANCIES WHERE THE MEANS OF EGRESS SYSTEM SERVES AN OCCUPANT LOAD PF 100 OR MORE.
9. THE PATH OF EXIT TRAVEL TO AND WITHING EXITS IN THIS BUILDING SHALL BE IDENTIFIED BY EXIT SIGNS CONFORMING TO THE REQUIREMENTS OF SECTION 1003.2.8 EXIT SIGNS SHALL BE READILY VISIBLE FROM ANY DIRECTION OF APPROACH. EXIT SIGNS SHALL BE LOCATED AS NECESSARY TO CLEARLY INDICATE THE DIRECTION OF EGRESS TRAVEL. NO POINT SHALL BE MORE THAN A 100 FEET (30480MM) FROM THE NEAREST VISIBLE SIGN.
10. THE EXITING HARDWARE ON THE EXTERIOR EXIT DOORS OF THIS BUILDING MUST MEET THE REQUIREMENTS OF SECTION 1003.3.1.9.
11. IF OCCUPANT LOAD IS 50 OR MORE, THE MINIMUM CLEAR WIDTH OF CORRIDOR IS 44 INCHES. (1004.3.4.2)
12. CORRIDORS REQUIRE 1-HOUR RATED WALLS AND CEILING CONSTRUCTION WHEN OCCUPANT LOAD IS 10 OR MORE. (1004.3.4.3.1)
13. DOOR(S)____ LOCATED IN A 1 HOUR CORRIDOR SHALL BE PROTECTED BY A 20-MINUTES TIGHT FITTING, SELF-CLOSING SMOKE AND DRAFT CONTROL DOOR AND FRAME ASSEMBLY WHICH BEARS AND APPROVED LABEL FOLLOWED BY THE LETTER "S". (1004.3.4.3.2.1)

NOTES ON TYPE V 1-HR CONSTRUCTION

1. CONTINUOUS DRYWALL BEHIND ALL TUBS IS REQUIRED UNLESS ALL WALLS ARE WITHIN THE UNIT AND NON-BEARING.
2. INTERIOR NON LOAD-BEARING PARTITIONS WITHIN INDIVIDUAL DWELLING UNITS IN APARTMENT HOUSES ARE SEPARATED FROM EACH OTHER AND FROM CORRIDORS BY NOT LESS THAN 1-HR FIRE RESISTIVE CONSTRUCTION (CONTINUOUS TO THE DECK).
3. CONTINUOUS DRYWALL IS REQUIRED BEHIND ALL PANEL SERVICE PANELS, FIRE HOSES AND MEDICINE CABINETS.
4. RECESSED CEILING LIGHT FIXTURES MUST BE BOXED IN FOUND WITH 5/8" TYPE 'X' DRYWALL TO MAINTAIN THE 1-HR CEILING ASSEMBLY.
5. ALL PLUMBING PENETRATING THROUGH WALLS WHICH REQUIRE PROTECTED OPENINGS ARE REQUIRED TO BE GALVANIZED, OR CAST IRON PIPING.
6. ALL PLUMBING PENETRATIONS THROUGH A HORIZONTAL OCCUPANCY SEPARATION SHALL BE BOXEDOUT AND FILLEDWITH APPROVED SAFING MATERIAL. INSULATION IS NOT APPROVED.
7. PLASTIC BATHROOM FANS IN THE CEILING OR LAUNDRY HOOKUP BOXES IN OCCUPANCY SEPARATION WALLS ARE NOT PERMITTED UNLESS SPECIFICALLY APPROVED BY A RECOGNIZED TESTING AGENCY.
8. EXHAUST FANS FROM THE BATHROOM MUST ENTER THROUGH THE WALL. DAMPERS ARE REQUIRED IF THE CEILING IS PENETRATED.
9. PLASTIC ELECTRICAL BOXES ARE TO BE APPROVED FOR 1-HR CONSTRUCTION.
10. PENETRATIONS OF 1-HR CEILING BY DUCTS FROM THE FAU AND THE STOVE HOOD REQUIRE DAMPERS. ATTIC UNITS, INCLUDING HEAT PUMPS REQUIRE DAMPERS AT ALL CEILING PENETRATIONS.

BEST MANAGEMENT PRACTICES

1. STORM WATER PROVISIONS ARE REQUIRED TO BE SHOWN ON THE PLANS IN ACCORDANCE WITH THE FOLLOWING REQUIREMENTS OF EXCEPTION 14, SECTION 106.4.1

   A. GENERAL CONSTRUCTION PERMIT PROJECTS- LARGE CONSTRUCTION SITES WITH FIVE ACRES OR MORE DISTURBED SOIL ARE REQUIRED TO COMPLY WITH THE STATE GENERAL PERMIT FOR CONSTRUTION ACTIVITY. THIS PERMITS REQUIRES THE SUBMITTAL OF A NOTICE OF INTENT TO THE STATE WATER RESOURCES CONTROL BOARD AND DEVELOPMENT OF A STATE STORM WATER POLLUTION PREVENTION PLAN. THE DEVELOPER IS REQUIRED TO SHOW PROOF OF THESE SUBMITTALS.

2. AN WET WEATHER EROSION CONTROL PLAN (WWECP), UTILIZING SEDIMENT AND EROSION CONTROL BMPS, JFOR PROJECTS THAT WILL LEAVE DISTURB SOIL DURING THE RAINY SEASON (OCTOBER 1 TO APRIL 15) IS REQUIRED. THE WWECP MUST BE PREPARED, FOR PROJECTS THAT HAVE ALREADY BROKEN GROUND, NOT LESS THAN 30 DAYS PRIORS TO THE BEGINNING OF EACH RAINY SEASON DURING WHICH SOIL WILL BE DISTURBED, AND IMPLEMENTED THROUHOUT THE ENTIRE RAINY SEASON. A COPY OF THE WWECP SHALL BE KEPT ON THE PROJECT SITE AT ALL TIMES BEGINNING 30 DAYS PRIOR TO THE START OF THE RAINY SEASON THROUGH THE END OF THE RAINY SEASON. FOR PROJECTS THAT WILL BEGIN CONSTRUCTION DURING THE RAINY SEASON, THE WWECP MUST BE AVAILABLE 30 DAYS BEFORE CONSTRUCTION COMMENCES. THE WWECP MUST BE AVAILABLE 30 DAYS BEFORE CONSTRUCTION COMMENCES. THE WWECP MUST BE SUBMITTED TO THE BUREAU OF ENGINEERING, PUBLIC WORKS FOR REVIEW AND APPROVAL. THE WWECP I NOT A REQUIEMENT FOR THE ISSUANCE OF A BUILDING OR GRADING PERMIT.

FIRE MARSHAL NOTES

1. FIRE RESISTIVE REQUIREMENTS PER TABLE 6-A C.B.C. SHALL BE PROVIDED WITHIN CONSTRUCTION LIMITS OF THE PROJECT.
2. MAINTAIN RATING WHERE ELECTRICAL PANELS, LIGHT FIXTURES, FIRE EXTINGUISHER CABINETS, TOILET ACCESSORIES, ETC., OCCUR IN RATED PARTITIONS OR CEILING.
3. FIRE EXTINGUISHERS SHALL BE PROVIDED AS REQUIRED BY FIRE MARSHAL. TRAVEL DISTANCE SHALL NOT BE MORE THAN 75' TO ANY FIRE EXTINGUISHER LOCATION. MOUNTED MAX. 48" ABOVE F.F.

   FIRE EXTINGUISHERS RATINGS:
   AS SPECIFIED; PROVIDE EXTINGUISHERS WITH THE FOLLOWING RATINGS IN THESE LOCATIONS:

   A. KITCHEN: 2-A:40BC MIN. RATING
   B. LIBRARY: 2-A:10BC MIN. RATING
   C. CAMPUS: 2-A:10BC MIN. RATING

4. FIRE STOPPING:

   A. PROVIDE INSULATION WITH FLAME SPREAD OF NOT MORE THAN 25 AND A SMOKE-DEVELOPED RATING OF NOT MORE THAN 50 WHEN TESTED AS A COMPOSITE INSTALLATION INCLUDING INSULATION, FACING MATERIALS, TAPES AND ADHESIVES AS NORMALLY APPLIED TO EXTERIOR SURFACE OF DUCTS.

   B. SEAL ALL PENETRATIONS THROUGH RATED WALLS AND FLOORS WITH A MATERIAL CAPABLE OF PREVENTING THE PASSAGE OF FLAMES AND HOT GASES WHEN SUBJECTED TO THE REQUIREMENTS OF THE TEST STANDARD SPECIFIC OF FIRE STOPS U.L. 1479 OR UBC STD 7.5.

      FLAME SPREAD 75

      SMOKE DENSITY 450

   C. FIRE DAMPERS SHALL BE PROVIDED WHERE DUCTS PENETRATE FIRE RATED WALLS OR CEILING (TITLE 24; CHAPTER 32, U.B.C.)

   D. BOTH SMOKE AND FIRE DAMPERS ARE REQUIRED FOR DUCT OPENINGS IN CORRIDORS.

5. FINISHES:

   A. ALL FLOOR FINISHES SHALL BE CLASS 1 PER NFPA 253. FLAME SPREAD FOR ALL WALL AND CEILING FINISHES SHALL NOT EXCEED 25. (SEE ALSO ITEM C BELOW).

   B. ANY DECORATIONS USED SHALL BE NONCOMBUSTIBLE OR FLAME PROOFED IN AN APPROVED MANNER.

   C. ALL FINISH MATERIALS SHALL COMPLY WITH THE REQUIREMENTS OF CBC CHAPTER 7, AND UBC STD 8-1:

      CORRIDOR CLASS II

      ROOMS

   D. ALL EXTERIOR AND INTERIOR WALL INSULATION SHALL BE NONCOMBUSTIBLE.

6. SIGNS AND COMMUNICATION:

   A. PROVIDE APPROVED ILLUMINATED EXITS SIGNS SELF-POWERED OR ELECTRICALLY ILLUMINATED AND ENERGIZED FROM SEPARATE CIRCUITS; ONE OF WHICH TO BE PART OF THE CRITICAL EMERGENCY SYSTEM (TO ENERGIZE WITHIN ONE SECOND OF A POWER FAILURE). EXIT PATH LIGHTING TO PART FROM THE EMERGENCY SYSTEM (ON UPS BACK-UP SEE ELECTRICAL FIXTURE SCHEDULE).

   B. EXIT SIGNS SHALL BE INTERNALLY OR EXTERNALLY ILLUMINATED. WHEN THE FACE OF AN EXIT SIGN IS ILLUMINATED FROM AN EXTERNAL SOURCE, IT SHALL HAVE AN INTENSITY OF NOT LESS THAN 5 FOOR CANDLES FROM EITHER OF TWO ELECTRIC LAMPS. INTERNALLY ILLUMINATED SIGNS SHALL PROVIDE EQUIVALENT LUMINANCE AND BE LISTED FOR THE PURPOSE. SEE (CBC 1003.2.8.4) FOR EXCEPTIONS.

7. INTERIOR FINISHES:

   A. INTERIOR FINISHES SHALL COMPLY WITH THE STANDARDS AS SET FORTH IN CBC 2001, CHAPTER 8.

   B. CURTAIN AT PLATFORM (NIC):

      TEXTILE MATERIAL SHALL MEET A FLAME SPREAD OF 76-200 (CLASS III) MIN. CBC TABLE 8-A & 8-B.

8. PROVIDE AN APPROVED FIRE ALARM SYSTEM AS REQUIRED BY CODE.
9. PROVIDE SMOKE DETECTOR IN THE COMMON STAIRWELLS SERVING TWO OR MORE TENANTS. (HEALTH AND SAFETY CODE 13113.7)
10. EACH LIGHT OF SAFETY GLAZING MATERIAL INSTALLED IN HAZARDOUS LOCATIONS AS DEFINED IN SECTION2406.4 SHALL BE IDENTIFIED BY A PERMANENT LABEL THAT SPECIFIES THE LABELER, AND STATES THAT SAFETY GLAZING MATERIAL HAS BEEN UTILIZED IN SUCH INSTALLATIONS.
11. DETAILS OF THE GUARDRAIL AT THE FLOOR AND ROOF OPENINGS, OCCUPIED ROOFS AND BALCONIES MORE THAN 30" ABOVE GRADE ARE REQUIRED. GUARDRAILS SHALL BE 42" IN HEIGHT, HAVE INTERMEDIATE RAILS OR BALUSTERS SPACED AT 4" MAX. AND BE DESIGNEDFOR 20 OR 50LBS/FT. LATERAL LOAD.
12. SMOKE AND FIRE DAMPERS ARE REQUIRED AT DUCT PENETRATIONS OF AREA OR OCCUPANCY SEPARATION WALLS, HORIZONTAL EXIT WALLS, FIRE-RATED SHAFTS, FIRE-RESISTIVE FLOOR-CEILING OR ROOF CEILING ASSEMBLIES, AND FIRE-RATEDCORRIDOR WALLS OR CEILINGS WHEN ANY EXTENSION OF THE DUCTS LEADS TO AN OPENING INTO THE CORRIDOR.
13. PENETRATIONS IN WALLS REQUIRING PROTECTED OPENINGS MUST BE FIRE STOPPED WITH AN APPROVED MATERIAL IN ACCORDANCE WITH SECTION 709.6. SPACE BETWEEN PENETRATING MATERIALS (DESCRIBED BELOW) MUST BE DESIGNED TO PREVENT THE MOVEMENT OF HOT FLAME OR GASES.

   A. COPPER OR FERROUS PIPES OR CONDUITS MAY PENETRATE THE WALLS OR PARTITIONS, PROVIDED THEY ARE FIRE STOPPED.

   B. OPENINGS FOR STEEL ELECTRICAL OUTLET BOXES NOT EXCEEDING 16 SQUARE INCHES ARE PERMITTED PROVIDED OPENINGS DO NOT AGGREGATE MORE THAN 100 SQUARE INCHES OR 100 SQUARE FEET OF WALL OR PARTITIONS. OUTLET BOXES ON OPPOSITE SIDES OF WALLS OR PARTITIONS MUST BE SEPARATED BY A HORIZONTAL DISTANCE OF 24 INCHES.

   C. WHERE WALLS ARE PENETRATED BY THE OTHER MATERIALS OR WHERE LARGER OPENINGS ARE REQUIRED THAN PERMITTED IN (B) ABOVE, THEY MUST BE QUALIFIED BY TESTS CONDUCTED IN ACCORDANCE WITH SECTION 703.2

14. SMOKE AND FIRE DAMPERS MUST BE INSTALLED IN THE FOLLOWING LOCATIONS PER SECTION 713.11:

   A. DUCT PENETRATIONS OF AREA OR OCCUPANCY SEPARATION WALLS WITH RATINGS OF TWO HOURS OR LESS.
   B. DUCTS PASSING THROUGH HORIZONTAL EXIT WALLS.
   C. DUCTS PENETRATING SHAFTS (SEE EXCEPTION).
   D. DUCTS PENETRATING FIRE-RESISTIVE ELEMENTS OF FIRE-RATED CORRIDOR WALLS. SEE EXCEPTION FOR STEEL DUCTS WITH NO OPENINGS INTO CORRIDOR.

SOUND REQUIREMENTS BETWEEN UNITS

1. IN GROUP R OCCUPANCIES, WALL AND FLOOR-CEILING ASSEMBLIES SEPARTING DWELLING UNITS OR GUEST ROOMS FROM EACH OTHER AND FROM PUBLIC SPACE SUCH AS INTERIOR CORRIDORS AND SERVICE AREAS SHALL PROVIDE AIRBORNE SOUND INSULATION FOR WALLS, AND BOTH AIRBORNE AND IMPACT SOUND INSULATION FOR FLOOR-CEILING ASSEMBLIES. ALL SUCH SEPARATING WALLS AND FLOOR-CEILING ASSEMBLIES SHALL PROVIDE AN AIRBORNE SOUND INSULATION EQUAL TO THAT REQUIRED TO MEET A SOUND TRANSMISSION CLASS (STC) F50 (45 IF FIELD TESTED). ALL SEPARATING FLOOR-CEILING SHALL PROVIDE IMPACT SOUND INSULATION EQUAL TO THAT REQUIRED TO MEET AN IMPACT INSULATION CLASS (IIC) OF 50 (45 IF FIELD TESTED).
   EXCEPTION: IMPACT SOUND INSULATION IS NOT REQUIRED FOR FLOOR-CEILING ASSEMBLIES OVER NON-HABITABLE ROOMS OR SPACES NOT DESIGNED TO BE OCCUPIED, SUCH AS GARAGES, MECHANICAL ROOMS OR STORAGE AREAS.
2. ALL PENETRATION INTO SOUND RATED PARTITIONS OR APPROVED PERMANENT RESILIENT SEALANT.~
3. ALL RIGID CONDUIT, DUCTS, PLUMBING PIPES, APPLIANCE VENTS LOCATED IN SOUND ASSEMBLIES SHALL BE ISOLATED FROM THE BUILDING CONSTRUCTION BY MEANS OF RESILIENT SLEEVES, MOUNTS OR MINIMUM ¼" THICK APPROVED RESILIENT MATERIAL. VENTS LOCATED IN SOUND ASSEMBLIES SHALL BE ISOLATED FROM THE BUILDING CONSTRUCTION BY MEANS OF RESILIENT SLEEVES, MOUNTS OR MINIMUM ¼" THICK APPROVED RESILIENT MATERIAL.
4. AN APPROVED PERMANENT, AND RESILIENT ACOUSTICAL SEALANT SHALL BE PROVIDED ALONG THE JOINT BETWEEN THE FLOOR AND THE SEPARATION WALLS. ~FLOOR CEILING ASSEMBLIES SHALL BE SEALED, LINED OR INSULATED WITH
5. CARPETS OR SIMILAR SURFACE MATERIAL WHICH ARE PART OF THE FLOOR-CEILING ASSEMBLY MUST BE INSTALLED AND INSPECTED BEFORE THE CERTIFICATE OF OCCUPANCY IS ISSUED AND MAY BE REPLACED ONLY BY OTHER FLOOR COVERING THAT PROVIDES THE REQUIRED IMPACT SOUND INSULATION. (1208A.3)
6. METAL VENTILATING AND CONDITIONED AIR DUCTS LOCATED IN SOUND ASSEMBLIES SHALL BE LINED. (EXCEPTION: DUCTS SERVING ONLY EXIT WAYS, KITCHEN COOKING FACILITIES, AND BATHROOMS NEED NOT BE LINED.)
7. MINERAL FIBER INSULATION SHALL BE INSTALLED IN JOIST SPACES WHENEVER A PLUMBING PIPING, OR DUCT PENETRATES A FLOOR-CEILING ASSEMBLY OR WHERE SUCH UNIT PASSES THROUGH THE PLANE OF THE FLOOR-CEILING ASSEMBLY FORM WITHING A WALL THE INSULATION SHALL BE INSTALLED TO A POINT 12" BEYOND THE PIPE OR DUCT. THIS REQUIREMENT IS NOT APPLICABLE TO FIRE SPRINKLER PIPE, GAS LINE OR ELECTRICAL CONDUIT.~
8. ELECTRICAL OUTLET BOXES IN OPPOSITE FACES OF SEPARATION WALLS SHALL BE SEPARATED HORIZONTALLY BY 24" AND NOTE THAT BACK AND SIDES OF BOXES WILL BE SEALED WITH ⅛" RESILIENT SEALANT AND BACKED BY A MINIMUM OF 2" THICK MINERAL FIBER INSULATION. (TV, TELEPHONE AND INTERCOM OUTLETS MUST BE INSTALLED IN BOXES ACCORDINGLY.)~
9. THE ENTRANCE DOORS TO RESIDENTIAL UNITS FROM INTERIOR CORRIDORS ARE REQUIRED TO HAVE A MINIMUM STC RATING OF 26. (LAMINATED 1 ¾" SOLID-CORE DOORS WITH RESILIENT STOPS AND GASKETS OR 18 GAUGE INSULATED STEEL SLAB DOORS WITH COMPRESSED SEALS ALL AROUND, INCLUDING THRESHOLDS WILL MEET THIS REQUIREMENT). (1208A.2)

1. ALL CONSTRUCTION SHALL CONFORM TO THE FOLLOWING:

   A. THESE GENERAL NOTES AND PROJECT SPECIFICATIONS AND DRAWINGS.

   B. CURRENT BSAC 2001 REQUIREMENTS, CALIFORNIA BUILDING CODE 2001 EDITION AND CURRENT EDITIONS OF NATIONAL, STATE AND LOCAL CODES AND OTHER REGULATING AGENCIES WHICH HAVE AUTHORITY OVER ANY PORTION OF THE WORK. ALL CONTRACTORS AND SUBCONTRACTORS PERFORMING GENERAL CONSTRUCTION, MECHANICAL, ELECTRICAL, PLUMBING OR RELATED WORK SHALL COMPLY WITH APPLICABLE SECTIONS OF THE CODES HAVING JURISDICTION. REFER TO APPLICABLE CODES, SHEET A-000

2. THE INTENT OF THE DRAWINGS AND SPECIFICATIONS IS THE CONSTRUCTION OF NEW BUILDINGS IN ACCORDANCE WITH TITLE 24, CALIFORNIA CODE OF REGULATIONS. SHOULD ANY CONFLICT ARISE WHICH IS NOT COVERED BY THE CONTRACT DOCUMENTS, A CHANGE ORDER DETAILING AND SPECIFYING THE REQUIRED WORK SHALL BE SUBMITTED TO AND APPROVED BY THE DEPARTMENT OF BUILDING AND SAFETY BEFORE PROCEEDING WITH THE WORK.
3. DIMENSIONS:
   A. ALL DIMENSIONS SHALL BE VERIFIED IN THE FIELD.
   B. DIMENSIONS AND ELEVATIONS ARE TO TOP OR FACE OF CONCRETE MASONRY OR OTHER HARD SURFACE MATERIAL (NOT TO TOP OF FLOOR COVERING OR ROOFING) UNLESS OTHERWISE NOTED.
   C. DO NOT SCALE DRAWINGS.
   D. ALL PARTITION DIMENSIONS ARE TO FACE OF STUD OR CENTERLINE OF PARTITION UNLESS NOTED OTHERWISE.
4. WHEN +/_ SIGN IS ADJACENT TO A GIVEN DIMENSION, IT INDICATES THAT THE ACTUAL DIMENSION MIGHT VARY DUE TO EXISTING CONDITIONS. VERIFY BEFORE PROCEEDING WITH THE WORK. DISCREPANCIES BETWEEN THE GIVEN DIMENSIONS AND ACTUAL DIMENSIONS ARE TO BE BROUGHT TO THE ARCHITECT'S ATTENTION FOR THE RESOLUTION BEFORE PROCEEDING WITH THE WORK.
5. CONTRACTOR TO VERIFY ALL EXISTING CONDITIONS AND DIMENSIONS AT THE JOB BEFORE PROCEEDING WITH THE WORK.
6. THE CONTRACTOR SHALL CAREFULLY STUDY AND COMPARE THE CONTRACT DOCUMENTS PRIOR TO CONSTRUCTION, AND SHALL AT ONCE REPORT TO THE ARCHITECT ANY ERROR, INCONSISTENCY, OR OMISSION THE CONTRACTOR MAY DISCOVER. IF THE CONTRACTOR PERFORMS ANY WORK KNOWING IT TO BE CONTRARY TO APPLICABLE LAWS, ORDINANCES, RULES & REGULATIONS WITHOUT PRIOR NOTICE TO THE ARCHITECT, THE CONTRACTOR SHALL ASSUME FULL RESPONSIBILITY, AND SHALL BEAR ALL COSTS ATTRIBUTABLE THERETO.
7. NO DEVIATION FROM CONTRACT DOCUMENTS OR SPECIFICATIONS SHALL BE MADE WITHOUT WRITTEN APPROVAL FROM THE ARCHITECT.
8. WHERE NO CONSTRUCTION DETAILS ARE SHOWN OR NOTED FOR ANY PART OF WORK, SUCH DETAILS SHALL BE SIMILAR TO THOSE SHOWN FOR OTHER SIMILAR CONDITIONS AND SHALL BE USED SUBJECT TO REVIEW BY THE ARCHITECT.
9. REFERENCE TO ANY DETAIL OR DRAWING IS FOR CONVENIENCE ONLY AND DOES NOT LIMIT THE APPLICATION OF SUCH DRAWING OR DETAIL.
10. LARGER SCALE DETAIL DRAWINGS TAKE PRECEDENCE OVER SMALLER SCALE DRAWINGS.
11. CONTRACTOR SHALL COORDINATE WITH ALL EQUIPMENT MANUFACTURERS FOR EQUIPMENT ROUGH-IN REQUIREMENTS.
12. PROVIDE ACCESS PANELS TO ALL CONCEALED SPACES (I.E. ATTICS, VOID SPACES, ETC.) AS REQUIRED BY THE BUILDING CODE AND LOCAL GOVERNING AUTHORITIES AND AS NEEDED TO SERVICE ANY ITEMS SPECIFIED BY THESE DOCUMENTS.
13. INSTALL ALL CABINETS, EQUIPMENT, AND FIXTURES UNDER THIS CONTRACT IN ACCORDANCE WITH TITLE 24, PART 2 TABLE NO. 16A-B AND TABLE NO. 16A-D.
14. ALL OPENINGS AT WINDOWS, OPENINGS FOR UTILITY PIPING AND WIRING. ETC. WITHIN THE AREA OF WORK SHALL BE CAULKED AND SEALED.
15. NEITHER THE OWNER NOR THE ARCHITECT SHALL ENFORCE SAFETY MEASURES OR REGULATIONS. CONTRACTOR SHALL DESIGN, CONSTRUCT AND MAINTAIN ALL SAFETY DEVICES DURING SHORING AND BRACING, AND SHALL BE SOLELY RESPONSIBLE FOR CONFORMING TO ALL LOCAL, STATE AND FEDERAL SAFETY AND HEALTH REGULATIONS, STANDARDS AND LAWS.
16. THE ARCHITECT ASSUMES NO RESPONSIBILITY RELATING TO ANY HAZARDOUS OR TOXIC MATERIALS, INCLUDING ASBESTOS, AND ASSUMES NO RESPONSIBILITY FOR ITS EXISTENCE OR REMOVAL. THE OWNER SHALL TAKE ACTION FOR DIRECTLY CONTRACTING WITH A CONSULTANT OR SPECIALIST FOR SUCH, LICENSED BY THE STATE OF CALIFORNIA, SHOULD THOSE SERVICES BE REQUIRED ON THE PROJECT.
17. NO PRODUCTS CONTAINING ASBESTOS IN ANY FORM SHALL BE USED ON ANY PART OF THE WORK.
18. TRENCHES OR EXCAVATIONS 5'-0" OR MORE IN DEPTH INTO WHICH A PERSON IS REQUIRED TO DESCEND SHALL NOT BE ALLOWED WITHOUT FIRST OBTAINING THE NECESSARY PERMIT FROM THE STATE OF CALIFORNIA, DIVISION OF INDUSTRIAL SAFETY, PRIOR TO ISSUANCE OF A BUILDING OR GRADING PERMIT.
19. PROVIDE AND MAINTAIN TEMPORARY BARRICADES, CLOSURE WALLS, ETC., AS REQUIRED TO PROTECT THE PUBLIC DURING THE PERIOD OF CONSTRUCTION. CONSTRUCTION BARRICADES TO BE EQUAL TO RATING OF THE WALL THEY REPLACE.
20. SUPPLY TEMPORARY ELECTRICAL POWER TO THE JOB SITE FOR USE BY ALL CONSTRUCTION TRADES PRIOR TO THE HOOKUP OF THE SPECIFIED ELECTRICAL WORK.
21. THE USE OF THE WORD "PROVIDE" IN CONNECTION WITH ANY ITEM SPECIFIED IS INTENDED TO MEAN THAT SUCH SHALL BE FURNISHED, INSTALLED AND CONNECTED, WHERE SO REQUIRED, EXCEPT AS NOTED OTHERWISE.
22. PROVIDE ALL PERTINENT SHOP DRAWINGS FOR APPROVAL, IN REPRODUCIBLE FORM IN ADVANCE OF FABRICATION AND INSTALLATION ALLOWING SUFFICIENT TIME FOR REVIEW AND CORRECTIVE ACTIONS SHOULD IT BE REQUIRED. SUBMIT CUTS OF ALL FIXTURES, EQUIPMENT AND SAMPLES OF ALL FINISHED SPECIFIED FOR APPROVAL PRIOR TO FABRICATION AND INSTALLATION.
23. PRIOR TO SUBMITTAL OF BID, NOTIFY ARCHITECT IN WRITING, WHICH (IF ANY) SPECIFIED MATERIALS OR EQUIPMENT ARE EITHER UNAVAILABLE OR WILL CAUSE A DELAY IN THE CONSTRUCTION COMPLETION SCHEDULE.
24. COORDINATE AND VERIFY WITH THE MECHANICAL, PLUMBING, AND ELECTRICAL TRADES, THE SIZE AND LOCATION OF PIPING, DUCTWORK, TRENCHES, SLEEVES, SPECIAL BOLTING FOR EQUIPMENT CONDUIT ETC., THROUGH AND UNDER CONCRETE SLABS.
25. ARCHITECT IS NOT RESPONSIBLE FOR THE ACCURACY OF INFORMATION CONTAINED IN OWNER SUPPLIED DOCUMENTS.
26. THE WORK SHALL BE DONE IN ACCORDANCE WITH APPLICABLE LAWS, LOCAL ORDINANCES, PERMITS AND THE CONTRACT DOCUMENTS. MAINTAIN THE JOB SITE IN A CLEAN, ORDERLY CONDITION FREE OF DEBRIS AND LITTER ON A REGULAR BASIS. REMOVE ALL TRASH AND DEBRIS AS A RESULT OF THE OPERATION DURING AND IMMEDIATELY UPON COMPLETION OF EACH PHASE OF WORK.
27. ALL MATERIAL STORED ON THE SITE SHALL BE PROPERLY STACKED AND PROTECTED TO PREVENT DAMAGE AND DETERIORATION UNTIL USE. FAILURE TO PROTECT MATERIALS MAY BE CAUSE FOR REJECTION OF WORK.
28. PREPARE ALL FLOORS TO RECEIVE NEW FLOOR FINISHES INDICATED. VOIDS SHALL BE FILLED AND ANY SURFACE IRREGULARITIES LEVELED. ALL FLOOR SURFACES ARE TO BE LEVEL CLEAN AND IN SMOOTH CONDITION, MEETING MANUFACTURER'S SPECIFICATIONS, PRIOR TO INSTALLATION OF ANY FLOOR COVERINGS.
29. ALL FLOORS SHALL BE OF SLIP RESISTANT FINISH SURFACE. STATIC COEFFICIENT OF FRICTION SHALL BE 0.6 FOR WALKING SURFACES AND 0.8 FOR RAMPS. FLOORING SHALL BE LABELED WITH STATIC COEFFICIENT OF FRICTION.
30. IF CARPET OR CARPET TILE IS USED ON A FLOOR SURFACE, THEN IT SHALL BE SECURELY ATTACHED; HAVE NO PAD; AND HAVE A LEVEL LOOP, TEXTURED LOOP, LEVEL CUT/UNCUT PILE TEXTURE. THE MAXIMUM PILE THICKNESS SHALL BE 1/2 INCHES. EXPOSED EDGES OF CARPET SHALL BE FASTENED TO FLOOR SURFACES AND HAVE REDUCERS ALONG THE ENTIRE LENGTH OF THE EXPOSED EDGE. CARPET REDUCERS SHALL NOT EXCEED 1/2 INCH CHANGE IN LEVEL AND SHALL BE BEVELED WITH A SLOPE NO GREATER THAN 1:2.
31. MAXIMUM 1/2" RISE BETWEEN TOP OF THRESHOLD AND ADJACENT FINISHED FLOOR. CHANGE IN LEVEL BETWEEN 1/4" AND 1/2" SHALL BE BEVELED WITH A SLOPE NO GREATER THAN 1:2.
32. PROVIDE SUSPENDED CEILINGS, FURRED-OUT SURFACES WHERE REQUIRED TO CONCEAL PIPING, DUCT, ETC. IN FINISHED ROOMS. SHOULD CONDITIONS' NECESSITATE ALTERATIONS IN INDICATED CEILING HEIGHTS DUE TO STRUCTURAL OR MECHANICAL REQUIREMENTS, OBTAIN APPROVAL FROM ARCHITECT BEFORE INSTALLING FURRING. THERE SHALL BE NO EXPOSED PIPE, CONDUITS, DUCTS, VENTS, ETC. IN DESIGNATED FINISH SPACES UNLESS NOTED TO BE EXPOSED CONSTRUCTION ON THE FINISH SCHEDULE.
33. UNLESS OTHERWISE INDICATED, CLOSETS, VESTIBULES, COLUMNS, PARTITIONED-OFF PORTIONS, PROJECTIONS OR RECESSES IN SCHEDULED SPACES SHALL HAVE FINISHES AS SCHEDULED FOR RESPECTIVE SPACES IN WHICH THEY OCCUR.
34. PROVIDE ALL NECESSARY BLOCKING, BACKING AND FRAMING FOR LIGHT FIXTURES, ELECTRICAL UNITS, A.C. EQUIPMENT AND ALL OTHER ITEMS REQUIRING SAME.
35. THE STRUCTURAL, MECHANICAL, ELECTRICAL AND PLUMBING DRAWINGS ARE SUPPLEMENTARY TO THE ARCHITECTURAL DRAWINGS. SHOULD THERE BE A DISCREPANCY BETWEEN THE ARCHITECTURAL DRAWINGS AND THE CONSULTING ENGINEERS' DRAWINGS, SUCH A DISCREPANCY IS TO BE BROUGHT TO THE ATTENTION OF THE ARCHITECT PRIOR TO INSTALLATION OF SAID WORK. ANY WORK INSTALLED IN CONFLICT WITH THE ARCHITECTURAL DRAWINGS SHALL BE CORRECTED BY THE CONTRACTOR AT HIS OWN EXPENSE.
36. NOTWITHSTANDING ANY OMISSIONS, IT SHALL BE THE SOLE DUTY AND RESPONSIBILITY OF THE GENERAL CONTRACTOR TO DETERMINE ACTUAL CONSTRUCTION DETAILS AND FABRICATE AND INSTALL SAID DESIGN IN ACCORDANCE WITH ACCEPTED GOOD PRACTICE AND PROCEDURE AND TO LET THE ARCHITECT KNOW AT THE TIME OF BIDDING IF SAID DRAWINGS AND DETAILS ARE NOT PRACTICAL OR STRUCTURALLY SOUND IN THEIR INTENT AND PURPOSE.
37. IS THE RESPONSIBILITY OF THE GENERAL CONTRACTOR TO COORDINATE ALL WORK WITH THE SUBCONTRACTORS. IF A PORTION OF WORK FOR A SPECIFIC TRADE APPEARS IN A SECTION OF THESE DOCUMENTS OTHER THAN THAT WHICH IS SPECIFIC TO THAT TRADE, IT IS THE GENERAL CONTRACTOR'S RESPONSIBILITY TO NOTIFY SAID TRADE OF SUCH WORK.
38. ELECTRICAL AND COMMUNICATIONS SYSTEM RECEPTACLES ON WALLS SHALL BE MOUNTED NO LESS THAN 15 INCHES ABOVE THE FLOOR. THESE REQUIREMENTS DO NOT APPLY WHERE ELECTRICAL AND COMMUNICATIONS SYSTEMS' RECEPTACLES ARE NOT NORMALLY INTENDED FOR USE BY BUILDING OCCUPANTS.
39. VERIFY ALL THERMOSTAT AND ELECTRICAL PANEL LOCATIONS WITH ARCHITECT PRIOR TO INSTALLATION.
40. MECHANICAL UNITS SHALL BE ANCHORED AGAINST SEISMIC FORCES PER C.B.C. CHAPTER 16.
41. OUTLETS AND TELEPHONES BACK TO BACK IN A WALL SHALL BE SEPARATED BY ONE STUD SPACE, MINIMUM.
42. SUPPORT AND BRACE ALL PIPES, DUCTS AND CONDUITS PER THE SMACNA "GUIDELINES FOR SEISMIC RESTRAINTS OF MECHANICAL SYSTE

LA DBS — LA RBS

CITY OF LOS ANGELES

Title 24, California Code of Regulations
Accessibility Regulations Correction List for Public Accommodations and Commercial Facilities
(Effective 11-01-2002)

The State of California delegates to the City/County the authority to ensure compliance with Title 24, Part 2 of the California Code of Regulations. This correction list indicates sections of Title 24, Part 2 which are applicable to your project. Please be aware that the owner(s) of this building and his/her consultants are responsible for compliance with Federal Regulations contained in the Americans with Disabilities Act (ADA). Where the ADA requirements exceed those contained in Title 24, Part 2, it is the owner's responsibility to ensure compliance with the ADA, as the City/County is not delegated the authority to plan review or inspect projects for ADA compliance.

PLAN CHECK NO. _____ PLAN CHECK EXPIRATION DATE _____

JOB ADDRESS _____

OCCUPANCY GROUP _____ TYPE OF CONSTRUCTION _____ NO. OF STORIES _____

APPLICANT _____ TELEPHONE _____

E-MAIL _____

ADDRESS _____

REVIEWED BY _____ DATE _____ TELEPHONE _____

RECHECKED BY _____ DATE _____ TELEPHONE _____

INSTRUCTIONS

- Corrections with circled item numbers apply to this plan check.
- In the left hand margin of the circled corrections, please indicate the sheet number and detail or note number on the plans where the corrections are made. Resubmit marked original plans and two corrected sets of plans and this plan review list.
- Items in ***Bold and Italic*** reflect changes effective November 1, 2002.
- Incomplete or unreadable drawings will not be accepted.
- The plan check engineer will be available for conference and telephone calls between the hours of _____ and _____ on the following days: _____. **Appointments are recommended.**

Publicly funded buildings, structures, sidewalks, curbs and related facilities shall be accessible to people with disabilities as follows:
*Sec. **101.17.11** Part 1, Title 24, CCR (aka California Building Code).*

1. *All buildings, structures, sidewalks, curbs and related facilities constructed **in the State** by the use of State, County or municipal funds, or the funds of any political subdivision of the State.*
2. *All buildings, structures, and facilities, which are leased, rented, contracted, sublet or hired for periods in excess of two years by any municipal county, or State division of government, or by a special district.*
3. *All publicly funded living accommodations.*
4. *All publicly funded buildings used for congregate residences or for one or two family dwelling unit purposes shall conform to the provisions applicable to living accommodations.*
5. *All existing publicly funded buildings and facilities when alterations, structural repairs or additions are made to such buildings or facilities. For detailed requirements on existing buildings, see Chapter 11B, Division IV, Section 1134B.*

*All privately funded public accommodations as defined, and commercial facilities, as defined, shall be accessible to people with physical disabilities as follows: Section **101.17.11**, Part 2, Title 24, CCR (aka California Building Code).*

Exception: Certain types of privately funded multi-story buildings do not require installation of an elevator to provide access above and below the first floor:

i. Stairs used solely for emergency egress. See 1103B.1 Exception 1

ii Floors or portions of floors not customarily occupied, including, but not limited to, elevator pits, piping and equipment catwalks and machinery rooms. See 1103B.1, Exception 2.

iii The following types of privately funded multi-story buildings do not require a ramp or elevator above and below the first floor: See 1103B.1, Exception 3.

A. Multi-storied office buildings (other than the professional office of a health care provider) and passenger vehicle service stations less than three stories high, or less than 3,000 square feet per story.

B. Any other privately funded multi-storied building that is not a shopping center, shopping mall or professional office of a health care provider, and that is less than three stories high or less than 3,000 square feet per story if a reasonable portion of all facilities and accommodation normally sought and used by the public in such a building are accessible to and usable by persons with disabilities.

1. *Any building, structure, facility, complex or improved area or portions thereof which is used by the general public.*
2. *Any sanitary facilities which are made available for public, clients or employees in such accommodations or facilities.*
3. *Any curb or sidewalk intended for public use that is constructed in this State with private funds.*
4. *All existing privately funded public accommodations when alterations, structural repairs or additions are made to such public accommodation as set forth under Section 1134B.*

All Public Housing and Private Housing available for Public use. Government Code Sections 4450 and 12955.1(d)

- *References to section numbers are to Part 2, Title 24, CCR (aka California Building Code). Prefix "3-" is for Part 3, Title 24, CCR (aka California Electrical Code) and "5-" is for Part 5, Title 24, CCR (aka California Plumbing Code). NFPA refers to National Fire Protection Association.*
- *Item numbers circled below are required for this project.*
- *Exemptions claimed for any item shall be requested in writing and shall include all data needed to determine "unreasonable hardship" as described in **Section 222.***

The following attached Supplemental Accessibility Regulations correction list(s) is(are) a part of these corrections:

- **Supplemental Correction List No. 1** (Sanitary Facilities, Drinking Fountains, Telephones, *Alterations* and Wheelchair Lifts)
- **Supplemental Correction List No. 2** (Group "A" Occupancies– *Assembly Halls, Dining & Drinking, Etc.–*, Group "E" Occupancies– *Educational Facilities–*, Group "H" Occupancies– *Hazardous Facilities–*, Group "I" Occupancies– *Medical Facilities–*, and Outdoor Occupancies– *Recreational Facilities*)
- **Supplemental Correction List No. 3** (Group "B" Occupancies– *Office Buildings, Police & Fire Dept. and Courtrooms, Etc.–*, Group "M" Occupancies - Sales Facilities –Factories, Warehouses and ATM's)
- **Supplemental Correction List No. 4** (Group "R" Occupancies– *Hotels, Motels, Transient Lodging, Etc.–*, and Bathing Facilities & Lockers)
- **Supplemental Correction List No. 5** (Elevators, Egress and Areas for Evacuation Assistance)
- ☐ ***Correction List No.6 (Group "R" Occupancies- Multi Family Dwellings, Apartments, Condominiums, Licensed care facilities)***

SITE DEVELOPMENT & ACCESSIBLE ROUTE OF TRAVEL

NOTE: Accessible Route of Travel is defined as "a continuous unobstructed path connecting all accessible elements and spaces in an accessible building or facility that can be negotiated by a person with a severe disability using a wheelchair and that is also safe for and usable by persons with other disabilities". (1102B)

1. Site development and grading shall be designed to provide access to all entrances and exterior ground floor exits, and access to normal paths of travel, and where necessary to provide access, shall incorporate pedestrian ramps, curb ramps, etc. (1127B.1)
2. At least one accessible route within the boundary of the site shall be provided from public transportation stops, accessible parking and accessible passenger loading zones, and public streets or sidewalks, to the accessible building entrance they serve. The accessible route shall be the maximum extent feasible, coincide with the route for the general public. (1114B.1.2)
3. The accessible route of travel shall be the most practical direct route between accessible building entrances, accessible parking facilities, and the accessible entrance to the site. (1127B.1)
4. When more than one building or facility is located on a site, accessible routes of travel shall be provided between buildings and accessible site facilities. (1127B.1)
5. When a building or portion of a building is required to be accessible an accessible route of travel to the site shall be provided to all portions of the building, to accessible building entrances, and between the building and the public way. (1114B.1.2)
6. At least one accessible route shall connect the following: (1114B.1.2)
   a. Accessible buildings, facilities, elements and spaces that are on the same site.
   b. Accessible pick up facility entrances with all accessible spaces and elements and with all accessible dwelling units within the building or facility.
7. Where more than one route of travel is provided, all routes shall be accessible. (1114B.1.2)

ACCESSIBLE PARKING

NOTE: Each lot or parking structure where parking is provided for the public as clients, guests or employees, shall provide accessible parking as required by Section 1129B. (1129B.1)

1. Provide _____ disabled parking spaces as required by Table 11B-7 (see next column) for _____ parking lot/structure. (1129B.1)
2. At facilities providing medical care and other services for persons with mobility impairments, parking spaces complying with Section 1129B shall be provided in accordance with Table 11B-7 except as follows: (1129B.3)
   a. Outpatient units and facilities: 10% of the total number of parking spaces provided serving each such outpatient unit or facility. (1129B.3.1)
   b. Units and facilities that specialize in treatment or services for persons with mobility impairments: 20% of the total number of parking spaces provided serving each such unit or facility. (1129B.3.2)
3. Accessible parking spaces serving a particular building shall be located on the lowest level with direct access to an entrance from adjacent parking to an accessible entrance (as near as practical to an accessible entrance). (1129B.1)

12. Surface slopes of accessible parking spaces shall be the minimum possible and shall not exceed 1 unit vertical to 50 units horizontal. (1129B.4.4)
13. All entrances to and exits from a building and vertical clearance within parking structures shall have a minimum vertical clearance of 8'-2" to any beam, ceiling, pipe etc., where required for accessibility to accessible parking spaces. (1130B)
14. In each parking area, a bumper or curb shall be provided and located to prevent encroachment of cars over the required width of walkways. (1129B.4.3, Fig 11B-18A, B & C)
15. Pedestrian ways which are accessible to people with disabilities shall be provided from each accessible parking space to related facilities, including curb cuts or ramps as needed. (1129B.4.3, Fig 11B-18A, B & C)
16. Curb ramps shall not encroach into any parking space, with the exception of the flared sides of the curb ramp, adjacent to an adjacent wall/sidewalk. The transition ramp shall be a minimum of at least 3' in a measured 20" in length, with a maximum slope of 1:12 and with flared side slopes of 1 vertical to 10 horizontal. (1129B.4.3, Fig 11B-18A, B & C)
17. Each parking space reserved for persons with disabilities shall be identified by a reflectorized sign permanently posted immediately adjacent to and visible from each stall or space, consisting of a profile view of a wheelchair with occupant in white on dark blue background. The sign shall not be smaller than 70 square inches in area and, when in a path of travel, shall be posted at a minimum height of 80" from the bottom of the sign to the parking space finished grade. (1129B.5, Fig 11B-18A, B & C)
18. Signs to identify accessible parking spaces may also be centered on a wall at the interior end of the parking space at a minimum height of 36" from the parking space finished grade, ground or pavement. (1129B.5)
19. Van accessible parking spaces shall have an additional sign stating "Van Accessible" mounted below the symbol of accessibility. (1129B.5)
20. An additional sign shall also be posted, in a conspicuous place, at each entrance to off-street parking facilities, or immediately adjacent to and visible from each stall or space. The sign shall be not less than 17" by 22" in size with lettering not less than 1" in height, which clearly and conspicuously states the following: (1129B.5)

    "Unauthorized vehicles parked in designated accessible spaces not displaying distinguishing placards or license plates issued for persons with disabilities may be towed away at owner's expense. Towed vehicles may be reclaimed at _____ or by telephoning _____"

    NOTE: Blank spaces are to be filled in with appropriate information as a permanent part of the sign.
21. The surface of each accessible parking space or stall shall have a surface identification duplicating either of the following schemes: (1129B.5, Fig 11B-18A, B & C)
    a. By outlining or painting the stall or space in blue and outlining on the ground in blue. Sufficient space in white or suitable contrasting color a profile view depicting a wheelchair with occupant:

    OR

    b. By outlining a profile view of a wheelchair with occupant in white on blue background. The profile view shall be located so that it is visible to a traffic enforcement officer when a vehicle is properly parked in the space and shall be 30" high by 36" wide.

22. In parking facilities that do not serve a particular building, accessible parking shall be located on the shortest accessible route of travel to an accessible pedestrian entrance of the parking facility. (1129B.1)

TABLE 11B-7

Total # of parking spaces provided	Total # of disabled spaces required
1-25	1
26-50	2
51-75	3
76-100	4
101-150	5
151-200	6
201-300	7
301-400	8
401-500	9
501-1000	2% of total
1001 & over	20 plus 1 for each 100 or fraction thereof > 1001

23. In buildings with multiple accessible entrances with adjacent parking, accessible parking spaces shall be dispersed and located closest to the accessible entrances. (1129B.1)
24. Where single accessible parking spaces are provided, they shall be 14' wide and outlined to provide a 9' parking area and a 5' loading and unloading access aisle on the passenger side of the vehicle. *The word "NO PARKING" shall be painted on the ground within each five-foot loading and unloading access aisles. This notice shall be painted in white letters not less than 12 inches high and located so that it is visible to traffic enforcement officials.* (1129B.4.1, Fig 11B-18A & C)
25. One in every eight accessible spaces, but not less than one, shall be served by an access aisle 96" wide minimum *placed on the side opposite the driver's side when the vehicle is going forward into the parking space* and shall be designated "van accessible". All such spaces may be grouped on one level of a parking structure. *(Fig. 11B-18B,* 1129B.4.2)
26. When less than 5 parking spaces are provided at buildings and facilities subject to these regulations, one shall be 14' wide and lined to provide a 9' parking area and a 5' loading and unloading area. However, this shall not be required that the space be reserved exclusively or identified for use by persons with disabilities only. (1129B.2)
10. The minimum length of an accessible parking space shall be 18'. (1129B.4.1, Fig 11B-18A, B & C)
11. Accessible parking spaces shall be so located that persons with disabilities are not required to wheel behind cars other than their own. *Ramp shall not encroach into any accessible parking space or the adjacent access aisle. The maximum cross slope in any direction for both parking space and access aisle shall not exceed 2* % slope.

PASSENGER DROP-OFF & LOADING ZONES

NOTE: When provided, passenger drop-off and loading zones shall be located on an accessible route of travel. (1131B.1)

1. Where provided, one passenger drop-off and loading zone shall provide an access aisle at least 60" wide and 20' long adjacent and parallel to the vehicle pull-up space. Such zones shall be located on a surface with a slope not exceeding 1 vertical in 50 horizontal. If there are curbs between the access aisle and the vehicle pull-up space, then a curb ramp shall be provided. (1131B.2.1., Fig 11B-24)
2. If there are no curbs, the boundary between the access aisle and the vehicular pull-up space shall be defined by a continuous, detectable warning which is 36" wide. (1133B.8.4)
3. Provide minimum vertical clearance of 9'-6" at accessible passenger loading zones and all vehicular routes from access route to such areas from site entrances and exits. (1131B.2.2)
4. Valet parking facilities shall provide a passenger loading zone and shall be located on an accessible route to the entrance of the facility. The parking space requirements of Section 11259 apply to facilities with valet parking. *(Fig. 11B-18, Fig. 11B-19)*
5. Where provided, bus stop pads *shall be* 96" long (measured parallel to curb or road edge) and 60" wide (measured perpendicular to curb or road) to be a minimum 8" above adjacent roadway or site constraints. Bus stop pads shall connect to an accessible route. Newly constructed bus stop pads must provide a square curb surface between the pad and the road or *other detectable warning approved by Department of State Architect in accordance with Section 1133B.8.5.* Bus stop pads shall be at the same slope as the roadway in the direction parallel to the roadway and a maximum 2% slope perpendicular to the roadway. (1131B.4)
6. Where provided, provide bus stop shelters installed so as to permit a wheelchair user to enter the shelter and access a clear floor area of 30" by 48" minimum within the shelter. Bus stop shelters shall connect to an accessible route and to bus stop pads. (1131B.4)

WALKS & SIDEWALKS

1. Walks and sidewalks shall have a continuous common surface, not interrupted by steps or by abrupt changes in level exceeding ½". (1133B.7.1)
2. Walks and sidewalks shall be 48" minimum in width. (1133B.7.1, Fig 11B-27(A))
3. When changes in level not exceeding 1/2" occur, they shall be beveled with a slope no greater than 1:2, except that this changes not exceeding ¼" may be vertical. (1133B.7.4, Fig 11B-9E(c) & (d))
4. Abrupt changes in level along any accessible route exceeding 1/2" shall comply with the requirements for curb ramps. (1133B.7.4)
5. Walk and sidewalk surfaces shall be slip-resistant as follows: (1133B.7.1)
   a. Surfaces with a slope of less than 5% gradient shall be at least a slip - resistant as that described as a medium swirled finish. (1133B.7.1.1)
   b. Surfaces with a slope of 5% or greater gradient shall be slip-resistant. (1133B.7.1.2)
6. When the slope in the direction of travel of any walk exceeds 1 vertical to 20 horizontal, it shall comply with the provisions of Section 1133B.3 as a pedestrian ramp. (1133B.5)
7. Walk and sidewalk surface cross slopes shall not exceed 1/4" per foot. (1133B.7.1.3)

14. At bottom and intermediate landings, the width shall be at least the same as required for the ramp.(1133B.5.4.5, Fig 11B-38 & 39)
15. Intermediate landing at a change of direction in excess of 30 degrees and bottom landings shall have a dimension in the direction of ramp run of not less than 72" to accommodate the handrail extension. (1133B.5.4.6, Fig 11B-38)
16. Other intermediate landings shall have a dimension in the direction of ramp run of not less than 60". (1133B.5.4.7, Fig 11B-36)
17. Handrails are required on ramps that provide access if the ramp slope exceeds 1" rise in 20" of horizontal run, except that at exterior door landings, handrails are not required on ramps less than 6" rise or 72" in length. (1133B.5.5.1)
18. Handrails shall be placed on each side of each ramp, shall be continuous the full length of the ramp, shall be 34" to 38" above the ramp surface, shall extend a minimum of 1' beyond the top and bottom of the ramp, and the ends shall be returned. (1133B.5.5.1, Fig 11B-27(D) & (d))
19. The grip portion of handrails shall be not less than 1-1/4" nor more than 1-1/2" nominal diameter, or the shape shall provide an equivalent gripping surface, and all surfaces shall be smooth with no sharp corners. Handrails shall not rotate within their fittings. (1133B.5.5.1. Fig 11B-36)
20. Handrail projecting from a wall shall have a space of 1-1/2" between the wall and the handrail. (1133B.5.5.1, Fig 11B-36)
21. Handrails may be located in a recess if the recess is a maximum of 3" deep and extends at least 18" above the top of the rail. (1133B.5.5.1, Fig 11B-36)
22. Any wall or other surface adjacent to handrails shall be free of sharp or abrasive elements. Edges shall have a minimum radius of 1/8". (1133B.5.5.1, Fig 11B-36)
23. Where the ramp surface is not bounded by a wall or fence and the ramp exceeds 10" in length, the ramp shall comply with one of the following requirements. (1133B.5.6, Fig 11B-27(A & B))
   a. A guide curb a minimum of 2" in height shall be provided at each side of the ramp. (1133B.5.6.1)

   OR

   b. A wheel guide rail shall be provided, centered 3"± 1" above the surface of the ramp. (1133B.5.6.2)
24. *Where the extension of the handrail in the direction of the ramp run would create a hazard, the termination of the extension shall be made either rounded or returned smoothly to the floor, wall or post or the extension on the handrail may be turned 90 degrees to the run of the ramp.* (1133B.5.6.1 *(1133B.4.2.4)*
25. *Ramps more than 20" above the adjacent ground shall be provided with guardrails as required by section 1133B.5.7 and 1603.3.4.6. Such guardrail shall be continuous from the top of the ramp to the bottom of the ramp. (1133B.5.7)*

ENTRANCES & EXITS

NOTE: Exit as defined is "a continuous and unobstructed means of egress to a public way and shall include intervening aisles, doors, doorways, gates, corridors, exterior exit balconies, ramps, stairways, smokeproof enclosures, horizontal exits, exit passageways, exit courts, and yards".

NOTE: Public Way as defined is "any street, alley or similar parcel of land essentially unobstructed from the ground to the sky which is deeded, dedicated, or otherwise permanently appropriated to the public for public use and having a clear width of not less than 10 feet. (1002)

NOTE: For the purposes of Title 24, the use of the term Exit Door in Section 1003.3.1 applies to all doors that provide access, that is, entrances, passage doors, etc.

1. All entrances and all exterior ground floor exit doors to buildings and facilities shall be made accessible to persons with disabilities. (1133B.1.1.1)
2. Elevators or escalators shall not be used as a required exit. (1003.2)
3. Revolving doors shall not be used as a required entrance for persons with disabilities. (1003.1.1.2)
4. During periods of partial or restricted use of a building or facility, the entrances used for primary access shall be accessible to and usable by persons with disabilities. (1133B.1.1.1.3)
5. Recessed doormats shall be aesthetically anchored to prevent interference with wheelchair traffic. (1133B.1.1.2, Fig 11B-3D)
6. All gates, including ticket gates, shall meet all applicable accessibility specifications of doors. (1133B.1.1.1.4)
7. Every required exit doorway which is located within an accessible path of travel shall be *capable of opening at least 90 degrees, shall have a minimum clear opening of 32"*, and shall be of a size as to permit the installation of a door not less than 3' in width and not less than 6'-8" in height. (1133B.1.1.1.1, 1133B2.2)
8. The space between two consecutive door openings in a vestibule, serving other than a required exit stairway, shall provide a minimum of 48" of clear space from any door opening into such vestibule when the door is positioned at an angle of 90 degrees from its closed position. Doors in a series shall swing either in the same direction or away from the space between the doors. See Figures 11B-30 & 31 for strike edge clearance.(1133B.2.4.4)
9. In existing stairways where there is no landing, doors shall be conspicuously identified with a sign stating "Danger Stairway–No Landing" or equivalent wording and there shall be adequate illumination. (1004.3.2.1.a(5))

DOORS

1. Manually operated edge- or surface-mounted flush bolts and surface bolts are prohibited. When exit doors are used in pairs and approved automatic flush bolts are used, the door *leaf having* the automatic flush bolts shall have no door knob or surface-mounted hardware. The unlatching of any leaf shall not require more than one operation. (1003.3.1.7)
2. Latching and locking doors that are hand activated and which are in a path of travel shall be operable with a single effort by lever type handware, by panic bars, push-pull activating bars, or other hardware designed to provide passage without requiring the ability to grasp the opening hardware. (1133B.2.5.1)
3. Doors to individual hotel or motel units shall operate similarly, to above, except where the door is not used customarily operated by persons from corridor or exterior side of unit door, large bow keys 2" (full bow) or 1-1/4" (half bow) shall be provided in lieu of lever type hardware on the corridor side. Separate deadlock activation on room side of corridor doors in hotels or motels shall have lever handle or large thumb turn in an easily reached location. (1133B.2.5.1)
4. Hand-activated door opening hardware shall be centered between 30" and 44" above the floor. (1133B.2.5.1)
5. When installed, exit doors shall be capable of opening so that the clear width of the exit is not less than 32". (1133B.1.1.1.1, Fig 11B-5D & 11B-33)

6. *For hinged doors*, the opening width shall be measured with the door positioned at an angle of 90 degrees from its closed position. (1133B.2.3, Fig 11B-33(a))
7. Where a pair of doors is utilized, at least one of the doors shall provide a clear, unobstructed opening width of 32" with the leaf positioned at an angle of 90 degrees from its closed position. (1133B.2.3.1)
8. When an automatic door operator is utilized to operate a pair of doors, at least one of the doors shall provide a clear, unobstructed opening width of 32" with the door positioned at an angle of 90 degrees from its closed position. (1133B.2.3.2)
9. Minimum maneuvering clearances at doors shall be as shown in Figure 11B-25. The floor or ground area within the required clearances shall be level and clear. (1133B.2.4.2)
10. There shall be a level and clear floor or landing on each side of a door. The level area shall have a length in the direction of door swing of at least 60" and the landing in the direction of door swing of 48" as measured at right angles to the plane of the door in the closed position. *Where doors are in the path of the doorway is offset or located in a recess a distance more than 8 inches measured from the plane of the doorway to the face of the wall, the door shall be provided with 60" maneuvering clearance for front approach.* (1133B.2.4.2, *1133B.2.6.3, Fig 11B-26, Fig 11B-33)*
11. The width of the level area on the side to which the door swings shall extend 24" past the strike edge of the door for exterior doors and 18" past the strike edge for interior doors. *Where the door is recessed or located in an alcove, the projection distance allowed to project into the required door strike clearance measured from the face of the wall to the face of the door is limited to 8".* (1133B.2.4.3, *1133B.2.4.5,* Fig 11B-33(a))
12. Provide clear space of 12" past strike edge of the door on the opposite side to which the door swings if the door is equipped with both a latch and a closer. (1133B.2.4.1)
13. The floor or landing shall be not more than 1/2" lower than the threshold of the doorway. (1133B.2.4.1)
14. Where the door opens into a stair of a smoke proof enclosure, the landing need not have a length of 60". (1133.9.2.3a)
15. The bottom 10" of all doors except automatic and sliding shall have a smooth, uninterrupted surface to allow the door to be opened by a wheelchair footrest without creating a trap or hazardous condition. Where narrow frame doors are used, a 10" high smooth panel shall be installed on the push side of the door, which will allow the door to be opened by a wheelchair footrest without creating a trap or hazardous condition. (1133B.2.6, Fig 11B-29)
16. Maximum effort to operate exterior and interior doors shall not exceed 5 pounds, with pull or push effort being applied at right angles to hinged doors and at the center plane of sliding or folding doors. Compensating devices or automatic door operators may be utilized to meet the above standards. When fire doors are required, the maximum effort to operate the door may be increased to the minimum allowable by the appropriate administrative authority, but to exceed 15 pounds. (1133B.2.5)
17. *When the door has a closer, then the sweep period of the closer shall be adjusted so that from an open position of 70 degrees, the door will take at least 3 seconds to move to a point 3" from the latch, measured to the landing edge of the door.* (1133B.2.5.1)
18. Where turnstiles and crowd control barriers are utilized in a facility for the purpose of providing fully controlled access, such as where an admission price is charged, a door or gate that is accessible to persons with disabilities shall be provided adjacent to or within a distance not to exceed 30' from each turnstile exit or entrance. This alternate passageway shall be maintained in an unlocked condition during business hours and the door or gate shall not activate a publicly audible alarm system. Is posted stating The door or gate may be latched where all gates are restricted and controlled by an attendant and a sign"All gates are restricted and controlled by an attendant." The accessible door or gate shall provide the same use pattern. Where posts, rails, or other pedestrian controls are utilized to create control aisles or lanes, a minimum aisle width not less than indicated in Figure 11B-5E (a) and (b) with 32" of clear opening(1133B.2.3.4).

FLOORS AND LEVELS

NOTE: *Level area is defined as "a specified surface that does not have a slope in any direction exceeding 1/4 inch in one foot from the horizontal (2.083% gradient)."* (1102B)

1. In buildings and facilities, floors of a given story shall be a common level throughout, or shall be connected by pedestrian ramps, passenger elevators, or passenger vehicle access lifts. (1133B.1)
2. Ground and floor surfaces along accessible routes and in accessible rooms and spaces, including floors, walks, ramps, stairs, and curb ramps, shall be stable, firm, and slip-resistant. (1133B.2 & 1124B.1)
3. Changes in level up to ¼ inch may be vertical and without edge treatment. (1124B.2, Fig 11B-5E(c))
4. Changes in level between ¼ inch and ½ inch shall be accomplished by means of a ramp no steeper than 1 vertical to 2 horizontal. (1124B.2, Fig 11B-5E(d))
5. If carpet or carpet tile is used on a ground or floor surface, it shall be securely attached have a firm cushion, pad or backing or no cushion or pad; and have a level loop, textured loop, level cut pile, or level cut/uncut pile texture. The maximum pile height shall be 1/2". Exposed edges of carpet shall be fastened to floor surfaces and have trim along the entire length of the exposed edge. Carpet edge trim shall comply with Section 1124B.2. (1124B.3, Fig 11B-7B)
6. If gratings are located on floors, then they shall have spaces no greater than 1/2" wide in one direction. If gratings have elongated openings, they shall be placed so that the long dimension is perpendicular to the dominant direction of travel. (1124B.4, Fig 11B-7B)

CORRIDORS & AISLES

1. Every corridor serving an occupant load of 10 or more shall not be less than 44" in width. (1133B.3.1)
2. Corridors serving an occupant load of less than 10 shall not be less than 36" in width. (1133B.3.1)
3. Corridors which are located on accessible route shall exceed 200' in length shall:
   a. Have a minimum clear width of 60";
   OR
   b. Have, at reasonable intervals, a 60" by 60 minimum wheelchair turning space or passing alcove; not to exceed 200'
   c. Have, at a central location, an intervening crossing or tee corridor, a minimum of 44" in width
4. Circulation aisles and pedestrian ways shall be sized according to functional requirements and in no case shall be less than 36" in clear width. (1133B.3.0.1)
5. Every portion of every building in which are installed seats, tables, merchandising, equipment, or similar materials shall be provided with aisles leading to an exit. (1133B.6.1)

6. Every aisle shall be not less than 3' wide if serving only one side, and not less than 3'-6" wide if serving both sides. (1133B.6.2)

HAZARDS AND PROTRUDING OBJECTS

1. Abrupt changes in level, except between a walk or sidewalk and an adjacent street or driveway, exceeding 4" in a vertical dimension, such as at planters or fountains located in or adjacent to walks, sidewalks, or other pedestrian ways, shall be identified by warning curbs projecting at least 4" in height above the walk or sidewalk surface to warn the blind of a potential drop off. (1133B.8.1)
2. When a guardrail or handrail is provided, no warning curb is required when a guide rail is provided centered 3" ± 1" above the surface of the walk or sidewalk; the walk is 5 percent or less gradient, or no adjacent hazard exists. (1133B.8.1, Fig 11B-27(c)
3. Objects projecting from walls with their leading edges between 27" and 80" above the finished floor shall protrude no more than 4" into walks, halls, corridors, passageways, or aisles. (1121B.1, Fig 11B-7A)
4. Objects mounted with their leading edges at or below 27" above the finished floor may protrude any amount into walks, halls, corridors, passageways, or aisles. (1121B.1, Fig 11B-7A)
5. Free-standing objects mounted on posts or pylons may overhang 12" maximum from 27" to 80" above the ground or finished floor. (1121B.1)
6. Protruding objects shall not reduce the clear width of an accessible route or maneuvering space. (1121B.1)
7. Walks, halls, corridors, passageways, aisles, or other circulation spaces shall have 80" minimum clear head room. (1121B.2, Fig 11B-7A)
8. Any obstruction that overhangs a pedestrian way shall be a minimum of 80" above the walking surface as measured from the bottom of the obstruction. (1121B.2, Fig 11B-28)
9. Where a guy support is used parallel to a path of travel, including, but not limited to, sidewalks, a guy brace, sidewalk guy or similar device shall be used to prevent an overhanging obstruction as defined. (1133B.8.2)
10. If a walk crosses or adjoins a vehicular way, and the walking surfaces are not separated by curbs, railings, or other elements between the pedestrian areas and vehicular areas, the boundary between the areas shall be defined by a continuous detectable warning which is 36" wide, complying with Section 1024.3. (1133B.8.5)
11. Transit boarding platforms shall conform to the requirements of Section 1133B.8.3. *Only approved DSA/AC detectable warning products and directional surfaces shall be installed as provided in the California Code of Regulations, Title 24, Part 1, Articles 2, 3, and 4.* *(1133B.3.4)*

STAIRWAYS

1. Stairways shall have handrails on each side, and every stairway required to be more than 88" in width shall be provided with not less than one intermediate handrail for each 88" of required width. Intermediate handrails shall be spaced approximately equally across the entire width of the stairway. (1033.3.3.6)
2. Each stairway adjacent to an area for evacuation assistance shall have a minimum clear width of 48" between handrails. (1114B.2.2.3)
3. Handrails shall be 34" to 38" above the nosing of the treads. (1133B.4.2.1, Fig 11B-35)
4. Handrails shall extend a minimum of 12" beyond the top nosing and 12" plus the tread width beyond the bottom nosing and ends shall be returned or terminate in newel posts or walls or handrails. (1133B.4.2, Fig 11B-35 & 37)
5. Where the extension of the handrail in the direction of the stair run would create a hazard, the termination of the extension shall be made either rounded or returned smoothly to the floor, wall, or post. Where the stairs are continuous from landing to landing, the inner rail shall be continuous and need not extend out into the landing. (1133B.4.2.4, Fig 11B-37)
6. The handgrip portion of handrails shall be not less than 1-1/4" nor more than 1-1/2" in *cross-sectional nominal dimension* or the shape shall provide an equivalent gripping surface. The handgrip portion of handrails shall have a smooth surface with no sharp corners. Gripping surfaces (top and sides) shall be uninterrupted by newel posts, other construction elements, or obstructions. Any wall or other surface adjacent to the handrail shall be free of sharp or abrasive elements. Edges shall have a minimum radius of 1/8 inch. (1133B.4.2.5.1, Fig 11B-36)
7. *The orientation of at least one handrail shall be in the direction of the run of the stair nosing and, and shall not reduce the minimum required width of stairs. (1133B.4.2.6.2)*
8. Handrails projecting from a wall shall have a space of 1-1/2" between the wall and the handrail. Handrails may be located in a recess if the recess is a maximum of 3" deep and extends at least 18" above the top of the rail. Handrails shall not rotate within their fittings. (1133B.4.2.5, Fig 11B-36)
9. The upper approach and the lower tread of each stair shall be marked by a strip of clearly contrasting color at least 2" wide and not more than 4" wide placed parallel to and not more than 1" from the nose of the step or landing to alert the visually impaired. The strip shall be of a material that is at least as slip-resistant as the other treads of the stair. (1133B.4.4, Fig 11B-35)
10. Where stairways cross a building, the upper approach and all treads shall be marked by a strip of clearly contrasting color at least 2" wide and not more than 4" wide placed parallel to and not more than 1" from the nose of the step or landing to alert the visually impaired. The strip shall be of a material that is at least as slip-resistant as the other treads of the stair. A painted strip shall be acceptable. (1133B.4.4, Fig 11B-35)
11. All tread surfaces shall be slip-resistant. Weather exposed stairs and their approaches shall designed so that water will not accumulate on walking surfaces. Treads shall have smooth, rounded, or chamfered exposed edges, and no abrupt edges at the nosing (lower front edge). (1133B.4.6.1, Fig 11B-35)
12. The nosing shall not project more than 1-1/2" past the face of the riser below. (1133B.4.5.2, Fig 11B-35)
13. Open risers are not permitted. On any given flight of stairs, all steps shall have uniform riser height and uniform tread widths consistent with 1003.3. Stair treads shall be no less than 11" deep, measured from riser to riser. Risers shall be sloped or the underside of the nosing shall have an angle not less than 60 degrees from the horizontal. (1133B.4.5.3, Fig 11B-35)

CLEANER AIR SYMBOL

1. *Publicly funded facilities or any facilities leased or rented by State of California may have a "CLEANER AIR SYMBOL" to identify a room, facility and paths of travel that are accessible to and usable by people who are adversely impacted by airborne chemicals or particulate(s) and/or the use of electrical fixtures and/or devices. When used, the symbol shall comply Sections 1117B.5.11.1, 1117B.5.11.2 Ord. 1117B.5.11.3 (1117B.5.11, Fig 11B-40)*

CONTROLS & OPERATING MECHANISMS

1. Controls and operating mechanisms required to be accessible by Section 101.4.11 shall comply with the requirements of Section 1117B.5 (1117B.5.1)
2. Clear floor space complying with Section 1118B.4 that allows a forward or parallel approach by a person using a wheelchair shall be provided at controls, dispensers, receptacles, and other operable equipment. (1117B.6.2)
3. The highest and lowest operable part of all controls, dispensers, receptacles, and other operable equipment shall be placed within 48" of the floor but not lower than 15" if forward approached and within 54" but not lower than 9" if side approached. Electrical and communication system receptacles on walls shall be mounted no less than 15" above the floor. (1117B.6.3)
4. Controls and operating mechanisms shall be operable with one hand and shall not require tight grasping, pinching, or twisting of the wrist. To force required to activate controls shall be no greater than 5 pounds of force. (1117B.6.4)
5. Vending machines shall be installed in compliance with Sections 1117B.6 through 1117B.6.4.
6. Faucet controls and operating mechanisms for kitchen sinks shall be operable with one hand and shall not require grasping, pinching, or twisting of the wrist. The force required to active faucet controls and operating mechanisms for kitchen sinks shall be no greater than 5 lbf Lever-operated, push-type, and electronically controlled mechanisms are examples of acceptable designs. Self-closing valves are allowed if the faucet remains open for at least 10 seconds. (1117B.2.1.6.1)

SPACE ALLOWANCE & REACH RANGES

1. The minimum clear floor or ground space required to accommodate a single, stationary wheelchair and occupant is 30" by 48". The minimum clear floor or ground space for wheelchairs may be positioned for forward or parallel approach to an object. Clear floor or ground spaces for wheelchairs may be a part of the knee space required

CITY OF LOS ANGELES

LADBS

LARUCP

Title 24, California Code of Regulations
Accessibility Regulations
Supplemental Correction List No. 1
(Effective 11-01-2002)

P.C.#_____

Sanitary Facilities, Drinking Fountains, Telephones, Alterations and Wheelchair Lifts

SANITARY FACILITIES (GENERAL)

1. Sanitary facilities that serve buildings, facilities or portions of buildings or facilities that are required to be accessible by these standards shall conform to the requirements of Section 1115B.1. (1115B.1)

2. Where separate facilities are provided for non-disabled persons of each sex, separate facilities shall be provided for persons with disabilities of each sex also. Where unisex facilities are provided for persons without disabilities, at least one unisex facility shall be provided for persons with disabilities within close proximity to the non-accessible facility. (1115B.2, Fig 11B-1A)

	A	E	K
Toilet centering from wall	18"	15"*	12"*
Toilet seat height	17"-19"	15"	10"-12"
Grab bar height (side)	33"	27"	20"-22"
Toilet paper in front of toilet	12" max	7" min*	0" max*
	Dimensions to top of seat		
Napkin disposal in front of toilet	12" max	12" max	N/A
Dispenser or mirror height	40" max	36" max	32" max
Lavatory/sink top height	34" max	29" max	24" max
Lavatory/sink knee clearance	27" min	24" min	19" min
Urinal lip height	17" max	15" max	13" max
Urinal flush handle height	44" max	37" max	32" max
Drinking fountain bubbler height	39" max	33" max	30" max
Drinking fountain knee clearance	27" min	24" min	22" min
Receptacle handrail height	34"-38"	27"	22"

* Deviates from code requirements and requires a written finding of inability.

A = Adult dimensions (age 12 and over)
E = Elementary dimensions
K = Kindergarten and pre-school dimensions (1115B-1)

3. Where facilities are to be used solely by small children, the specific heights may be adjusted to meet their accessibility needs. See Table above for suggested mounting heights. (1115B.3)

The dimensions are recommended by the Division of the State Architect, Office of Regulation Services. These recommendations are based on the federal "recommendations for Accessibility for Children in Elementary School" and other recognized publications on access for children.

4. Doorways leading to men's sanitary facilities shall be identified by an equilateral triangle 1/4" thick with edges 12" long and a vertex pointing upward. Women's sanitary facilities shall be identified by a circle 1/4" thick and 12" in diameter. (1115B.5)

5. Unisex sanitary facilities shall be identified by a circle 1/4" thick, 12" in diameter, with a 1/4" thick triangle superimposed on the circle and within the 12" diameter. (1115B.5)

6. Geometric (circle & triangle) symbols on sanitary facility doors shall be centered on the door at a height of 60" and their color and contrast shall be distinctly different from the color and contrast of the door. (1115B.5)

NOTE: See also Section 1117B.5.7 for additional signage requirements applicable to sanitary facilities.

SINGLE ACCOMMODATION SANITARY FACILITIES

NOTE: Single Accommodation Sanitary Facility is defined as "a room that has not more than one of each type of sanitary fixture, is intended for use by only one person at a time, has no partition around the toilet, and has a door that can be locked on the inside by the room occupant." (203)

1. There shall be sufficient space in the toilet room for a wheelchair measuring 30" wide by 48" long to enter the room and permit the door to close. (1115.B.7.2)

2. There shall be in the room, a clear floor space of at least 60" in diameter, or a T-shaped space complying with Figures 11B-12(a) and (b). No door shall encroach into this space for more than 12" except for the panel door to any water closet compartment if there is one. (1115B.7.2, Fig 11B-1A)

3. The water closet shall be located in a space which provides a minimum 28" wide clear space from a fixture or a minimum 32" wide clear space from a wall at one side. The other side shall provide 18" from the centerline o"he water closet to the wall. A minimum 48" clear space shall be provided in front of the water closet. (1115B.7.2, Fig 11B-1A)

4. All doors, fixtures, and controls shall be on ag accessible route with a minimum clear width of 36" except at doors. If a person in a wheelchair must make a turn around an obstruction, the minimum clear width of the accessible route shall be as shown in Figure 11B-5E. (1115B.7.2)

MULTIPLE ACCOMMODATION SANITARY FACILITIES

NOTE: Multiple Accommodation Sanitary Facility is defined as "a room that has more than one [illegible] and is intended for the use of more than one person at a time, and which usually is provided with privacy compartments or screens shielding some fixtures from view". (214)

1. A clear space measured from the floor to a height of 27" above the floor, within the sanitary facility room, of sufficient size to inscribe a circle with a diameter not less than 60", or a clear space 56" by 60" in size, shall be provided for wheelchair maneuvering. Doors shall not swing into the floor space required for any fixture. Other than the door to the accessible water closet compartment, in any position may encroach into this space by not more than 12". (1115B.7.1.1 & 1115B7.1.2, Fig 11B-1B)

2. A water closet fixture located in a compartment shall provide a minimum 28" wide clear space from a fixture or a minimum 32" wide clear space from a wall on one side of the water closet. The other side of the water closet shall provide 18" from the centerline of the water closet to the wall. Grab bars shall not project more than 3" into these clear spaces. *The stall shall be minimum of 60" wide.* (1115B.7.1.3, Fig 11B-1B)

3. A minimum 48" long clear space shall be provided in front of the water closet if the compartment has an end opening door (facing the water closet), and a minimum 60" long clear space shall be provided in front of the water closet if the compartment has a door located at the side. Grab bars shall not project more than 3" into these clear spaces. (1115B.7.1.3, Fig 11B-1A & B)

4. Water closet compartment shall be equipped with a door that has an automatic-closing device, and shall have a clear, unobstructed opening width of 32" when located at the end and 34" when located at the side with the door positioned at an angle of 90 degrees from its closed position. (1115B.7.1.4, Fig 11B-1A & B)

5. When standard compartment doors are used, with a minimum 9" clearance for footrests underneath and a self-closing door, clearance at the strike edge, as specified in Section 1133B.2.4.3, is not required. (1115B.7.1.4)

6. The inside and outside of the compartment door shall be equipped with a loop or U-shaped handle immediately below the latch. The latch shall be flip-over style, sliding, or other hardware not requiring the user to grasp or twist. (1115B.7.1.4)

7. Except for door opening widths and door swings, a clear unobstructed access not less than 44" shall be provided to water closet compartments designed for use by persons with disabilities and the space immediately in front of a water closet compartment shall be not less than 48" as measured at right angles to compartment door in its closed position. (1115B.7.1.4, Fig 11B-1B)

8. Where six or more stalls are provided within a multiple accommodation toilet room, in addition to the standard accessible stall required above, at least one additional stall shall be 36" wide with an outward swinging self-closing door and parallel grab bars complying with Sections 1115B.6.2 through 1115B.8.4. (1115B.7.1.5)

SANITARY FACILITY FIXTURES & ACCESSORIES

1. The height of accessible water closets shall be a minimum of 17" and a maximum of 19" measured to the top of a maximum 2" thick seat, except that 3" seats shall be permitted only in alterations where the existing fixture is less than 15" high. *(1115B.2.1)*

2. A clear floor space 30" by 48" shall be provided in front of a lavatory to allow a forward approach. Such clear floor space shall adjoin or overlap an accessible route and shall extend into knee and toe space underneath the lavatory. A door swing shall not encroach into this clear space. (1115B.9.1.1, 1115B.7.1.2, Fig 11B-1B)

3. Lavatories, when located adjacent to a side wall or partition shall, be a minimum distance of 18" to the center line of the fixture. *(1115B2.1.2.1, Fig 11B-1A)*

4. Lavatories that are designated to be accessible shall be mounted with the rim or counter edge no higher than 34" above the finished floor and with a vertical clearance measured from the bottom of the apron or outside bottom edge of the lavatory of 29", reducing to 27" at a point located 8" back from the front edge. Knee clearance below the lavatory shall extend a minimum of 30" in width by 17" in depth. Toe clearance shall be the same width and shall be a minimum of 9" high from the floor and a minimum of 17" deep from the front of the lavatory. *(1115B.2.1.2.1, Fig.11B-1D)*

5. Hot water and drain pipes under accessible lavatories shall be insulated or otherwise covered. There shall be no sharp or abrasive surfaces under lavatories. *(1115B.2.1.2.2)*

6. Where urinals are provided, at least one shall have a clear floor space 30" by 48" in front of the urinal to allow forward approach. (1115B.9.4)

7. Urinals shall be floor mounted or wall hung. Where one or more wall hung urinals are provided, at least one with a rim projecting a minimum of 14" from the wall and at a maximum of 17" above the floor shall be provided. *(1115B.2.1.1.1)*

8. Controls for water closet flush valves shall be mounted on the wide side of toilet areas. *(1115B2.1)*

9. Water closet and urinal flush valve controls, and faucet and operating mechanism controls, shall be operable with one hand, shall not require tight grasping, pinching, or twisting of the wrist, and shall be mounted no more than 44" above the floor. *(1115B2.1 82, 1115B.2.1.1.3, 1115B.2.1.2.1)*

10. The force required to activate water closet and urinal flush valve controls, and faucet and operating mechanism controls, shall be no greater than 5 lbf. Electronic or automatic flushing controls are acceptable and preferable. *(1115B.2.1, 1115B.2.1.1.2, 1115B.2.1.2.1)*

11. Self-closing faucet control valves are allowed if the faucet remains open for at least 10 seconds. *(1115B.2.1.2.1)*

12. Mirrors shall be mounted with the bottom edge no higher than 40" from the floor. *(1115B.9.1.2)*

13. Where towel, sanitary napkins, waste receptacles, and other similar dispensing and disposal fixtures are provided, at least one of each type shall be located with all operable parts, including coin slots, within 40" from the finished floor. *(1115B.9.2)*

14. Toilet tissue dispensers shall be located on the wall within 12" of the front edge of the toilet seat and no lower than 19" from the floor. Dispensers that control delivery or that do not permit continuous paper flow shall not be used. (1115B.9.3, Fig 11B-1A)

15. Toilet room floors shall have a smooth, hard, non-absorbent surface such as Portland cement, concrete, ceramic tile or other approved material which extends upward onto the walls at least 5". Walls within water closet compartments and walls within 24" of the front and sides of urinals shall be similarly finished to a height of 48" and, except for structural elements, the materials used in such walls shall be a type which is not adversely affected by moisture. (1115B.9.5)

GRAB BARS

1. Grab bars shall be located on each side, or on one side and the back of the accessible toilet stall or compartment. (1115B.8.1, Fig 11B-1A,B &C)

2. Grab bars at the side shall be at least 42" long with the front end positioned 24" in front of the water closet stool and with the back end positioned no more than 12" from the rear wall. Grab bars at the back shall be not less than 36" long. (1115B.8.1, Fig 11B-1A,B, &C)

3. Grab bars shall be securely attached 33" above and parallel to the, except that where a tank-type toilet is used which obstructs placement at 33", the grab bar may be as high as 38". (1115B.8.1,Fig 11B-1A)

4. The diameter or width of the gripping surfaces of a grab bar shall be 1½" to 1½" nominal or the shape shall provide an equivalent gripping surface. If grab bars are mounted adjacent to a wall, the space between the wall and the grab bars shall be 1½". (1115B.8.2, Fig 11B-1C)

5. The structural strength of grab bars, tub and shower seats, fasteners, and mounting devices shall meet the following specifications: (1115B.8.3)

a. Bending stress in a grab bar or seat induced by the maximum bending moment from the application of a 250-lb point load shall be less than the allowable stress for the material of the grab bar or seat. (1115B.8.3.1)

b. Shear stress induced in a grab bar or seat by the application of a 250-lb point load shall be less than the allowable shear stress for the material of the grab bar or seat, and its mounting bracket or other support is considered to be fully restrained, then direct and torsional shear stresses shall not exceed the allowable shear stress. (1115B.8.3.2)

c. Shear force induced in fastener or mounting devices from the application of a 250-lb point load shall be less than the allowable lateral load of either the fastener or mounting device or the supporting structure, whichever has the smaller allowable load. (1115B.8.3.3)

d. Tensile force induced in a fastener by a direct tension force of a 250-lb point load, plus the maximum moment from the application of a 250-lb point load, shall be less than the allowable withdrawal load between the fastener and supporting structure. (1115B.8.3.4)

e. Grab bars shall not rotate within their fittings. (1115B.8.3.5)

6. The grab bar and any wall or other surface adjacent to it shall be free of any sharp or abrasive elements. Edges shall have a minimum radius of 1/8". (1115B.8.4)

BATHING FACILITIES & LOCKERS

1. Where facilities for bathing are provided for the public, clients, or employees, including showers, bathtubs, or lockers, at least one such facility, and not less than 1% of all facilities shall be made accessible.

2. Provide a clear floor space with minimum dimensions of ____ adjacent to bathtub. (1115B.6.1, Fig 11B-8)

3. Provide grab bars for bathtubs which comply with Section 1115B.8.2, 1115B.8.3, 1115B.8.4, (1115B.6.1.3,Fig 11B-9A, Fig 11B-9B)

4. Bathtubs shall be provided with a shower spray unit having a hose at least 60" long that can be used as a fixed shower head or as a handheld shower. (1115B.6.1.6, Fig 11B-9B)

5. Provide an in-tub seat or a seat at the head end of bathtubs which is mounted securely, does not slip during use, and is designed, including attachment, to meet the requirements of Section 1115B.8.3. (1115B.6.1.2, Fig 11B-9 & 9B)

6. Faucets and other controls for bathtubs shall be located between top of tub and grab bar, shall be operable with one hand, and shall not require tight grasping, pinching or twisting of the wrist. The force required to activate controls shall be no greater than 5 pounds. (1115B.6.1.4, Fig 11B-9B)

7. If provided, enclosures for bathtubs shall not obstruct controls or transfer from wheelchair onto bathtub seats or into tubs. Enclosures on bathtubs shall not have tracks mounted on their rims. (1115B.6.1.5, 1606)

8. Showers shall be either 60" minimum in width between wall surfaces and 30" minimum in depth with a full opening width on the long side, or 42" in width between wall surfaces and 48" minimum in depth with an entrance opening of 42". As an alternative, showers 60" minimum in width may be 36" minimum in depth as long as the entrance opening width is a minimum 56". (1115B.6.2.1, Fig 11B-2A, 2B & 2D)

9. Provide grab bars for compartment showers which comply with Section 1115B.8. *(Fig 11B-2A)*

10. When a threshold or recessed drop is permitted at compartment showers, it shall be a maximum of ½" in height and shall be beveled or sloped at an angle not exceeding 45 degrees from the horizontal. (1115B.6.2.2, Fig 11B-2A & 2B)

11. The maximum slope of the floor shall be 2% in any direction. Where drains are provided, grate openings shall be a maximum of ½" and located flush with the floor surface. (1115B.6.2.4.4)

12. The following compartment shower accessories shall be provided:

a. A folding seat, mounted 18" above the floor, and with a minimum space of 1" and a maximum space of 1-1/2" allowed between the edge of the seat and any wall. When folded, the seat shall not extend more than 6" from the mounting wall. See *Figures 11B-2A, 2B, & 2D for seat size and configuration.* (1115B.6.2.4.5.1, Fig 11B-2A, 2B, & 2D)

b. An L-shaped grab bar mounted between a minimum of 33" and a maximum of 36" above the shower floor and mounted on walls opposite and adjacent to the front edge of the seat, but not extended to beyond that portion of wall near the long side of the seat. (1115B.6.2.4.5.2, Fig 11B-2A, 2B, & 2D)

c. Grab bars complying with the diameter, loading, and projection requirements of Sections 1115B.8.2 through 1115B.8.4.

d. Water controls of a single lever design located on the side wall of the shower adjacent to the seat and mounted at 40" ± 1" above the shower floor and with the centerline of the controls within a reach range of no less than 18" and no more than 24" from the rear edge of the seat. The controls shall be operable with a maximum force of 5pf. (1115B.6.2.4.1 , Fig 11B-2A, 2B, & 2D)

e. A soap dish, when provided, located on the control wall at a maximum height of 40" above the shower floor and within reach limits from the seat.

f. A flexible hand-held shower unit with a hose at least 60" long provided within reach range of the seat at a distance not to exceed 27" horizontally, measured from the rear seat edge to the centerline of the mounting bracket. This unit shall be mounted at a maximum height of 48" ± 1" above the shower floor. (1115B.6.2.4.2 , Fig 11B-2A & 2B)

13. The following open shower accessories shall be provided:

a. A folding seat, mounted 18" above the floor, and with a minimum space of 1" and a maximum space of 1-1/2" allowed between the edge of the seat and any wall. When folded, the seat shall not extend more than 6" from the mounting wall. See *Figures 11B-2C* for seat size and configuration. (1115B.6.2.4.5.1 & 1115B.6.3, Fig *11B-2C*)

b. The shower located in a corner with an L-shaped or two grab bars, a minimum 24" in length and a minimum of 36" in length, with the 36" grab bar located on the wall facing the shower head and controls, but not extended to include that portion of wall over the long side of the seat. Grab bars shall be mounted between a minimum of 33" and a maximum of 36" above the shower floor. (1115B.6.2.4.5.2 & 1115B.6.3, Fig *11B-2C*)

c. Grab bars complying with the diameter, loading, and projection requirements of Sections 1115B.8.2 through 1115B.8.4.

d. Water controls of a single lever design located on the side wall of the shower adjacent to the seat and mounted at 40" ± 1" above the shower floor and with the centerline of the controls within a reach range of no less than 18" and no more than 24" from the rear edge of the seat. The controls shall be operable with a maximum force of 5pf. (1115B.6.2.4.1 , Fig 11B-2A, 2B, & 2D)

e. A soap dish, when provided, located on the control wall at a maximum height of 40" above the shower floor and within reach limits from the seat. (1115B.6.2.4.6)

f. A flexible hand-held shower spray unit with a hose at least 60" long provided within reach range of the seat at a distance not to exceed 27" horizontally, measured from the rear seat edge to the centerline of the mounting bracket. This unit shall be mounted at a maximum height of 48" ± 1" above the shower floor. (1115B.6.2.4.2 , Fig 11B-2A & 2B)

14. Showers shall be finished with a smooth, hard, non-absorbent surface such as Portland cement, concrete, ceramic tile or other approved material to a height of not less than 70" above the drain inlet. Materials other than structural elements used in such walls shall be if a type which is not adversely affected by moisture. (1115B.9.6)

15. Where, within the same functional area, two or more accessible showers are provided, there shall be at least one shower constructed opposite hand from the other or others (i.e., one left hand control vs. right hand control). (1115B.6.2.3, 1505.4)

16. Except within guest rooms and suites in hotels, motels, and similar transient lodging establishments, where accessible shower facilities are provided in areas subject to excessive vandalism, in lieu of providing the fixed flexible hose, two wall mounted shower heads shall be installed. Each shower head shall be installed so that it can be operated independently of the other and shall have swivel angle adjustments, both vertically and horizontally. One shower head shall be located at a height of 48" (plus or minus 1") above the floor. (1115B.6.2.4.3, 1606.3)

17. Enclosures, when provided for shower stalls, shall not obstruct transfer from wheelchairs onto shower seats. (1115B.6.2.6)

18. Doors and panels of shower and bathtub enclosures shall be substantially clear beveled, tempered, shatter-resistant materials. Hinged shower doors shall open outward. (1115B.9.7)

19. Glazing used in doors and panels of shower and bathtub enclosures shall be fully tempered, laminated safety glass, or approved plastic. When glass is used, it shall have a minimum thickness of not less than 1/8" when fully tempered, or 1/4" when laminated, and shall pass the test requirements of UBC Standard No. 24-2. (1115B.9.8)

20. Plastic used in doors and panels of showers and bathtub enclosures shall be of shatter-resistant type. (1115B.9.9)

21. At least one and not less than 1% of all lockers shall be made accessible to persons with disabilities, including clear space, reach range requirements, and a path of travel not less than 36" in clear width shall be provided to these lockers. (1115B.6.4)

DRINKING FOUNTAINS

1. In new construction, where only one drinking fountain area is provided on a floor, there shall be a drinking fountain which is accessible to individuals who use wheelchairs in accordance with Section *1115B.2.1.2* and one accessible to those who have difficulty bending or stooping. This can be accomplished by the use of a high-low fountain or by such other means as would achieve the required accessibility for each group on each floor. (1117B.1.1)

2. Drinking fountains shall be located completely within alcoves or otherwise positioned so as not to encroach into pedestrian ways. The alcove in which the water fountain is located shall not be less than 32" in width and 18" in depth. *Protruding objects located in alcoves or otherwise positioned so as to limit encroachment into pedestrian ways are permitted to project 4" into walls, corridors, passageways or aisles.* (1117B.1.2, *Fig 11B-3)*

3. Drinking fountains shall be a minimum of 18" in depth and there shall be a clear and unobstructed knee space under the drinking fountain not less than 27" in height and 8" in depth, the depth measurement being taken from the front edge of the fountain. *(1115B.2.1.5.1,* Fig 11B-3)

4. There shall be toe clearance of 9" in height above the floor, and 17" in depth from the front edge of the fountain. *(1115B.2.1.5.1)*

5. A side approach drinking fountain is not acceptable. *(1115B.2.1.5.1).*

8. If telephone enclosures are provided, they shall comply with the following: (1117B.2.7)

a. For side approach telephones, the enclosure overhang shall be no greater than 19" and the height of the lowest overhanging part shall be equal to or greater than 27". (1117B.2.7.1, Fig 11B-4(a))

b. For forward approach telephones, if the enclosure overhang is greater than 12", the clear width of the enclosure shall be 30" minimum; if the clear width of the enclosure is less than 30", the height of the lowest overhanging part shall be equal to or greater than 27". (1117B.2.7.3, Fig 11B-4(c))

c. Entrances to full-height enclosures shall be 30" minimum. (1117B.2.7.2, Fig 11B-4(b))

d. Where telephone enclosures protrude into walls, halls, corridors, or aisles, they shall comply with Section *1133B.5* (Hazards and Protruding Objects). (1117B.2.7.4)

9. Telephones shall be equipped with a receiver that generates a magnetic field in the area of the receiver cap. If banks of public telephones are provided, at least one in each bank and a total of at least 25% of the total number of public telephones, including closed circuit telephones in a building or facility, shall be equipped with a volume control. Such telephones shall be capable of a minimum of 12 dbA and a maximum of 18 dbA above normal. If an automatic reset is provided, 18 dbA may be exceeded. Public telephones with volume control shall be hearing aid compatible and shall be identified by a sign containing a depiction of a telephone handset with radiating sound waves. (1117B.2.8,*Fig 11B-14B*)

10. If a total of four or more public pay telephones are provided at the interior and exterior of a site, and if at least one of the total is in an interior location, then at least one interior public text telephone shall be provided. (1117B.2.9.1)

11. Text telephones shall comply with the following: (1117B.2.9.2)

a. Text telephones used with a pay telephone shall be permanently affixed within or adjacent to the telephone enclosure. If an acoustic coupler is used, the telephone cord shall be sufficiently long to allow connection of the text telephone and telephone receiver. (1117B.2.9.2.1)

b. Pay telephones designed to accommodate a portable text telephone shall be equipped with a shelf and an electrical outlet within or adjacent to the telephone enclosure. The telephone handset shall be capable of being placed flush on the surface of the shelf. The shelf shall be capable of accommodating a text telephone and shall have 6" minimum vertical clearance in the area where the text telephone is to be placed. (1117B.2.9.2.2)

c. Equivalent facilitation may be substituted for the above requirements. (1117B.2.9.2.3)

d. Text telephones shall be identified by the international *TTY symbol* (see Figure 11B-14). If a facility has a public text telephone, directional signage indicating the location of the nearest such telephone shall be placed adjacent to all banks of telephones that do not contain a text telephone. Such directional signage shall include the international *TTY symbol*. If a facility has no banks of telephones, the directional signage shall be provided at the entrance or in a building directory. (1117B.2.9.3)

12. If telephone books are provided, they shall be located within 48" of the floor if forward approached and within 54" if side approached. (1117B.2.12)

ALTERATIONS TO EXISTING BUILDINGS & FACILITIES

NOTE: Areas of renovation, structural repair, alteration and additions to existing buildings are required to meet the same accessibility standards as for new construction projects. In addition, an accessible path of travel from that entrance to the area of remodel, and accessible restrooms, drinking fountains, and public telephones serving the area of remodel must be provided.

1. When alteration, structural repair, or additions are made to existing buildings or facilities, those alterations shall comply with all provisions for New Buildings standards. These requirements shall apply to only the area of specific alteration, structural repair or addition. (1134B.2)

2. Furthermore, the requirements for New Buildings standards shall include the following areas: (1134B.2.1)

a. A primary entrance to the building or facility and the primary path of travel to the specific area of alteration, structural repair or addition,

AND

b. Existing sanitary facilities, drinking fountains and *signs and* public telephones serving the area of alteration, structural repair or addition must fully comply.

3. If the total cost of alterations, structural repair or additions does not exceed the threshold valuations of $_____ and the cost of providing all the accessible features mentioned in item No.2 above exceeds 20% of the total cost without these features, an "unreasonable hardship" may be created. In choosing which accessible features to provide, priority should be given to those elements that will provide the greatest access, in the following order: (1134B.2.1exccp.1)

a. An accessible entrance;

b. An accessible route of travel to the altered area;

c. At least one accessible restroom for each sex;

d. Accessible telephones;

e. Accessible drinking fountains; and

f. Other accessible elements such as parking, storage, and alarms.

4. In alteration projects involving certain types of privately funded multi-story buildings and facilities previously approved and built without elevators, areas requiring compliance above and below the ground floor are subject to the 20% disproportionality provisions described in Item No. 3 above (even if the value of the project exceeds the unreasonable hardship valuation). (1134B.2.1exccp.2)

The types of buildings and facilities are:

a. Office buildings and passenger vehicle service stations of three stories or more and 3,000 square feet or more per floor.

b. Offices of physicians and surgeons.

c. Shopping centers

d. Other buildings and facilities three stories or more and more than 3,000 square feet per floor if a reasonable portion of services sought and used by the public is available on the accessible level.

5. *Where it is technically infeasible in the area of an alteration to make existing restroom facilities code compliant and to install separate sanitary facilities for each sex, then the installation of at least one unisex toilet/bathroom per floor being altered, located in the same area as existing toilet facilities, will be permitted. Such facility shall meet the requirements of Section 1115B.7.2* (1134B2.2)

6. *When automatic door operator is utilized to operate a pair of doors, at least one of the doors shall provide a clear, unobstructed opening width of 32" with the door positioned at an angle of 90 degrees from its closed positions. Exception:*

a. *In existing buildings the following shall apply:*
   1) *Where the occupant load is less than 10, except those occupancies in Occupancy Classification, doorways may be 30" in clear width.*
   2) *Where occupant load is greater than 10 and it is determined that compliance with Section 1133B2.3 would create an unreasonable hardship, doorway may be 30" in clear width.*

b. *In existing buildings, the provisions of this section shall not apply when legal or physical constraints will not allow compliance with these building standards or equivalent facilitation without creating an unreasonable hardship. See Section 101.17.11, Item 4.* (1134B.3.1)

7. Buildings that have been remodeled to provide specific sanitary facilities and/or elevators for the public use that conform to Title 24 shall have this information posted in the building lobby, preferably as part of the building directory. (1117B.5.8.1.3)

8. In existing sales facilities, check stands shall comply with the requirements of Section 1111B.1.3.

9. A 34-inch high toilet seat shall be permitted where the existing water closet fixture is less than 15 inches high. *(1115B.2.1 exccp. #1)*

10. The drinking fountain bubbler shall be activated by a manually operated system not requiring a force greater than 5 lbf., shall be installed at the front edge of the fountain or preferably an electronically controlled device. (1115B.2.1.5.3, Fig 11B-3)

11. The bubbler outlet orifice shall be located within 6" of the front of the drinking fountain and shall be within 36" of the floor. The water stream from the bubbler shall be substantially parallel to the front edge of the drinking fountain. *(1115B.2.1.5.3,* Fig 11B-3)

12. The spout shall provide a flow of water at least 4" high so as to allow the insertion of a cup or glass under the flow of water. The force required to activate controls shall be no greater than 5 lbf. *(1115B.2.1.5.4)*

PUBLIC TELEPHONES

1. If public telephones are provided, they shall be made accessible to the extent required by the following table: (1117B.2.1)

# of each type of telephone provided on each floor	*Minimum # of telephones required to comply with 1117B.2**
1 or more single units	1 or at least 50% of telephone units per floor
1 telephone bank	1 or at least 50% of telephone units per bank
2 or more banks	1 or at least 50% of telephone units per bank ... at least 1 telephone per floor shall meet the requirements for a forward reach telephone

* Additional public telephones may be installed at any height.

2. A clear floor or ground space at least 30" by 48" that allows either a forward or parallel approach by a person using a wheelchair shall be provided at telephones. (1117B.2.2, Fig 11B-4)

3. Bases, enclosures, and fixed seats shall not impede approaches to telephones by people who use wheelchairs. (1117B.2.5)

4. The highest operable part of the telephone shall be within 48" of the floor if forward approached and 54" if side approached. (1117B.2.6, Fig 11B-4)

5. Telephones mounted diagonally in a corner that require wheelchair users to reach diagonally shall have the highest operable part no higher than 54" above the floor. (1117B.2.6, Fig 11B-4)

6. The cord from the telephone to the handset shall be at least 29" long. (1117B.2.11)

7. Telephones shall have push-button controls where service for such equipment is available. (1117B.2.10)

SPECIAL ACCESS (WHEELCHAIR) LIFTS

NOTE: Special Access (Wheelchair) Lifts may be provided between levels, in lieu of passenger elevators, when the vertical distance between landings, structural design, and safeguards are as allowed by the State of California, Division of the State Architect, Access Compliance Section, the Department of Industrial Relations, Division of Occupational Safety and Health, and any applicable safety regulations of other administrative authorities having jurisdiction.
If lifts are provided, they shall be designed and constructed to facilitate unassisted entry, operation and exit from the lift and shall comply with the restrictions and enhancements of this section in conjunction with sections 3093 to 3094, Part 7 of the California Code of regulations. *(1116B.2)*

1. Lifts shall be designed and constructed to facilitate unassisted entry, operation, exit from the lift, and shall comply with Chapter 11B, "Clear Floor or Ground Space", Section 1124B, "Ground and Floor Surfaces", Section 1118B.2.4.1, "Controls and Operating Mechanisms"; and ASME A17.1, Safety Code for Elevators and Escalators, Part XX, 1990.

2. Lifts may be provided as part of an accessible route only for the following conditions: (1116B.2)

a) To provide an accessible route to a performing area in an assembly occupancy. (1116B.2.1)

b) To comply with the wheelchair viewing position line-of-sight and dispersion requirements of Section *1104B.2.5.* (1116B.2.2)

c) To provide access to incidental occupiable spaces and rooms which are not open to the general public and which house no more than 5 persons, including but not limited to, equipment control (1116B.2.3) rooms and projection booths.

d) To provide access where existing site constraints or other constraints make use of a ramp or an elevator infeasible. (1116B.2.4)

NOTE: Sections *1116B.2.4* Exception 3. does not limit the use of a Special Access (Wheelchair) Lift to the four conditions listed above when the lift is being installed as part of an accessible route for additions or alterations.

3. Special Access lifts shall not be used as a component in an egress system,

Exception: When provided as a means of egress component per Section 1116B2.2 the specialty access lift is permitted to be part of an accessible exit component when:

a. *The building has a supervised automatic sprinkler system.*

b. *The area served by the special access lift does not serve more than 4 wheelchair viewing positions.* *(1116B.1.5, 1116B.1.10, Fig 11B-40B)*

c. *The length of the common path of travel to a point where the occupant has a choice of two directions or to an exit shall not exceed 20 feet. The length of the common path of travel shall include the vertical travel distance of the lift.*

d. *The special access lift is provided with standby power or with self-rechargeable battery power that provides sufficient power to operate all platform lift functions for a minimum of 5 upward and downward trips.* *(1116B3)*

4. The lift platform or support shall be of sufficient size to accommodate large motorized wheelchairs per Chapter 11B and shall have a rated capacity of not less than as required by ASME A17.1, 1990.

5. There shall be a level and clear floor area or landing at each floor or level served by special access lifts to allow safe access to and exiting from the lift platform.

6. In new construction, the minimum size of landings shall be 60" by 60". Other dimensions may be substituted where it can be demonstrated that a person using a wheelchair measuring 30" by 48" can enter and operate the lift safely. (1116B.2.4.1)

NOTE: Level and clear floor areas or landings as specified in this section shall be part of "Path of Travel" requirements. (1116B.2.4.2)

7. The top landing shall be equipped with a device, door, or gate 42" in height. Such door or gate shall be equipped with both mechanical and electric contacts which prevent operation of the platform unless they are properly closed.

8. "Call-Send" controls shall be provided at each landing in compliance with Chapter 11B. Where platform lifts are used to provide barrier-free path of travel requirements, they shall facilitate unassisted entry, operation, and exit from the lift.

9. Solid, smooth enclosures provided as per ASME 17.1 shall be provided for the platform lift, which provides a reasonable degree of safety for persons with disabilities using the lift and others accessed to the lift.

10. When the enclosure required *in item 9 above* is not provided because the lift serves only 2 landings, the underside of the lifting platform shall be equipped with a safety pan cover which will automatically shut off the lifting device should any obstruction under the platform interfere with its downward travel. The platform shall be provided with a 42" high solid gate at the bottom landing entrance. A smooth vertical wall or fascia shall be provided from the sill of the top landing to the bottom landing level.

11. A pit may be provided to permit the platform to stop flush with the bottom landing level (which shall be protected by a runway enclosure that extends a minimum of 42" above the top landing level), or in lieu of a pit, a ramp shall be [illegible] which does not exceed 1" rise in 12" of horizontal run. The surface of the ramp shall have a non-skid surface.

12. The lift assembly shall be securely supported to maintain the platform in a level position and to prevent the loosening or displacement of any portion of the unit. All portions of the lift machinery shall be protected from intrusion of water.

13. The rated speed of the platform shall not exceed 20 feet per minute and the operating control shall be the constant pressure type designed so that it can be easily operated by a person with a disability. A push-bar control designed for use by persons with disabilities or a control that provides equal usability shall be provided.

14. When the lift is hydraulically operated or is of the electric-hydraulic type, re-leveling switches shall be provided to keep the platform level with the landing at which it has been parked.

ADDITIONAL CORRECTIONS

CITY OF LOS ANGELES

LADBS

LARUCP

Title 24, California Code of Regulations
Accessibility Regulations
Supplemental Correction List No. 5
(Effective 11-01-2002)

Elevators, Egress and Areas for Evacuation Assistance

P.C. #

ELEVATORS

NOTE: In buildings two or more stories in height, served by an elevator, or a building served by an elevator required by Chapter 11A or 11B or a building served by an elevator required for accessibility by Section 101.17, all elevators provided shall accommodate a wheelchair. *(1116B.1.2, 1116B.1.3)*

1. Passenger elevators shall be located near a major path of travel and provisions shall be made to assure that they remain accessible and usable at all times the building is occupied. *(1116A.1.12, 1116B.1.10)*

2. The car inside shall allow for the turning of a wheelchair. The minimum clear distance between walls or between wall and door, excluding return panels, shall be not less than 80" by 54" for center-opening doors, and 68" by 54" for side-slide opening doors. Minimum distance from wall to return panel shall be not less than 51". *(1116A.1.7, 1116B.1.6, Fig 11A-A)*

3. Minimum clear width for elevator doors shall be 36". *(1116A.1.4, Fig 11A-A)*

4. Provide the following note(s) or detail(s) on the plans:

a. A handrail shall be provided on one wall of the car, preferably the rear. The rails shall be smooth and the inside surface at least 1-1/2" clear of the walls at a nominal height between 31" and 33" above the floor. *(1116B.1.11, Fig 11A-B)*

b. The centerline of elevator floor buttons shall be no higher than 54" above the finish floor for side approach and 48" for front approach. Where possible a 48 inch maximum height for elevator floor buttons is preferred. *(1116A.1.7, 1116A.1.8, Fig 11A-B)*

c. Floor buttons shall be provided with visual indications to show when each call is registered. The visual indications shall be extinguished when each call is answered. *(1116A.1.7, 1116B.1.8, Fig 11A-B)*

d. Except for photo electric tube by-pass switches, emergency controls, including the emergency stop and alarm, shall be grouped in or adjacent to the bottom of the panel and shall be no lower than 2-1/1" from the bottom of the panel unless a key is required for operation, in which case only one set must comply with these height requirement. *(1116A.1.7, 1116B.1.8, Fig 11A-B)*

e. The centerline of the call exit button shall be no higher than 3/4" of the floor. The buttons shall be a minimum of 3/4" in size and shall be raised 1/8" ± 1/32" above the surrounding surface. Visual indication shall be provided to show each call registered and extinguished when answered. Objects adjacent to and below hall call buttons shall not project more than 4" from the wall. *(1116A.1.5, 1116B.1.10, Fig 11B-40B)*

f. The emergency telephone handset shall be positioned no higher than 4'-0" above the floor, and the cord shall be a minimum of 2'-0" in length. *(1116A.1.7, 1116B.1.6)*

<

CITY OF LOS ANGELES

LADBS LOS ANGELES BUILDING AND SAFETY

LARUCP

Title 24, California Code of Regulations Accessibility Regulations Correction List for Privately/Publicly Funded Multi-Family Dwelling Units

The State of California delegates to the City/County the authority to ensure compliance with Title 24, Part 2 of the California Code of Regulations. This correction list indicates specific areas of Title 24, Part 2 which are applicable to your project. Please be aware that the owner(s) of this building and his/her consultants are responsible for compliance with Federal Regulations contained in the Americans with Disabilities Act (ADA) and Fair Housing Act (HUD). Where the ADA & HUD requirements exceed those contained in Title 24, Part 2, it is the owner's responsibility to ensure compliance with the ADA & HUD, as the County is not delegated the authority to plan review or inspect projects for ADA & HUD compliance.

PLAN CHECK NO. _____ PLAN CHECK EXPIRATION DATE _____

JOB ADDRESS _____

OCCUPANCY GROUP _____ TYPE OF CONSTRUCTION _____ NO. OF STORIES _____

APPLICANT _____ TELEPHONE _____

E-MAIL _____

ADDRESS _____

REVIEWED BY _____ DATE _____ TELEPHONE _____

RECHECKED BY _____ DATE _____ TELEPHONE _____

Your application for a permit, together with plans and specifications, has been examined and the issuance of a permit is withheld for the reasons set forth. The approval of plans and specifications does not permit the violation of any section of the Building Code, or other local ordinance or state law.

NOTE: Numbers in parenthesis ( ) refer to Code sections of the **2001** edition of the California Building Code, Table (T), Plumbing Code (P.C.), Mechanical Code (M.C.), Electrical Code (E.C.) or Fire Code (F.C.) . Asterisk (*) refers to local amendments. N.D.S. refers to The National Design Specifications.

INSTRUCTIONS

- Corrections with circled item numbers apply to this plan check.
- In the left hand margin of the circled corrections, please indicate the sheet number and detail or note number on the plans where the corrections are made. Resubmit marked original plans and two corrected sets of plans and this plan review list.
- Incomplete or unreadable drawings will not be accepted.
- The plan check engineer will be available for conference and telephone calls between the hours of _____ and _____, on the following days: _____. Appointments are required.
- Incorporate all comments as marked on the checked set of plans and this corrections sheet.
- Items in ***Bold and Italic*** reflect changes effective November 1, 2002

A. SITE DEVELOPMENT & ACCESSIBLE ROUTE OF TRAVEL

NOTE: Accessible Route of Travel is defined as "a continuous unobstructed path connecting all accessible elements and spaces in a accessible building or facility that can be negotiated by a person with a severe disability using a wheelchair and that is also safe for and usable by persons with other disabilities. (1102A.1-A)

NOTE: Except within individual dwelling units, an accessible route of travel shall not pass through kitchens, storage rooms, restrooms, closets or other spaces used for similar spaces. (1102A.1-A)

1. At least one accessible route within the boundary of the site shall be provided from public transportation stops, accessible parking and accessible passenger loading zones, and public streets or sidewalks, to the accessible building entrance they serve. The accessible route shall, to the maximum extent feasible, coincide with the route for the general public. (1107A.2.1)
2. The accessible route of travel shall be the most practical direct route between accessible building entrances, accessible site facilities, and the accessible entrance to the site. (1107A.2.1)
3. When more than one building or facility is located on a site, accessible routes of travel shall be provided between buildings and accessible site facilities. (1107A.2.1)
4. When a building or portion of a building is required to be accessible or adaptable, an accessible route of travel shall be provided to all portions of the building, to accessible building entrances, and between the building and the public way. (1107A.2.1)
5. At least one accessible route shall connect to the following: (1107A.2.1)
   a. Accessible buildings, facilities, elements and spaces that have the same site.
   b. Accessible building or facility entrances with all accessible spaces and elements and with all accessible dwelling units within the building or facility.
6. An accessible route shall connect at least one accessible entrance of each accessible dwelling unit with those exterior and interior spaces and facilities that serve the accessible dwelling unit. (1107A.2.1)
7. Where more than one route of travel is provided, all routes shall be accessible. (1107A.3)

expense. Towed vehicles may be reclaimed at _____ or by telephoning _____. (1118A.5)

16. The surface of each accessible parking space or stall shall have a surface identification duplicating either of the following schemes:
   a. By outlining or painting the stall or space in blue and outlining on the ground in the stall or space in white or suitable contrasting color a profile view depicting a wheelchair with occupant. *(1118A.5H)*
   b. By outlining a profile view of a wheelchair with occupant in white on blue background. The profile view shall be located so that it is visible to a traffic enforcement officer when a vehicle is properly parked in the space and shall be 36" high by 36" wide. *(1118A.5B2)*

C. WALKS AND SIDEWALKS

1. Walks and sidewalks shall have a continuous common surface, not interrupted by steps or by abrupt changes in level exceeding ½". (1120A.6.1)
2. Sidewalks serving individual dwelling units in covered multifamily building shall be 36" minimum in clear width. All other sidewalks shall be 48" minimum in clear width. (1120A.8.1, 1120A.8.1.R3(Except.))
3. Walk and sidewalk surface cross slopes shall not exceed 1 inch per foot. Where due to local conditions create unreasonable hardship, the cross slope may be increased to a maximum of ½" per foot for distances not to exceed 20 feet. (1120A.6.1R3)
4. Walk and sidewalk surfaces shall be slip-resistant as follows: (1120A.6.1)
   a. Surfaces with a slope of less than 6% gradient shall be at least as slip-resistant as that described as a medium sand finish. (1120A.6.1.R1)
   b. Surfaces with a slope of 6% or greater gradient shall be slip-resistant. (1120A.6.1.R2)
5. Walks, sidewalks, and pedestrian ways shall be free of gratings wherever possible. For gratings located in the surface of any these areas, grid openings in gratings shall be limited to ½" in the direction of traffic flow. (1120A.6.2)
6. When the slope in the direction of travel of any walk exceeds 1 vertical to 20 horizontal (5%slope), it shall comply with the provisions of Section 1120A.5, Ramps. (1120A6.3)
7. All walks with continuous gradients shall have level areas at least 5 feet in length at intervals of at least every 400 feet. (1120A.6.6)
8. Walks shall be provided with a level area not less than 60"x 60" at a door or gate that swings toward the walk, and not less than 42" wide by 48" deep at a door or gate that swings away from the walk. Such walks shall extend 24" to the side of the strike edge of a door or gate that swings toward the walk. (1120A.6.5,Fig 11B-10A thru11B-22,11B-26B)
9. *Abrupt* changes in level along any accessible route shall not exceed 1/2 inch. When changes in level do occur, they shall be bevelled with a slope no greater than 1 unit vertical in 2 units horizontal (50% slope), except that level changes not exceeding 1/4 inch may be vertical. When changes in levels greater than ¼ inch are necessary, they shall comply with the requirements for curb ramps. *(1120A.6.4.1)*

D. CURB RAMPS

NOTE: Curb Ramp is defined as a sloping pedestrian way, intended for pedestrian traffic which provides access between a walk or sidewalk to a surface located above or below an adjacent curb face. *(1102A3-C)*

NOTE: Curb Ramps shall be constructed where a pedestrian way crosses a curb. The preferred and recommended location for a curb ramps is in the center of the crosswalk or each street corner. Where it is necessary to locate a curb ramp in the center of the curb return and the street surfaces are marked to *identify pedestrian crosswalks*, the lower end of the curb ramp shall terminate within such crosswalk areas. (1117A.4.1)

1. Provide a curb ramp at _____ (1117A.4.1)
2. Curb ramps shall be a minimum of 4' in width and shall be, generally, in a sloped plane, with a minimum of surface warping and cross slope. (1117A.4.2)
3. The slope of curb ramps shall not exceed 1 vertical to 12 horizontal. (1117A.4.3, 1117A4.5)
4. Transitions from ramps to walks, gutters, or streets shall be flush and free of abrupt changes, except that the lower end of each curb ramp shall have a ½" lip beveled at 45 degrees. (1117A.4.3)
5. Curb ramp located where pedestrians must walk across the ramp, shall have flared sides; the maximum slope of the flare shall be 1 unit vertical in 10 units horizontal (10% slope). Curb ramps with returned curbs can be used where pedestrians would not normally walk across the ramp. (1117A.4.3)

2. For L-shaped with a range or cook top at the base of the U, a 60 inch clear width between cabinet fronts, appliances or fixtures shall be provided to allow a parallel approach, or base cabinets shall be removable at that location to a height of 27 inches above the floor to allow knee space for a forward approach. Base cabinets directly under kitchen sink counter area, including toeboard and shelving, shall be removable without the use of special tools or knowledge. Maneuvering space may include any knee space or toe space available below bathroom fixtures. (1109A.2-1R2, *T1109A.2-2R2*)
   (1109A.2 Except.)
3. A minimum linear length of 30 inches of counter top shall be provided for the kitchen sink, and a minimum linear length of 30 inches of countertop shall be provided for a work surface both of which shall be designed to enable repositioning to a minimum height of 28 inches. The base cabinets directly under sink and work surface counter areas which are designed for repositioning shall be removable to provide clearance for a wheelchair. *(1112A.4)*
4. Only 5% of *covered multifamily* apartment house dwelling units that are required to be accessible are required to comply with the requirements of repositionable counter tops per item 3 above. *(1112A.4* Except. 1)
5. Stone, cultured stone and tiled countertops may be used without meeting the repositioning requirements per item 3. (1112A.4 Except. 2)
6. Two 15-inch minimum width breadboards may be provided in lieu of the required 30 inches of countertop work surface per item 3. *(1112A.4* Except. 3)
7. Lower shelving and/or drawer space shall be provided in the kitchen at a height of no more than 48 inches. *(1112A.5)*
8. Base cabinets directly below kitchen sink counter area shall be removable without the use of specialized tools. Finished flooring shall be provided on the floor beneath the counter top. *(1112A.6)*
9. Kitchen sink faucet controls shall be operable with one hand and shall not require grasping, pinching or twisting of the wrist. The force required to activate controls shall be no greater than 5 lbs. Lever-operated, push-type and electronically controlled mechanisms are examples of acceptable designs. Self-closing valves are allowed if the faucet remains open for at least 10 seconds. *(1112A.3)*

H. BATHROOMS

1. Bathroom entrance doorways shall have an 18" clear space to the side of the strike edge of the door on the swing side of the door and meet other requirements of section 1120A.2. *(T1109A.2-1R1,T1109A.2-2R1)*
2. There shall be sufficient maneuvering space for a person using a wheelchair or other mobility aid to enter and close the door, use the fixtures, reopen the door, and exit. Doors may swing into the clear space provided at any fixture if the maneuvering space is provided. Maneuvering space may include any knee space or toe space available below bathroom fixtures. *(T1109A.2-1R2,T1109A.2-2R2)*
   (1109A.2 Except.)
3. Where the door swings into the bathroom, there shall be a clear space (approximately 30" by 48") within the room to position a wheelchair or other mobility aid clear of the path of the door as it is closed and to permit use of fixtures. *(T1109A.2-1R3,T1109A.2-2R3)*
4. Reinforced walls for grab bars as shown in Section 1109A.5. *(T1109A.2-1R5,R6, T1109A.2-2R7,R9)*
5. There shall be a minimum clear space 48" parallel by 30" perpendicular to the side of a bathtub or bathtub-shower combination (measured from the foot of the bathtub) to provide for the maneuvering of a wheelchair and transfer to and from the bathing facilities, which may include the maneuverable area under the lavatory. *(T1109A.2-1R4, T1109A.2-2R6)*
6. The water closet shall be located in a space 36" in clear width with 48" of clear space provided in front of the water closet. This space may include maneuvering space that may be arranged so as not to impede access. Doors shall not infringe on the above clearances. The minimum height of water closet seats shall be 15" above the floor. *(1109A.3)*
7. ***Water closet controls for the flush valves shall be mounted on the wide side of toilet areas, no more than 44" above the floor. The force required to activate controls shall be no greater than 5 pound force.*** *(1112A.3.1)*
8. ***At least one accessible lavatory shall be provided within any toilet facility. Where mirrors and towel fixtures are provided at least one of each shall be accessible.*** *(1109A.4)*
9. ***For lavatories, see Tables 1109A.2-1&1109A.2-2***
10. ***Hot water and drainpipes accessible under lavatories shall be insulated or otherwise covered. There shall be no sharp or abrasive surfaces under lavatories.*** *(1109A.4.2)*
11. ***Faucet controls and operation mechanisms shall be operable with one hand and shall not require tight grasping, pinching or twisting of the wrist. The force required to activate controls shall be no greater than 5 pound force. Lever operated, push-type, and electronically***

Public telephones with volume control shall be hearing aid compatible and shall be identified by a sign containing a depiction of a telephone handset with radiating sound waves. (1111A.6, Fig.11B-14B)

If lifts are provided, they shall be designed and constructed to facilitate unassisted entry, operation, and exit from the lift, and shall comply with restrictions and enhancements of this section in conjunction with Section 3093 to 3094.5, Part 7 of the California Code of Regulations. (1110A.2)

K. SWIMMING POOLS

1. Swimming pools deck areas in conjunction with privately funded multi-family dwellings must be accessible and an assisting device must be provided to assist persons with disabilities in gaining entry to the pool and shall comply with the provisions of Chapters 11B *and 31B*. (1113A)
2. ***Swimming pool seat requirements need to meet sec. 1104B.4.3.4***

L. *DRINKING FOUNTAINS*

1. ***Wall-mounted and post-mounted cantilevered drinking fountains and water coolers shall have a clear knee space a minimum 30 inches in width and shall also have a minimum clear floor space 30 inches by 48 inches to allow a person in a wheelchair to approach the unit facing forward.*** *(1112A.2.1)*
2. ***The spout shall provide a flow of water at least 4 inches high so as to allow the insertion of a cup or glass under the flow of water. The force required to activate controls shall be no greater than 5 pound force.*** *(1112A.2.2)*

M. ELEVATORS

NOTE: In buildings two or more stories in height, served by an elevator, or a building served by an elevator required for accessibility by Section 1108A or serving commercial uses located above or below the ground floor, all elevators provided shall accommodate a wheelchair and shall comply with *Section 1110A.1.1-1110A.1.13.* *(1108A.1)*

NOTE: Private elevators serving only one dwelling unit need not be accessible. (1110A.1exc(e))

For detailed requirements, see Supplemental Correction List No.5.

N. SPECIAL ACCESS (WHEELCHAIR) LIFTS

NOTE: Special Access (Wheelchair) Lifts may be provided between levels, in lieu of passenger elevators, when the vertical distance between landings, structural design, and safeguards are as allowed by the State of California, *Division of the* State Architect, Access Compliance Section, the Department of Industrial Relations, Division of Occupational Safety and Health, and any applicable safety regulations of other administrative authorities having jurisdiction.

B. ACCESSIBLE PARKING

NOTE: Each lot or parking structure where parking is provided for clients, guests, employees or residents shall be accessible. (1118A.1)

1. Provide garages which serves a privately funded dwelling unit shall be accessible. Such garage is accessible if a person with a disability can exit the dwelling unit's accessible entry door and enter the garage from the driveways. *(1104A.1)*
2. Accessible parking spaces shall be located on the shortest possible accessible route of travel to an accessible building entrance. When practical, the accessible route of travel shall not cross lanes for vehicular traffic. When crossing vehicular traffic lanes is necessary, the route of travel shall be designated and marked as a crosswalk. (1118A.1)
3. Provide _____ disabled parking space(s)for residents. (2% of the covered number of dwelling units). *A minimum* of one parking space is required for each site parking amenity. Signage is not required. (1118A.1)
4. Provide _____ disabled parking space(s) for visitors (5% of the *visitor parking*). Signage is required and shall not be blocked from view by a vehicle parked in the space. *(1118A.1)*
5. All entrances to and vertical clearances within parking structures shall have a minimum vertical clearance of 8 foot 2 inches where required for accessibility to parking spaces with physical disabilities.
   NOTE: Private garages are exempt from the vertical clearance requirement. (1118A2)
6. Accessible parking spaces shall be located on the shortest accessible route of travel from adjacent parking to an accessible entrance as near as practical to the accessible entrance. (1118A4)
7. Where single accessible parking spaces are provided, they shall be 14' wide and outlined to provide a 9' parking area and a 5' loading and unloading access aisle on the passenger side of the vehicle. *The word "NO PARKING" shall be painted on the ground within each five- foot loading and unloading access aisles. This notice shall be painted in white letters not less than 12 inches high and located so that it is visible to traffic enforcement officials.* (1118A.4.1, *Fig.11B-18B*)
8. When more than one accessible parking space is provided, in lieu of providing a 14' wide space for each parking space, two spaces can be provided within a 23' wide area lined to provide a 9' parking area on each side of a 5' loading and unloading access aisle in the center. *The word "NO PARKING" shall be painted on the ground within each five- foot loading and unloading access aisles. This notice shall be painted in white letters not less than 12 inches high and located so that it is visible to traffic enforcement officials.* (1118A.4.1, *Fig.11B-18A*)
9. One in every eight accessible spaces, but not less than one, shall be served by an access aisle 8' wide minimum, *placed on the side opposite the driver's side when the vehicle is going forward into the parking space*, and shall be designated "van accessible." *The word "NO PARKING" shall be painted on the ground within each eight- foot loading and unloading access aisles. This notice shall be painted in white letters not less than 12 inches high and located so that it is visible to traffic enforcement officials. (1118A.4.2,Fig.11B-18A,18B,11C)*
10. The minimum length of an accessible parking space shall be 18'. (1118.4.1,*Fig.11B-18A,18-B,18C)*
11. Accessible parking spaces shall be so located that persons with disabilities are not compelled to wheel or walk behind parked cars other than their own. (1118A.3), Fig.11B-18A thru 18C
12. Surfaces slopes of accessible parking spaces shall be minimum possible and shall not exceed 5' ft. (1118A4.4)
13. In each parking area, a bumper or curb shall be provided and located to prevent encroachment of cars over the required width of walkways. *Ramps shall not encroach into any accessible parking space or the adjacent access aisle. The maximum cross slope in any direction for both parking space and access aisle shall not exceed 2 % slope.*
   (1118A.4.3, Fig11B-18A through 11B-18C)
14. Every parking space required shall be identified by a sign, centered between 3 feet and 6 feet above the parking surface, at the head of the parking space. The sign shall include the international symbol of accessibility and state "RESERVED", or equivalent language. (1118A.5)
15. An additional sign shall also be posted, in a conspicuous place, at each entrance to off-street parking facilities, or immediately adjacent to and visible from each stall or space. The sign shall be not less than 17" by 22" in size with letter not less than 1" in height, which clearly and conspicuously states the following:
   "Unauthorized vehicles parked in designated accessible spaces not displaying distinguishing placards or license plates issued for persons with disabilities may be towed away at the owner's

6. A level landing 4' deep shall be provided at the upper end of each ramp, even to full width to permit safe egress from the ramp surface, or the slope of the flanked or flared sides of the curb ramp shall not exceed 1 unit vertical to 12 units horizontal. (1117A.4.4)
7. The surface of each curb ramp and its flared sides shall be stable, firm, and slip-resistant and shall be of contrasting finish from that of the adjacent sidewalk. (1117A.4.6)
8. A curb ramp shall have a detectable warning that extends the full width and depth of the curb ramp beside the grooved border when the ramp slope is less than 1 vertical to 15 horizontal. Detectable warnings shall consist of raised truncated domes with a diameter of nominal 0.9", a height of nominal 0.2" and a center-to-center spacing of nominal 2.35", and shall contrast visually with adjoining surfaces, either light-on-dark or dark-on-light. Warning surfaces shall be of the *Table IV* of Standard No. 4.29.1-1972 in color value contrast between the yellow warning and the main walking surface, and from 70 percent, a 1" wide black strip shall separate the yellow warning from the main walking surface.
   Only approved DSA/AC detectable warning products and directional surfaces shall be installed. (1117A.4.7)
9. Curb ramps shall be located to prevent their obstruction by parked cars. Built-up-curb ramps shall be located so that they do not project into vehicular traffic lanes. (1117A.4.8)

E. RAMPS (EXTERIOR OR INTERIOR)

NOTE: Any path of travel shall be considered a ramp if its slope is greater than 1 unit vertical in 20 units horizontal (5%). The least possible slope shall be used for any ramp. (1120A.6.3)

1. The maximum slope of a ramp that serves any exitway, provides access for persons with disabilities, or is in the path of travel shall be 1" rise in 12" of horizontal. (1120A.5.4)
2. The cross slope of ramp surfaces shall be no greater than 1unit vertical in 50 units horizontal (2% slope). (1120A.5.4.1)
3. The width of ramps shall be as required for stairways and exits. (1120A.5.1, 1120A.5.2)
4. Pedestrian ramps serving primary entrances to buildings having an occupant load of 300 or more shall have a minimum clear width of 60". (1120A.5.3)
5. Ramps serving Group R occupancies may be 36" clear width when the occupant load is 50 or less. (1120A5.3)

controlled mechanisms are examples of acceptable designs. Self-closing valves are allowed if the faucet remains open for at least 10 sec.
(1109A.4.2)

12. Where the toilet is not placed adjacent to a side wall the bathroom shall have installed provisions for installation of floor-mounted, foldaway, or similar alternative grab bars. (1109A.6)
13. Where the powder room (a room with a toilet and a sink) is the only side facility located on an accessible level of a multi-story dwelling unit, it shall comply with the requirements for reinforced walls for grab bars. (1109A.6)
14. Where the toilet is placed adjacent to a side wall, reinforcement shall be installed on both sides or one side and the back. (1109A.6)
15. If reinforcement is installed at the back of the toilet, it shall be installed between 20" and 30" above the floor. The grab bar reinforcement shall be a minimum of 40" in length. (1109A.8)
16. Reinforcement installed at the side of the toilet shall be installed 32" to 39" above the floor. The reinforcement shall be installed a maximum of 12" from the rear wall and shall extend a minimum of 28" in front of the water closet fixture. The grab bar reinforcement shall be a minimum of 6" nominal in height. (1109A.8)
17. A bathtub may be installed without surrounding walls provided reinforced areas are provided for installation of fixture controls and grab bars. (1109A.7)
18. Where a tub is installed with surrounding walls, grab bar reinforcement shall be installed on each end of the bathtub, 32" to 39" above the floor, extending a minimum of 24" aligned with the front edge of the bathtub toward the back wall of the bathtub. The grab bar reinforcement shall be a minimum of 6" nominal in height. (1109A.7)
19. Grab bar reinforcement shall be installed on the back wall of the bathtub commencing a minimum of 6" above the bathtub rim and extending upward to a point a minimum of 36" above the floor. The grab bar backing shall be installed horizontally a length to permit the installation of a 48" grab bar with each end a maximum of 6" from the end walls of the bathtub. The grab bar reinforcement material shall be a minimum of 6" nominal in height. (1109A.7)
20. When shower stall is provided in an accessible dwelling unit, at least one shower stall shall measure at least 42" wide by 48" deep with an entrance opening at least 36". When a threshold is used, it shall be a maximum of ½ inch in height and have a beveled or sloped angle not exceeding 45% from the horizontal. Maximum slope of the shower floor shall be ¼ inch per foot in any

9. A pit may be provided to permit the platform to stop flush with the bottom landing level (which shall be protected by a runway enclosure that extends a minimum of 42" past the top landing level), or in lieu of a pit, a ramp shall be provided which does not exceed 1" rise in 12" of horizontal run. The surface of the ramp shall have a non-skid surface. (1003.3.6.1, *1120A4.1*)
10. The lift assembly shall be securely supported to maintain the platform in a level position and to prevent more than 1" of displacement of any portion of the unit. All portions of the lift machinery shall be protected from intrusion of water. (1120A.4.2.1)
11. The rated speed of the platform shall not exceed 20 feet per minute and the operating control shall be the constant pressure type designed so that it can be easily operated by a person with a disability. A push-bar control designed for use by persons with disabilities or a control that provides equivalent facility shall be provided. (1120A.4.2.2)
12. When the lift is hydraulically operated or is of the electric-hydraulic type, noleveling switches shall be provided to keep the platform level with the landing at which it has been parked.

N. STAIRWAYS

1. Stairways shall have handrails on each side, and every stairway required to be more than 88" in width shall be provided with not less than one intermediate handrail for each 88" of required width. Intermediate handrails shall be spaced approximately equally across the entire width of the stairway. *(1003.3.6.1, 1120A4.1)*
2. Handrails shall be 34" to 38" above the nosing of the treads. (1120A.4.2.1)
3. Handrails shall extend a minimum of 12" beyond the top nosing and 12" plus the tread width beyond the bottom nosing and shall be returned or terminate in newel posts or safety terminals. (1120A.4.2.3 & 1120A.4.2.3)
4. Where the extension of the handrail in the direction of the stair run would create a hazard, the termination of the extension shall be made either rounded or returned smoothly to the floor, wall, or post. Where the stairway is continuous from landing to landing, the inner rail shall be continuous and need not extend out into the landing. (1120A.4.2.4)
5. The handgrip portion of handrails shall be not less than 1-1/4" nor more than 1-1/2" in cross-sectional dimension or the shape shall provide an equivalent gripping surface. The handgrip portion ofhandrails shall have a smooth surface with no sharp corners. Any wall or other surface adjacent to the handrail shall be free of abrasive or sharp elements. Edges shall have a minimum radius of 1/8". (1120A.4.2.6)

6. Handrails projecting from a wall shall have a space of 1-1/2" between the wall and the handrail. Handrails may be located in a recess if the recess is a maximum of 3" deep and extends at least 18" above the top of the rail. Handrails shall not rotate within their fitting. (1120A.4.2.5)
7. The upper approach and the lower tread of each stair shall be marked by a strip of clearly contrasting color at least 2" wide placed parallel to and not more than 1" from the nose of the step or landing to alert the visually impaired. The strip shall be of material that is at least as slip-resistant as the other treads of the stair. (1120A.4.3)
8. Where stairways occur outside a building, the upper approach and all treads shall be marked by a strip of clearly contrasting color at least 2" wide and placed parallel to and not more than 1" from the nose of the step or landing to alert the visually impaired. The strip shall be of a material that is at least as slip-resistant as the other treads of the stair. A painted strip shall be acceptable. (1120A.4.3)
9. All tread surfaces shall be slip-resistant. Treads shall have smooth, rounded, or chamfered exposed edges, and no abrupt edges at the nosing (lower front edge). (1120A.4.3.1)
10. The nosing shall not project more than 1-1/2" past the face of the riser below. (1120A.4.3.2)
11. *In covered multifamily buildings, open risers are not permitted on accessible routes of travel.* *(1120A.4.2.3)*

O. HAZARDS AND PROTRUDING OBJECTS

NOTE: Walks, halls, corridors, passageways, aisles or other circulation spaces shall have 80 inches minimum clear headroom. If vertical clearance of an area adjoining an accessible route is reduced to less than 80 inches nominal dimensions, a guardrail or other barrier having its leading edge at or below 27 inches above the finished floor shall be provided.

1. Abrupt changes in level, except between a walk or sidewalk and an adjacent street or driveway, exceeding 4" in a vertical dimension, such as at planters or fountains located in or adjacent to walks, sidewalks, or other pedestrian ways, shall be identified by warning curbs projecting at least 6" in height above the walk or sidewalk surface to warn the blind of a potential drop off. (1120A.7.1)
2. When a guardrail or handrail is provided, no warning curb is required when a guide rail is provided centered 3" ± 1" above the surface of the walk or sidewalk, the walk is 5 percent or less gradient, or no adjacent hazard exists. (1120A.7.1)

F. DOORS

1. Every primary entrance to a dwelling unit required to be accessible shall be provided with a door buzzer, bell, chime or equivalent installation, mounted a maximum of 48 inches above the floor, connected to permanent wiring. (1108A.1)
2. Recessed doormats must be adequately anchored to prevent interference with wheelchair traffic. (1120A.1.3)
3. Exit door may be provided with a night latch, dead bolt or security chain provided such devices are openable inside without the use of a key or tool and mounted at a height not to exceed 48" above finished floor. (1120A.2.1,1003.3.1.8)
4. *Every required exit doorway shall be of a size as to permit the installation of a door not less than 3 feet in width and not less than 6 feet 8 inches in height. When installed, such door shall be capable of opening at least 90 degrees and shall be so mounted that the clear width of the exit way is not less than 32". In computing the exit width required by Sec.1003.2.2 the net dimensions of the exit way shall be used.* (1120A.2.2)
5. In covered multi-family dwelling units, doors and openings other than primary entrances within units shall provide a minimum of 32" nominal clear space, measured between the face of the door and the stop, when the door is in the 90-degree open position. 24-inch doors are acceptable. The nominal 32-inch clear opening provided by a standard 6-foot sliding patio door assembly is acceptable. (1109A.1Except)
6. Where a pair of doors is utilized, at least one of the doors shall provide a clear, unobstructed opening width of 32" with the leaf positioned at an angle of 90 degrees from its closed position. (1120A.2.3.1)
7. The floor or landing shall not be more than ½" lower than the threshold of the doorway. (1120A.2.4)
8. Except as provided at the primary entrance thresholds at sliding or rolling sliding door tracks, shall be no higher than 3/4". Thresholds and changes in level at these locations shall be beveled with a slope no greater than 1 unit vertical in 2 units horizontal. (1120A.2.4 Except 3)
9. Exterior deck, patio or balcony surfaces shall be no more than 4 inches below the floor level of the interior of the dwelling unit. Change in level greater than ½" shall be accomplished by means of a ramp. (1120A.2.4 Except 4)
10. The floor or landing at each side of an exit door shall be level and having a length in the direction of the door swing of at least 60 inches and the length opposite the direction of the door swing of 44 inches as measured at right angles to the plane of the door in its closed position.

EXCEPTIONS: 1. In Group R occupancies, the level area shall have a length both in the direction of door swing and opposite the direction of the door swing of 44" as measured at right angles to the plane of the door in its closed position.

2. In buildings containing covered multifamily dwelling units, the floor or landing immediately outside the entry may have a slope up to 1/5 inch per foot, in a direction away from the primary entrance of the dwelling unit for drainage.

3. Interior passage door(s) in Individual Group R, Division 3, and Group U Occupancies and within individual units of Group R, Division 1 Occupancies, such length need not to exceed 36 inches. (1120A.2.4.2 *Except* 1, 2, 3)

11. The width of the level area on the side to which the door swings shall extend 24" past the strike edge of the door for exterior doors and 16" past the strike edge for interior doors. (1120A.2.4.3)
12. Maximum effort to operate doors shall not exceed 8-1/2 pounds for exterior doors and 5 pounds for interior doors, such pull or push effort being applied at right angles to hinged doors and at the center plane of sliding or folding doors. Compensating devices or automatic door operators may be utilized to meet the above standards. When fire doors are required, the maximum effort to operate the door may be increased to the minimum allowable by the appropriate administrative authority, not to exceed 15 pounds. (1120A.2.5)
13. The bottom 10" of all doors except automatic and sliding shall have a smooth, uninterrupted surface to allow the door to be opened by a wheelchair footrest without creating a trap or hazardous condition. Where narrow frame doors are used, a 10" high smooth panel shall be installed on the push side of the door, which will allow the door to be opened by a wheelchair footrest without creating a trap or hazardous condition. (1120A.2.6)

G. KITCHENS

NOTE: Kitchens within adaptable dwelling units shall be accessible. *(1112A.1)*

1. Kitchens in covered *multi-family* dwelling units that are required to provide access to persons with physical disabilities shall have a clear space 30 inches by 48 inches that allows a parallel approach by a person in a wheelchair at the range or cook top and either a parallel or forward approach at the oven, dishwasher, refrigerator/freezer and trash compactor. *(1112A.2)*

3) The knee space in this section shall be provided by one of the following:

A. The space beneath the lavatory Is left clear and unobstructed.
B. Any cabinet beneath the lavatory is removable without the use of specialized knowledge or specialized tools or,
C. Doors to the cabinet beneath the lavatory are removable or openable to provide the required unobstructed knee space.

Top space should be provided as follows:
1) Shall be at least 30" wide and centered on the lavatory.
2) Shall be at least 17" deep, measured from the front edge.
3) Shall be at least 9" high from the floor.

In each case, the finish floor beneath the lavatory shall be extended to the back of the wall.
(T1109A.2-1R9,T1109A.2-2R12)

25. *In addition to requirements listed in T1109A2-2, all bathrooms shall conform to the following general accessibility requirements:*
   a. Title 24, Part 3, Calif. Electrical Code requirements for light switches, electrical outlets, thermostats and other environmental controls.
   b. Minimum 36-inch wide accessible route within each bathroom.
   c. General door widths and strike side clearances consistent with Sect. 1109A.1 and 1120A.
   d. Wall reinforcement for future grab bar installations consistent with Sect. 1109A
   (1109A2.4.1)

I. LAUNDRY ROOMS

1. If clothes-washing machines and clothes dryers are provided in covered multi-family buildings or dwelling units, at least one of each type of appliance shall be provided in each laundry area. Laundry rooms serving multi-family dwellings are not required to have front-lo

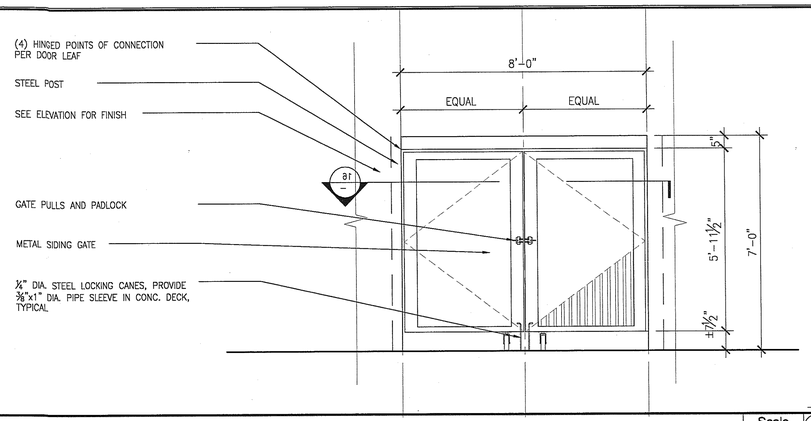

TRASH ENCLOSURE GATE — Scale 1/2 = 1'-0" — -

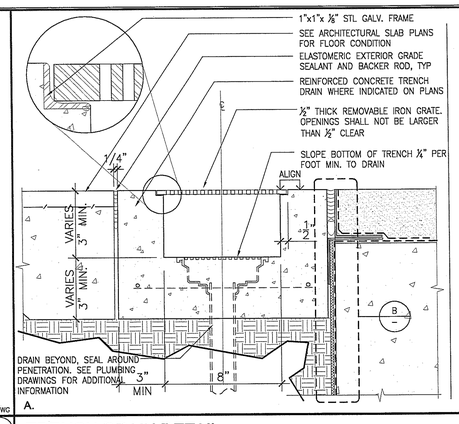

TRENCH DRAIN DETAIL — Scale 3" = 1'-0" — 8

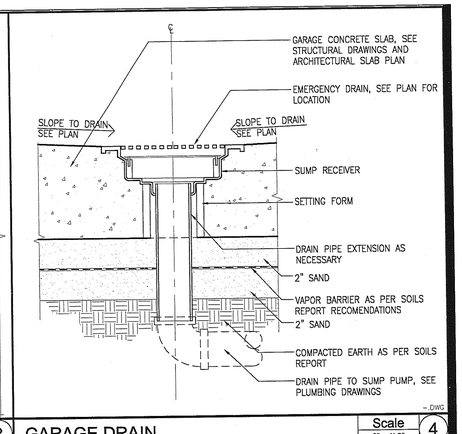

GARAGE DRAIN — Scale 3" = 1'-0" — 4

NOT USED — Scale — 19

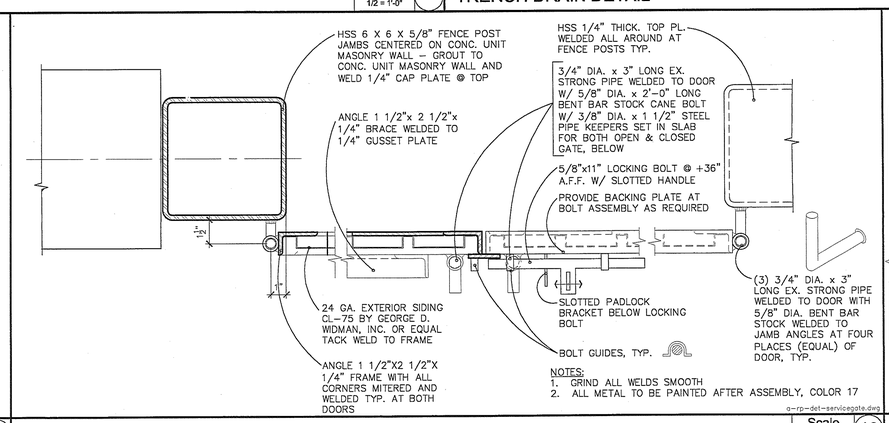

Service Yard Gate Detail — Scale 3" = 1'-0" — 16

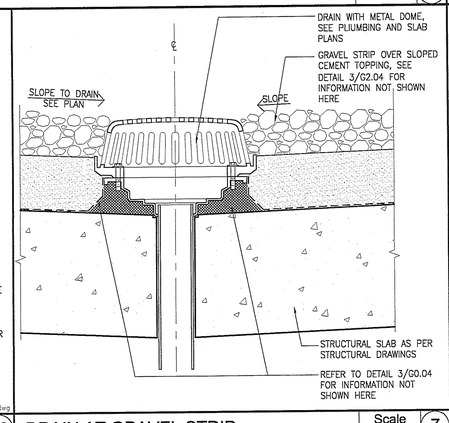

DRAIN AT GRAVEL STRIP — Scale 3" = 1'-0" — 7

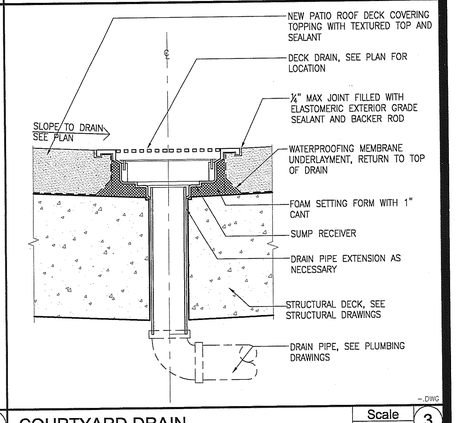

COURTYARD DRAIN — Scale 3" = 1'-0" — 3

NOT USED — Scale — 18

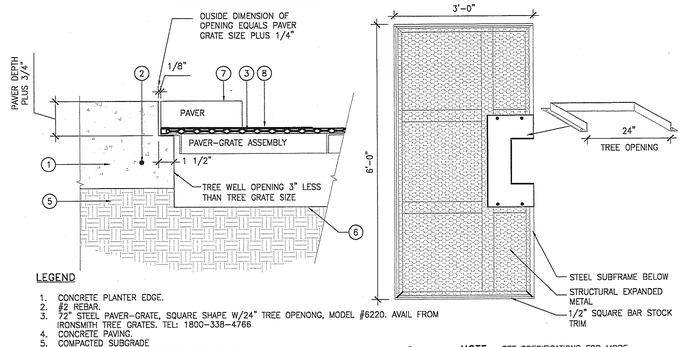

TREE-GRATE @ CONC. PAVING — Scale NTS — 10

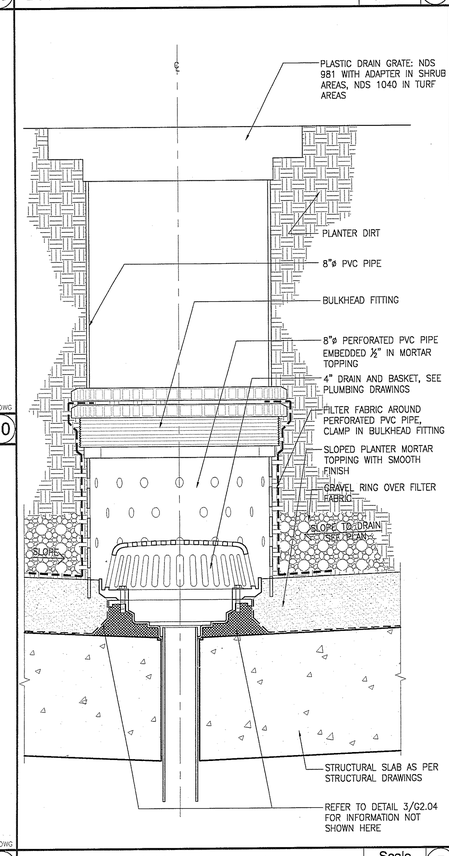

PLANTER DRAIN — Scale 3" = 1'-0" — 5

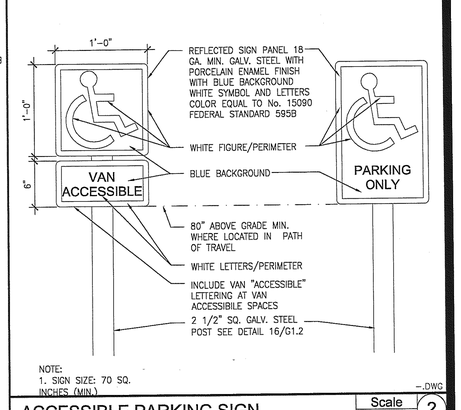

ACCESSIBLE PARKING SIGN — Scale 1 1/2" = 1'-0" — 2

NOT USED — Scale — 17

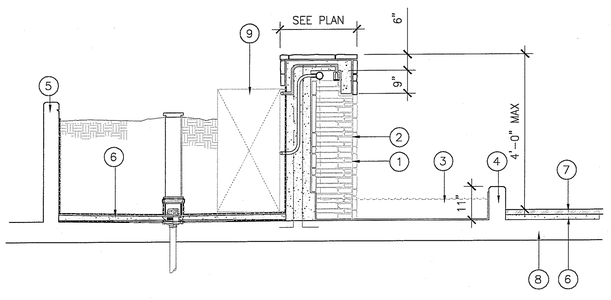

WATER FEATURE/ PLANTER SECTION — Scale 1/2" = 1'-0" — 9

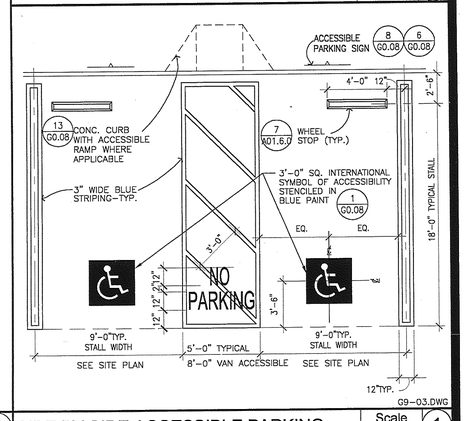

SIDE BY SIDE ACCESSIBLE PARKING — Scale N.T.S — 1

WWC OT
Widom Wein Cohen O'Leary Terasawa
3130 Wilshire Boulevard
Sixth Floor
Santa Monica, California 90403
T (310) 828-0040
F (310) 453-9432
www.wwcot.com
Inland Empire
Palm Springs
Moorpark
Shanghai, China

RECEIVED
10:08 am, Aug 14, 2008
FRAMEMAX

Building Department Submittal: June 1, 2007
Issued For Bid:
Issued For Construction:

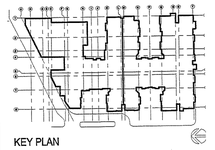

KEY PLAN

Project:
Jewish Home for The Aging
FOUNTAINVIEW AT RISENBERG VILLAGE
6440 Wilbur Ave
Reseda, CA. 91335
JEWISH HOME
JEWISH HOME FOR THE AGING
18855 Victory Blvd.
Reseda, CA 91335
Project Number: 04206.00

Site Details

Date: 04/05/2007
Drawn By:
Checked By:

G2.04
Sheet No.

File Path & Name: F:\PROJECTS\04206-00\A-CD\SHEETS_G2.04.DWG
© WWCOT 2006 May 28, 2007 - 03:33 pm

RECEIVED BY SUFFOLK ON 06/01/07

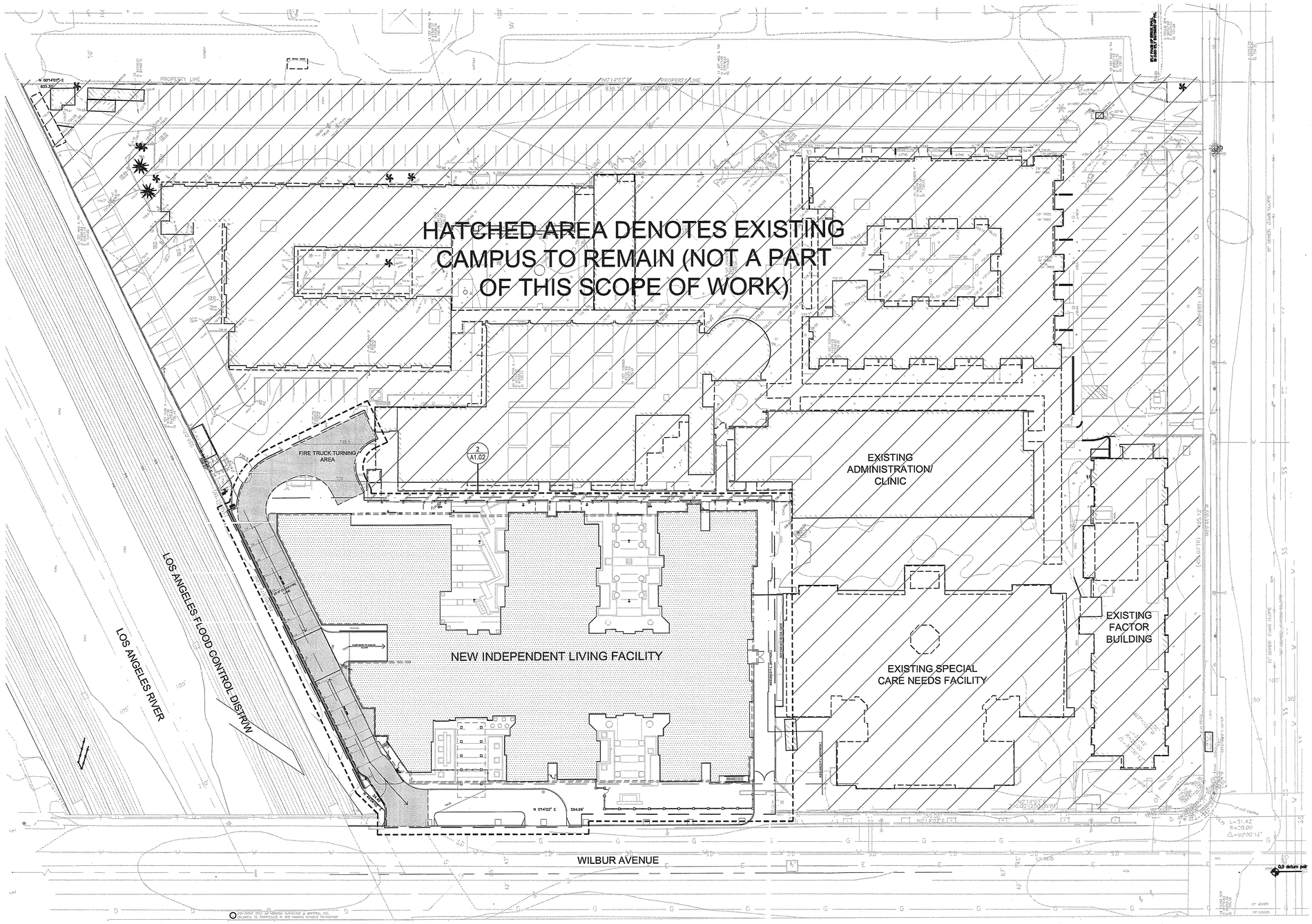

SITE PLAN

Scale 1"=30'-0" (1)

WWCOT
Widom Wein Cohen O'Leary Terasawa

3130 Wilshire Boulevard
Sixth Floor
Santa Monica, California 90403
T (310) 828-0040
F (310) 453-9432
www.wwcot.com

Inland Empire
Palm Springs
Moorpark
Shanghai, China

RECEIVED
10:08 am, Aug 14, 2008
FRAMEMAX

Building Department Submittal: June 1, 2007
Issued For Bid:
Issued For Construction:

KEY PLAN

Project:
Jewish Home for The Aging
FOUNTAINVIEW AT EISENBERG VILLAGE

6440 Wilbur Ave
Reseda, CA. 91335

JEWISH HOME FOR THE AGING
18855 Victory Blvd.
Reseda, CA 91335

Project Number: 04206.00

REFERENCE SITE PLAN

Date: 04/05/2007
Drawn By:
Checked By:

A1.01
Sheet No.

File Path & Name: F:\PROJECTS\04206-00\A-CD\SHEETS\A1.01.DWG
© WWCOT 2006 May 28, 2007 - 03:34 pm

RECEIVED BY SUFFOLK ON 06/01/07

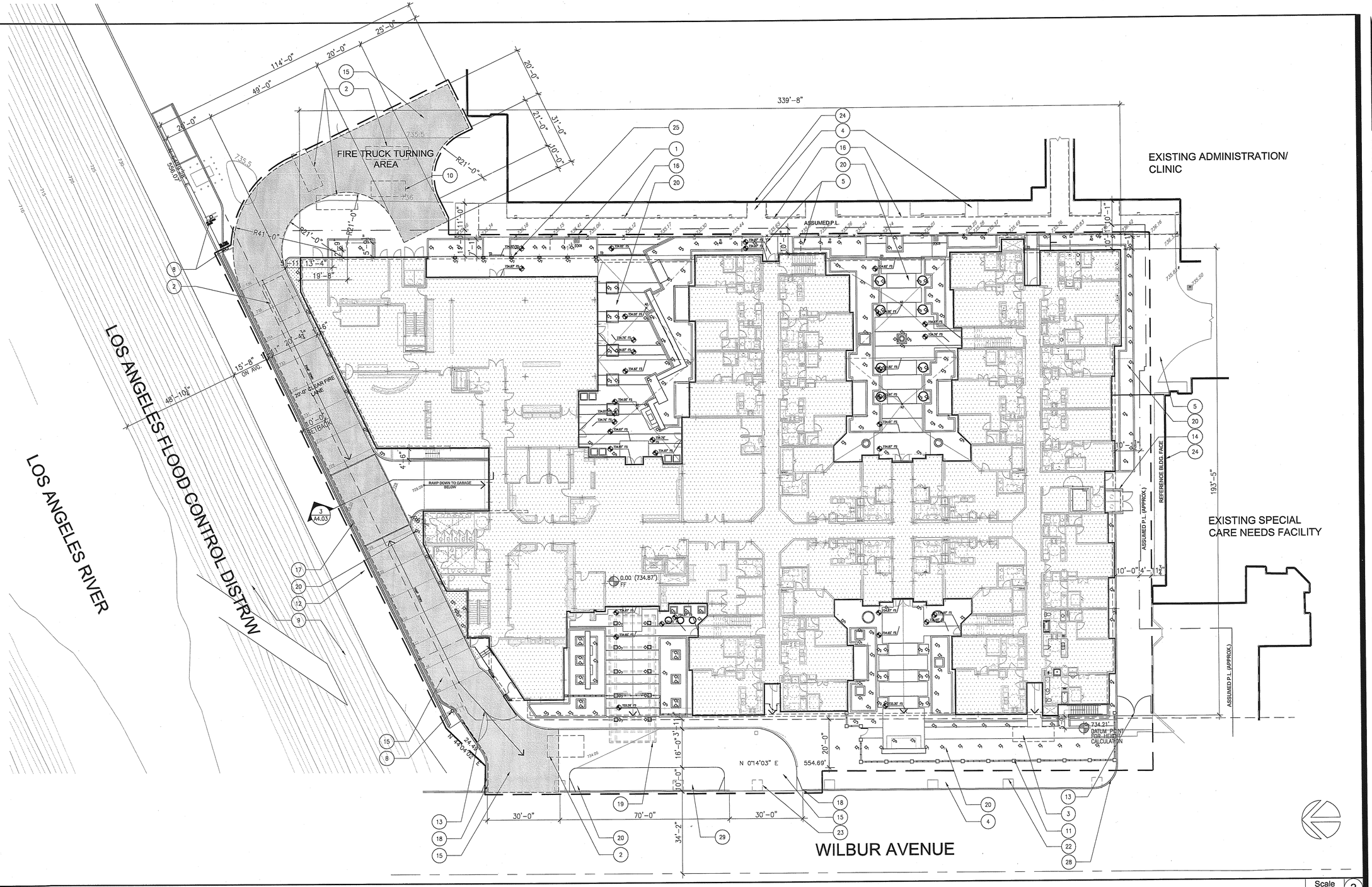

SITE PLAN

Scale 1/16"=1'-0" 2

1. BOUNDARY OF WORK
2. EXISTING ELECTRICAL EQUIPMENT TO BE RELOCATED
3. EXISTING MECHANICAL EQUIPMENT TO BE RELOCATED
4. EXISTING WALKWAY TO REMAIN
5. EXISTING WALKWAY TO BE DEMOLISHED
6. EXISTING ARCADE TO BE DEMOLISHED
7. EXISTING CANOPY TO BE DEMOLISHED
8. EXISTING POWER POLE
9. EXISITNG DRAINAGE CONTROL
10. EQUIPMENT TO BE REMOVED
11. NEW FENCE
12. NEW RETAINING WALL
13. NEW GATE
14. NEW TRASH ENCLOSURE
15. NEW PAVING
16. EXISTING ARCADE TO BE DEMOLISHED
17. NEW CURB
18. NEW CURBCUT
19. NEW CANOPY
20. NEW LANDSCAPE FEATURE, SEE LANDSCAPE DRAWINGS.
21. NEW HARDSCAPE, SEE ENLARGED PLANS
22. EXISTING TREEWELL, LANDSCAPE & TREES TO REMAIN
23. EXISTING TREEWELL & LANDSCAPE TO BE DEMOLISHED
24. EXISTING BUILDING
25. NEW ARCADE
26. EXISTING ARCADE TO BE DEMOLISHED
27. NEW CURB
28. NEW CURBCUT
29. NEW SIDEWALK
30.

KEYNOTES

Scale 9

SITE LIGHTING SCHEDULE

NOTE: SITE LIGHTING TO BE DESIGN-BUILT

SYMBOL	DESCRIPTION	MANUFACTURER	CATALOG NUMBER	LAMP TYPE	MAX. WATT	VOLTS
1	EXTERIOR INGRADE STAINLESS STEEL METAL HALIDE UPLIGHT	FC LIGHTING	FCD-VOLTS-39CMH G12-E-SS-SPVC	39CMH G12	39	TBD
2	EXTERIOR INGRADE STAINLESS STEEL METAL HALIDE UPLIGHT	FC LIGHTING	FCD-VOLTS-70CMH G12-E-SS-SPVC	70CMH G12	70	TBD
3	EXTERIOR METAL HALIDE BULLET LANDSCAPE UPLIGHT WITH HONEYCOMB LOUVER, WATERSHED LENS AND INGRADE BALLAST BOX	WINONA WINSCAPE	PA-71-VOLTS-L4-FINISH-FO-SH6-C1-B1-0-STD	35W CMH PAR20/FL30	35	TBD
4	EXTERIOR LOW VOLTAGE LANDSCAPE STEM STYLE FLOODLIGHT WITH 120 WINDOW AND INTEGRAL TRANSFORMER	WINONA WINSCAPE	GL-94-12V-FINISH-T4-S18-PM2-STD	35W T4 HALOGEN	35	12
5	EXTERIOR INGRADE METAL HALIDE UPLIGHT WITH STAINLESS STEEL TRIM AND LAMP ACCLUSION TECHNOLOGY	ERCO	33711.023	39W CMH T4	39	120
6	EXTERIOR LOW VOLTAGE UNDERWATER NICHE MOUNT FOUNTAIN LIGHT WITH HONEYCOMB LOUVER AND SPREAD LENS AND REMOTE TRANSFORMER	VISTA PROFESSIONAL	UW-2117-CSN-50WMR16-SL-HL	50W MR16	50	12
7	EXTERIOR COLUMN MOUNTED LOW VOLTAGE BULLET LIGHTS WITH REMOTE TRANSFORMER AND OR INTEGRAL POWER PACK AND HEXCELL LOUVER	WINONA WINSCAPE	GE-67-12-L3-FINISH-FO-SH6-C4-STD	50W MR16 10K HOUR	50	12
8	EXTERIOR METAL HALIDE WALL PACK WITH INTEGRAL PHOTOCELL	ECLIPSE	SM 829-MH-50-VOLTS-HPF-9206	50W MH	50	TBD
9	EXTERIOR METAL HALIDE LANDSCAPE BOLLARD	ERCO	33453.023	39W CMHT6 G12	39	120

Scale

TEXT

SITE GENERAL NOTES

Scale 1

WWC OT
Widom Wein Cohen O'Leary Terasawa

3130 Wilshire Boulevard
Sixth Floor
Santa Monica, California 90403
T (310) 828-0040
F (310) 453-9432
www.wwcot.com

Inland Empire
Palm Springs
Moorpark
Shanghai, China

RECEIVED
10:08 am, Aug 14, 2008
FRAMEMAX

Building Department Submittal: June 1, 2007
Issued For Bid:
Issued For Construction:

KEY PLAN

Project:
Jewish Home for The Aging
FOUNTAINVIEW AT EISENBERG VILLAGE
6440 Wilbur Ave
Reseda, CA. 91335

JEWISH HOME
JEWISH HOME FOR THE AGING
18855 Victory Blvd.
Reseda, CA 91335
Project Number: 04206.00

SITE PLAN

Date: 04/05/2007
Drawn By:
Checked By:

A1.02
Sheet No.

File Path & Name: F:\PROJECTS\04206-00\A-CD\SHEETS\A1.02.DWG
© WWCOT 2006 May 28, 2007 - 03:34 pm

RECEIVED BY SUFFOLK ON 06/01/07

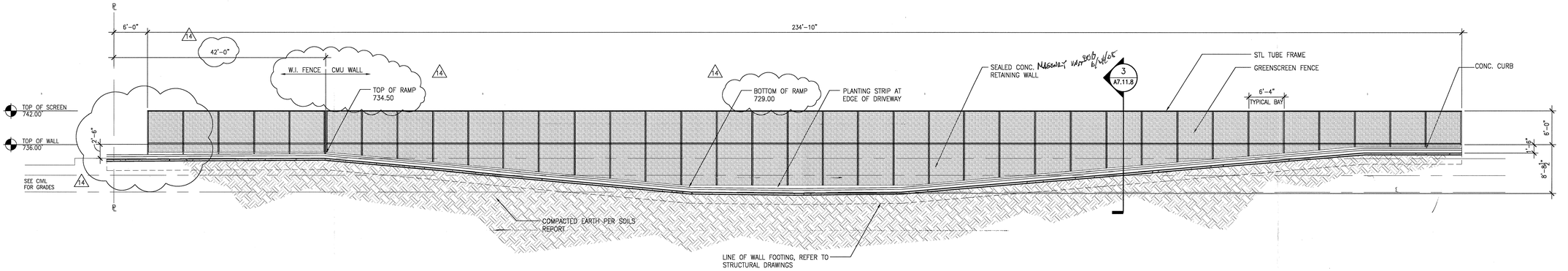

RETAINING WALL-ELEVATION — Scale 1/8" = 1'-0" — 4

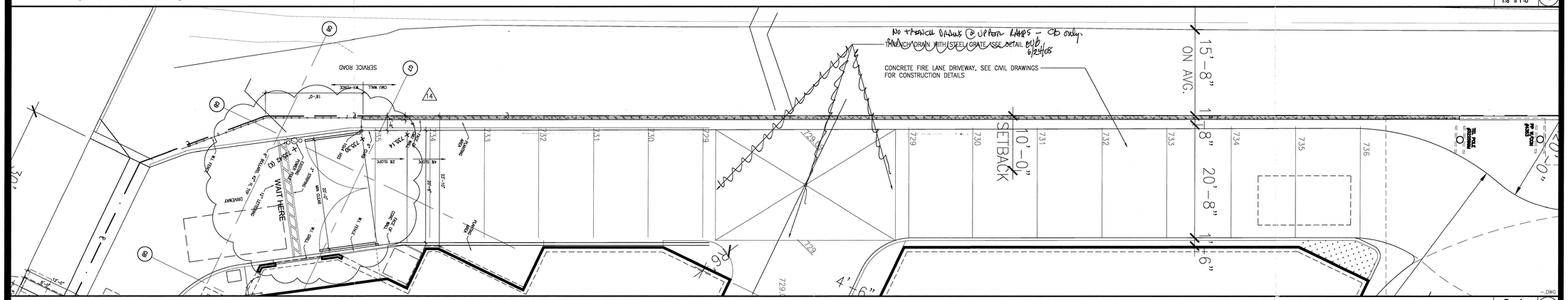

RETAINING WALL-PLAN — Scale 1/8" = 1'-0" — 3

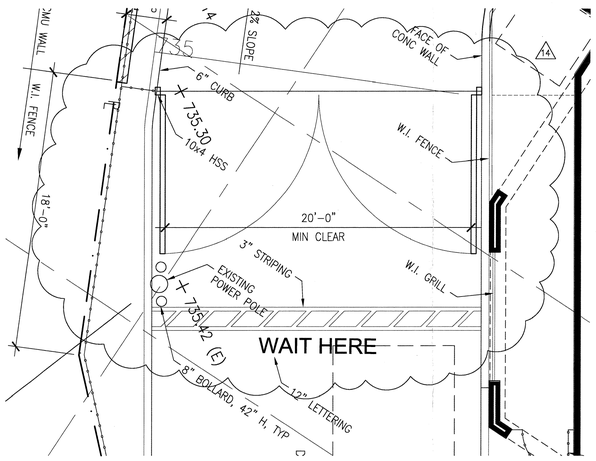

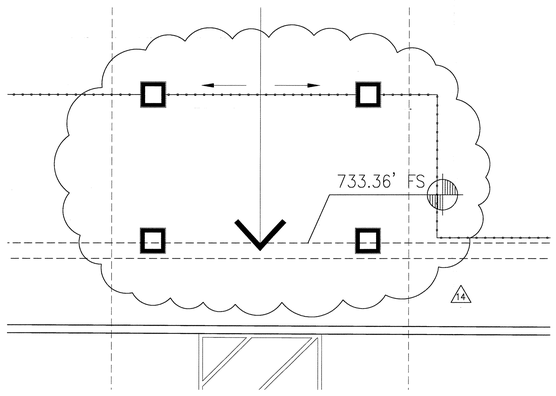

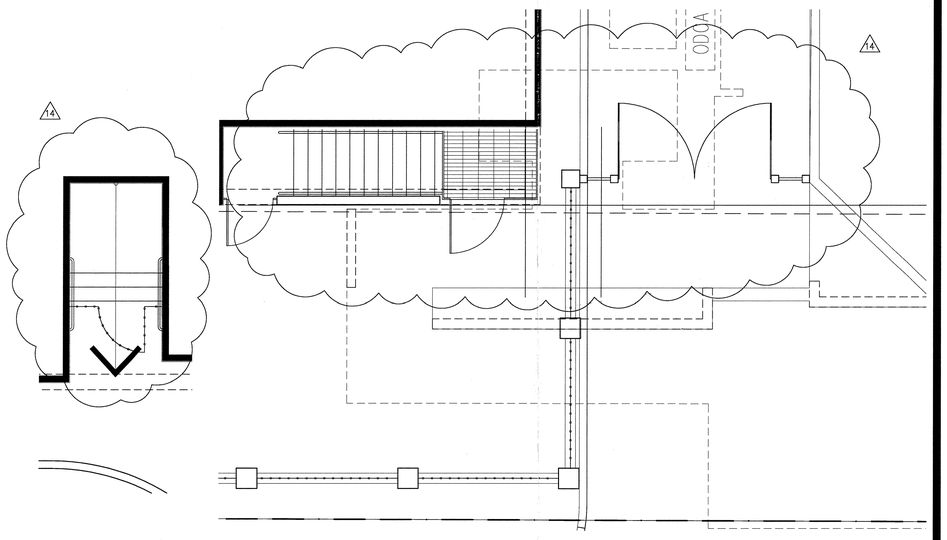

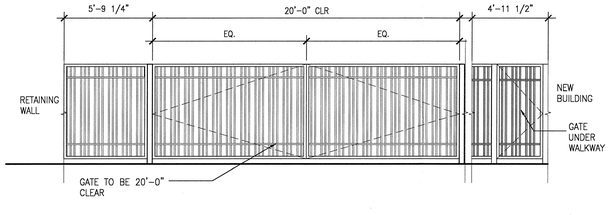

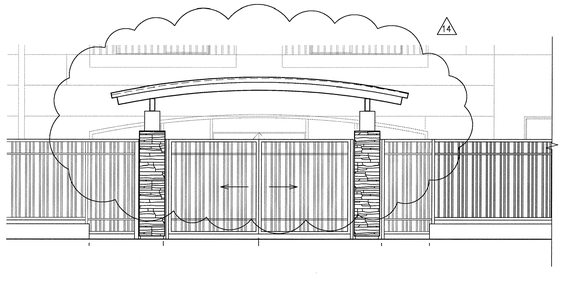

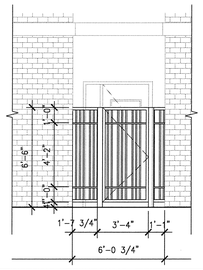

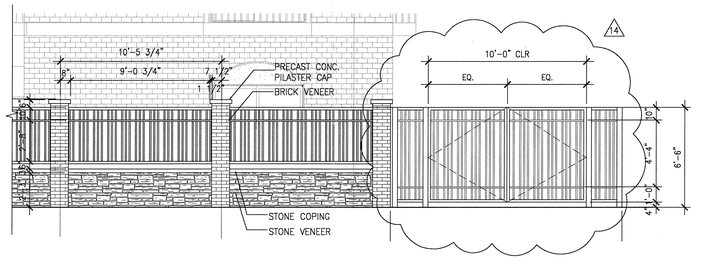

ELEVATION & SECTION — Scale 1/4"=1'-0" — 1

File Path & Name: F:\PROJECTS\04206-00\A-CD\SHEETS\A1.04.DWG
© WWCOT 2006 Jan 29, 2008 - 11:49 am

WWC OT
Widom Wein Cohen O'Leary Terasawa

3130 Wilshire Boulevard
Sixth Floor
Santa Monica, California 90403
T (310) 828-0040
F (310) 453-9432
www.wwcot.com

Inland Empire
Palm Springs
Moorpark
Shanghai, China

RECEIVED
10:08 am, Aug 14, 2008
FRAMEMAX

Building Department
Submittal: June 1, 2007
Issued For Bid: _____
Issued For
Construction: January 29, 2008

1/4 06-13-2008 FENCE, GATE AND CANOPY REVISIONS

KEY PLAN

Project:
Jewish Home for The Aging
FOUNTAINVIEW AT EISENBERG VILLAGE
6440 Wilbur Ave
Reseda, CA. 91335

JEWISH HOME
JEWISH HOME FOR THE AGING
18855 Victory Blvd.
Reseda, CA 91335
Project Number: 04206.00

SITE FEATURES
RETAINING WALL

Date: 01/21/2008
Drawn By: _____
Checked By: _____

A1.04
Sheet No.

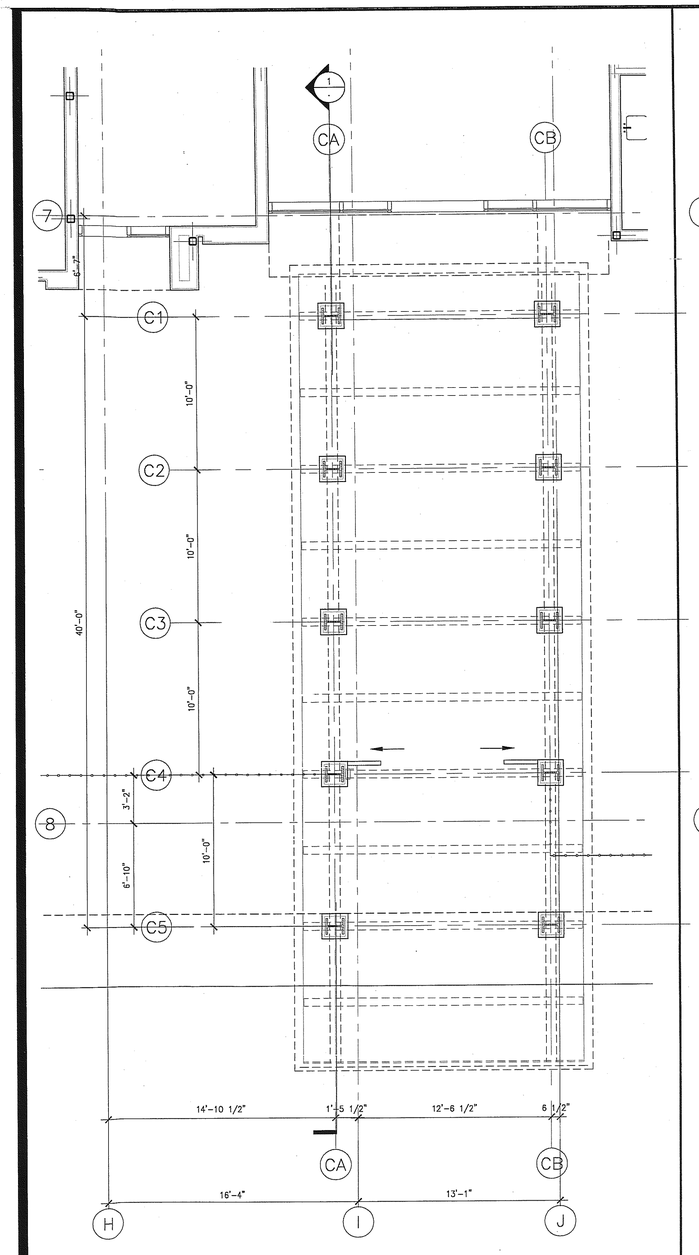

ENTRANCE CANOPY PLAN — Scale 1/8" = 1'-0" — 18

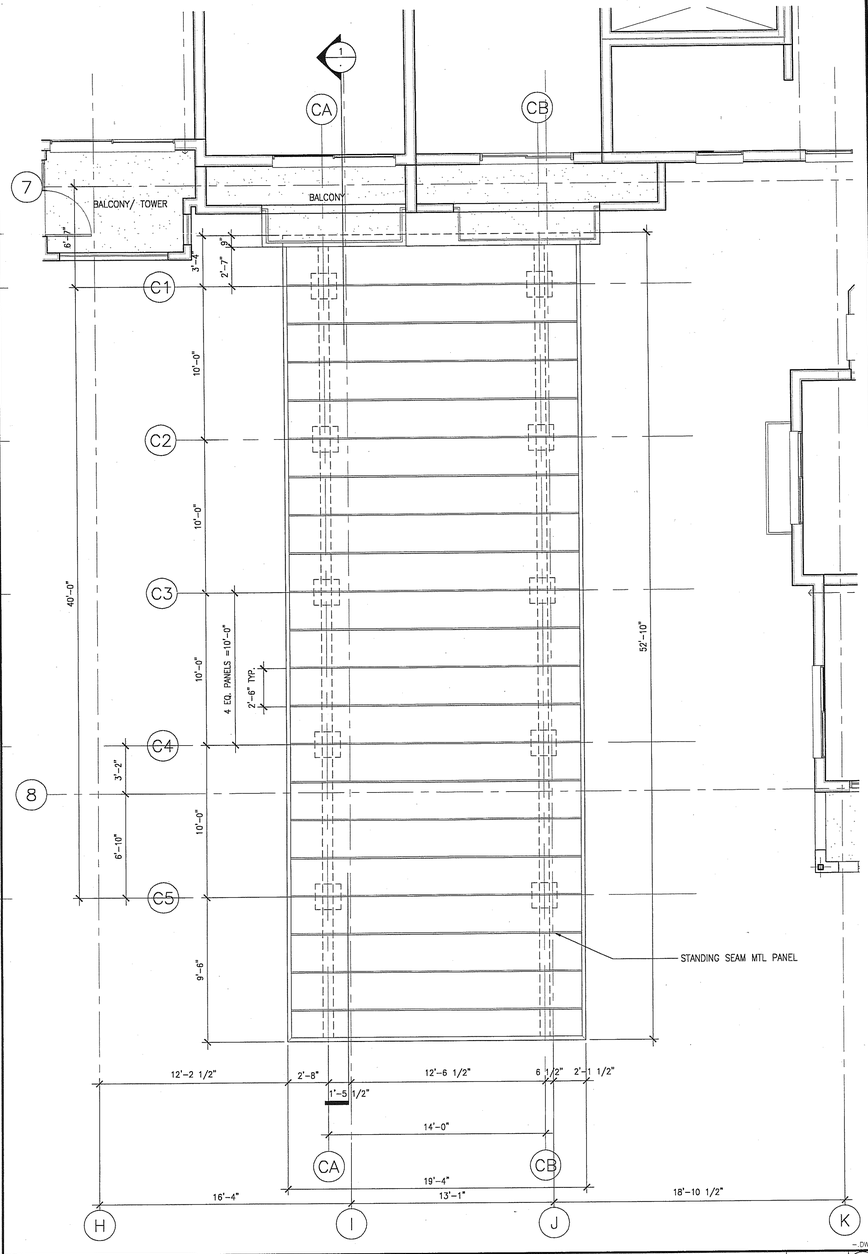

ENTRANCE CANOPY PLAN- ROOF — Scale 1/4" = 1'-0" — 10

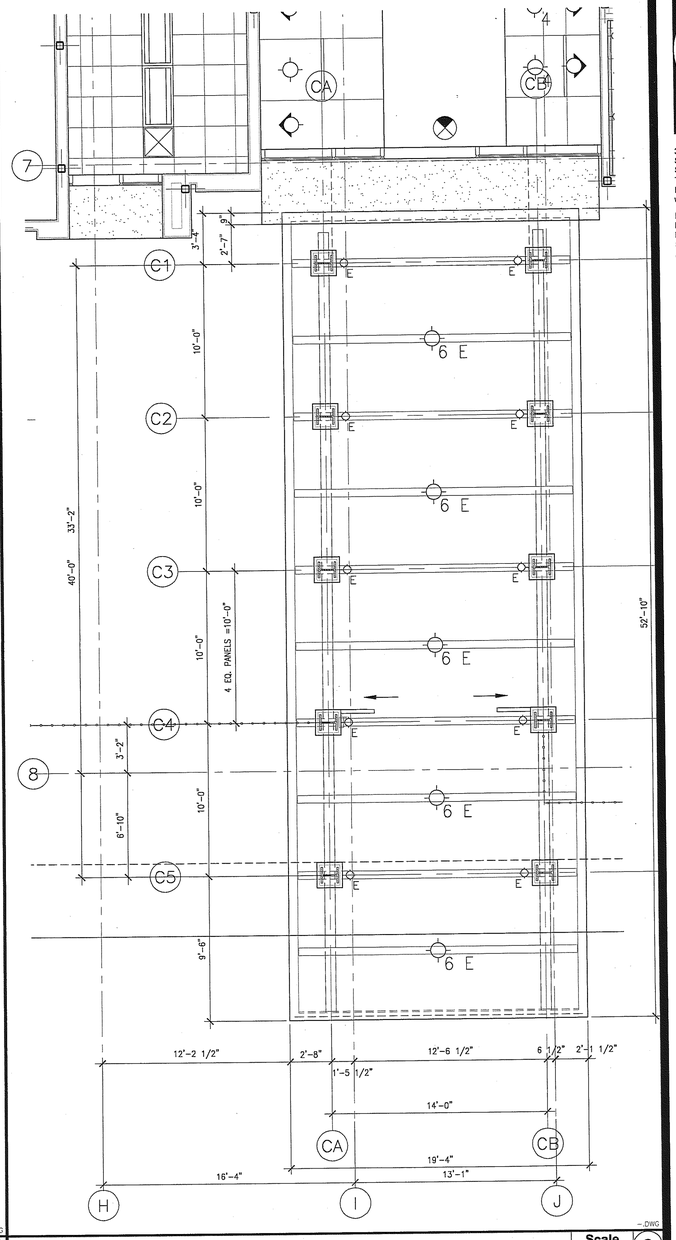

CANOPY-REFLECTED CEILING PLAN — Scale 1/4" = 1'-0" — 2



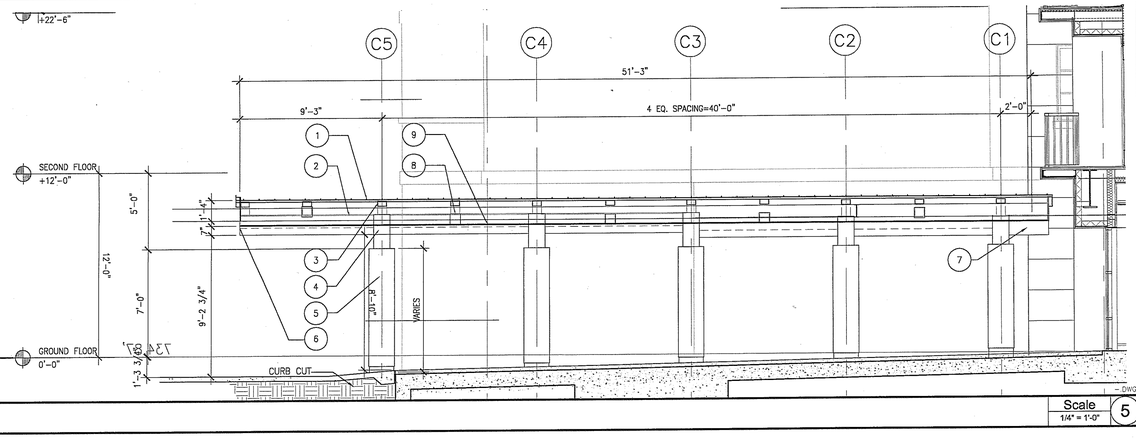

ELEVATION & SECTION — Scale 1/4" = 1'-0" — 5

1. STANDING SEAM METAL PANEL
2. STL. BEAM
3. TUBE STEEL
4. STL COLUMN
5. STONE CLADDING
6. MTL. FASCIA
7. MTL. CANOPY
8. EXTERIOR LIGHT FIXTURE, SEE ELECTRICAL DRAWINGS FOR TYPE
9. PLASTER SOFFIT

KEYNOTE — Scale 1/4" = 1'-0" — 1

WWC OT
Widom Wein Cohen O'Leary Terasawa
3130 Wilshire Boulevard
Sixth Floor
Santa Monica, California 90403
T (310) 828-0040
F (310) 453-9432
www.wwcot.com
Inland Empire
Palm Springs
Moorpark
Shanghai, China

RECEIVED
10:08 am, Aug 14, 2008
FRAMEMAX

Building Department Submittal: June 1, 2007
Issued For Bid:
Issued For Construction:

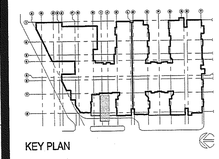

KEY PLAN

Project:
Jewish Home for The Aging
FOUNTAINVIEW AT EISENBERG VILLAGE
6440 Wilbur Ave
Reseda, CA. 91335

JEWISH HOME
JEWISH HOME FOR THE AGING
18855 Victory Blvd.
Reseda, CA 91335
Project Number: 04206.00

ENTRANCE CANOPY PLAN, SECTION & ELEVATION

Date: 04/05/2007
Drawn By:
Checked By:

A1.05
Sheet No.

File Path & Name: F:\PROJECTS\04206-00\A-CD\SHEETS\A1.05.DWG
© WWCOT 2006 May 28, 2007 - 03:35 pm

RECEIVED BY SUFFOLK ON 06/01/07

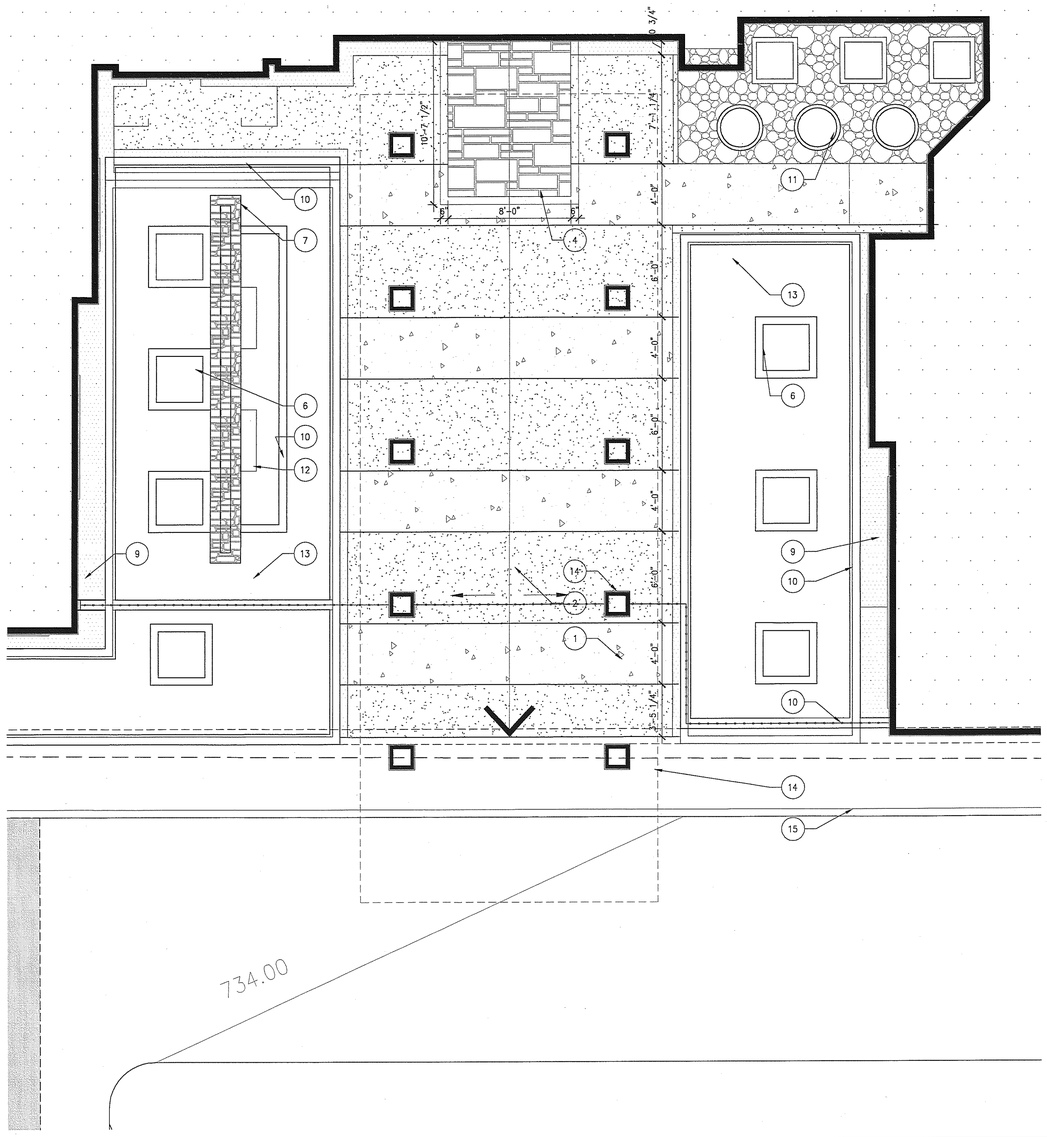

ENLARGED SOUTH-WEST COURTYARD

Scale 1/4" = 1'-0" (14)

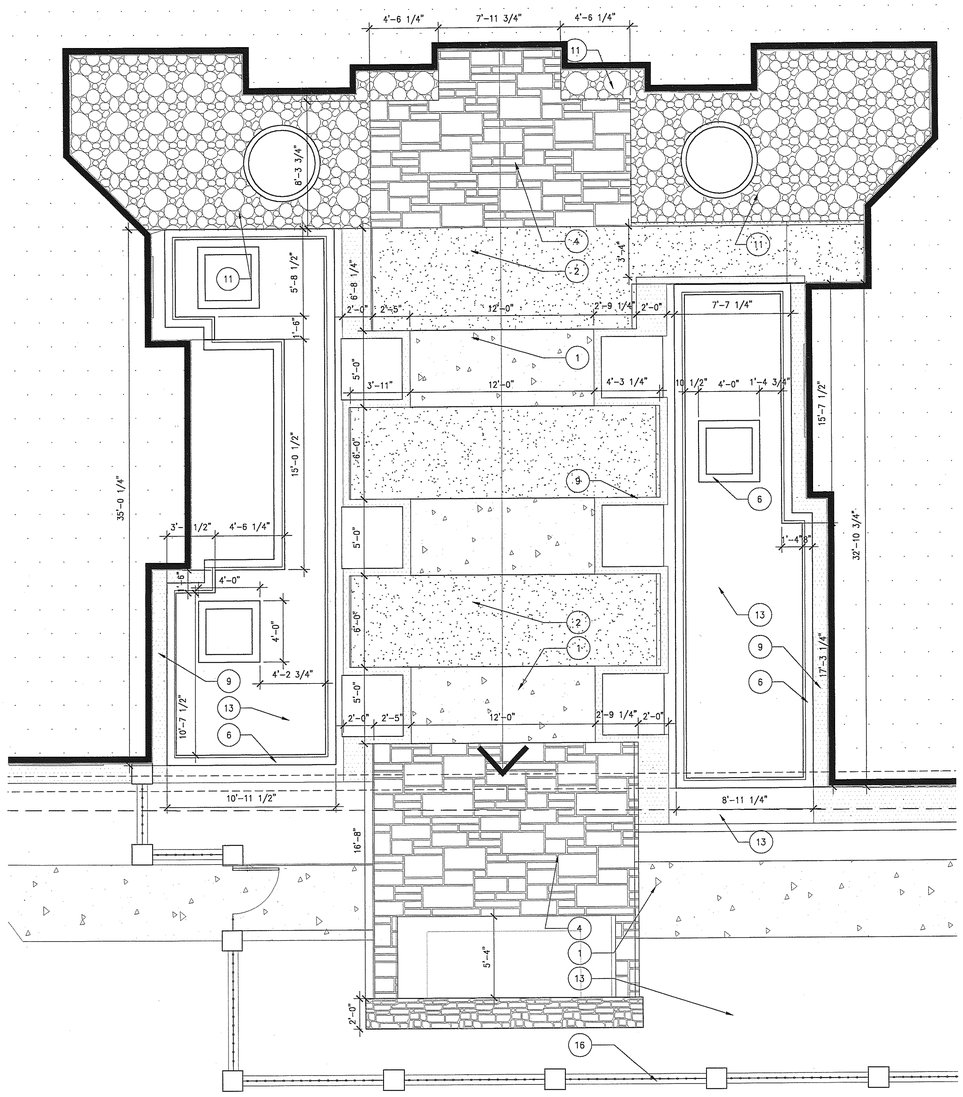

ENLARGED SOUTH-WEST COURTYARD

Scale 1/4" = 1'-0" (2)

LEGEND

Scale (13)

1. CONC. PAVING: ACID ETCHED FINISH, SEE LANDSCAPE DWGS
2. CONC. PAVING: HEAVY BLAST, SEE LANDSCAPE DWGS
3A. CONC. PAVING: NATURAL GRAY FINISH, SEE LANDSCAPE DWGS
3B. VEHICULAR CONC. PAVING: NATURAL GRAY FINISH, SEE LANDSCAPE DWGS
4. STONE PAVING
5. PLANTERS
6. CAST IN PLACE CONC. PLANTER WALL
7. STONE WALL
8. FIRE PLACE
9. GRAVEL MAINTENANCE STRIP, SEE LANDSCAPE
10. PLANTER WALL
11. COBBLE STONE
12. WATER FEATURE
13. PLANTING AREA
14. ENTRANCE AWNING STRUCTURE
15. CONCRETE CURB
16. FENCE

PLAN NOTES

Scale 1/4" = 1'-0" (1)

WWC OT
Widom Wein Cohen O'Leary Terasawa

3130 Wilshire Boulevard
Sixth Floor
Santa Monica, California 90403
T (310) 828-0040
F (310) 453-9432
www.wwcot.com

Inland Empire
Palm Springs
Moorpark
Shanghai, China

RECEIVED
10:08 am, Aug 14, 2008
FRAMEMAX

Building Department Submittal: June 1, 2007
Issued For Bid:
Issued For Construction:

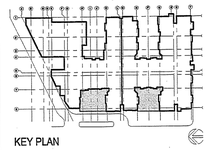

KEY PLAN

Project:
Jewish Home for The Aging
FOUNTAINVIEW AT EISENBERG VILLAGE

6440 Wilbur Ave
Reseda, CA. 91335

JEWISH HOME
JEWISH HOME FOR THE AGING
18855 Victory Blvd.
Reseda, CA 91335

Project Number: 04206.00

ENLARGED COURT-YARDS PLANS

Date: 04/05/2007
Drawn By:
Checked By:

A1.06
Sheet No.

File Path & Name: F:\PROJECTS\04206-00\A-CD\SHEETS\A1.06.DWG
© WWCOT 2006 May 28, 2007 - 03:35 pm

RECEIVED BY SUFFOLK ON 06/01/07

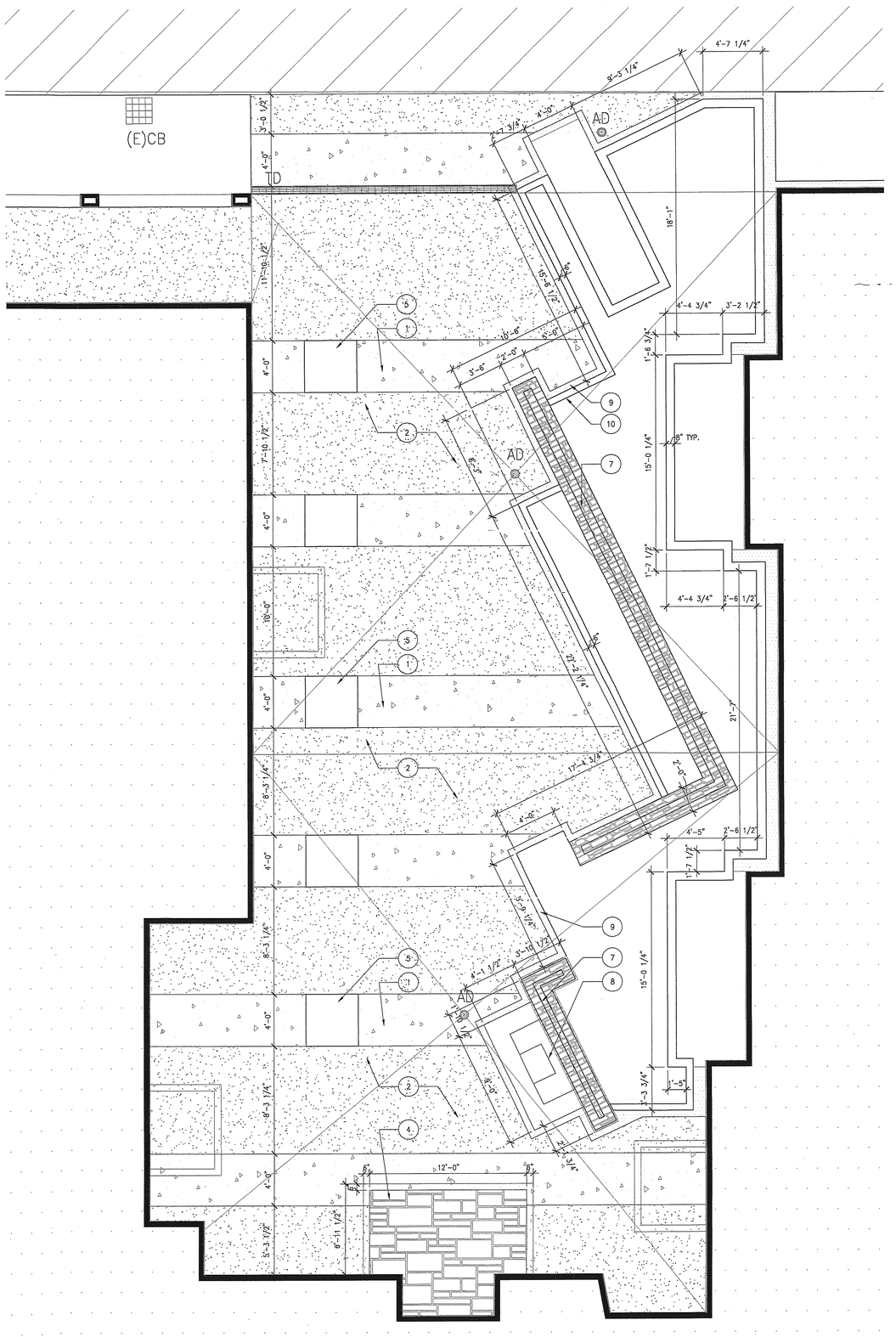

SEE KEY NOTES ON A1.06

ENLARGED NORTH-EAST COURTYARD (MAIN ENTRY)

Scale 1/4" = 1'-0"

13

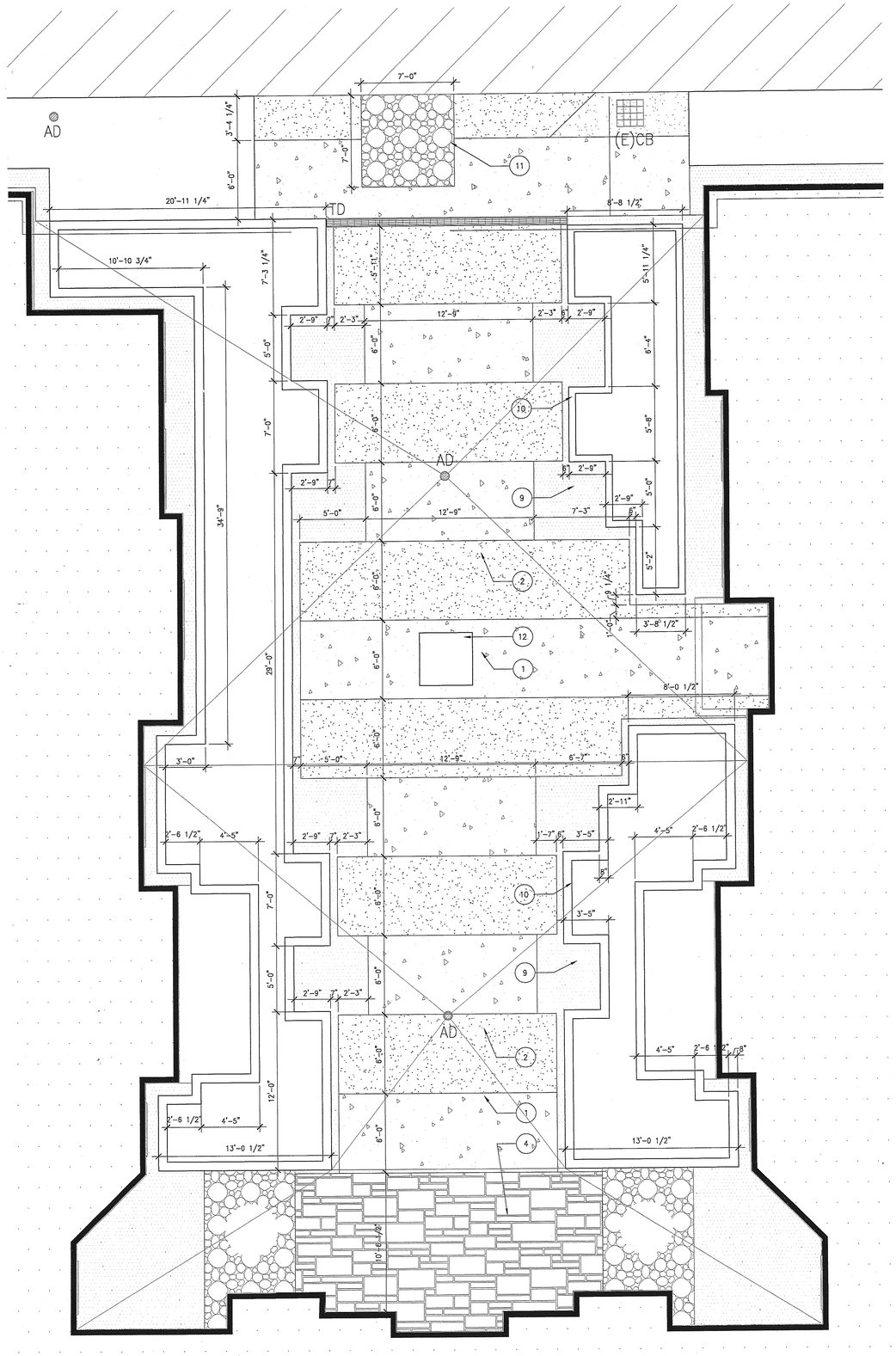

SEE KEY NOTES ON A1.06

ENLARGED SOUTH-EAST COURTYARD

Scale 1/4" = 1'-0"

1

File Path & Name: F:\PROJECTS\04206.00\A-CD\SHEETS\A1.07.DWG
© WWCOT 2006 May 28, 2007 - 03:56 pm

WWC OT
Widom Wein Cohen O'Leary Terasawa

3130 Wilshire Boulevard
Sixth Floor
Santa Monica, California 90403
T (310) 828-0040
F (310) 453-9432
www.wwcot.com

Inland Empire
Palm Springs
Moorpark
Shanghai, China

RECEIVED
10:08 am, Aug 14, 2008
FRAMEMAX

Building Department Submittal: June 1, 2007
Issued For Bid:
Issued For Construction:

KEY PLAN

Project:
Jewish Home for The Aging
FOUNTAINVIEW AT RISENBERG VILLAGE
6440 Wilbur Ave
Reseda, CA. 91335

JEWISH HOME
JEWISH HOME FOR THE AGING
18855 Victory Blvd.
Reseda, CA 91335
Project Number: 04206.00

ENLARGED COURT-YARDS PLANS

Date: 04/05/2007
Drawn By:
Checked By:

A1.07
Sheet No.

RECEIVED BY SUFFOLK ON 06/01/07

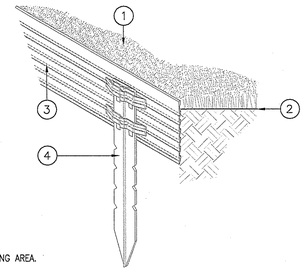

LEGEND

1. TURF OR PLANTING AREA.
2. FINISH GRADE.
3. METAL EDGING.
4. ALUMINUM STAKE. SECURE STAKE 1/2" BELOW TOP OF EDGING.

NOTES

A. SECURE STAKE INSIDE GRAVEL, GROUND COVER, OR DG.
B. EDGING TO BE NO MORE THAN 1/2" ABOVE FINISH GRADE.
C. COMPACT GRADE ADJACENT TO EDGING TO PREVENT SETTLING.

—.DWG

METAL EDGING

Scale NTS — 20

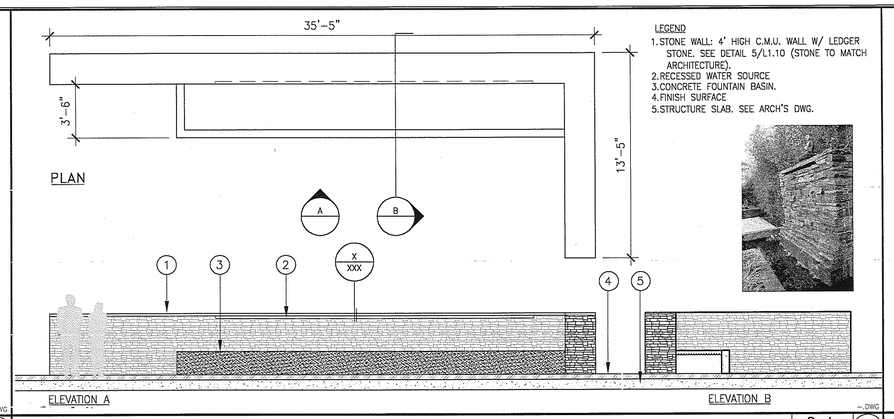

LEGEND

1. STONE WALL: 4' HIGH C.M.U. WALL W/ LEDGER STONE. SEE DETAIL 5/L1.10 (STONE TO MATCH ARCHITECTURE).
2. RECESSED WATER SOURCE
3. CONCRETE FOUNTAIN BASIN.
4. FINISH SURFACE
5. STRUCTURE SLAB. SEE ARCH'S DWG.

—.DWG

WATER FEATURE A

Scale 1/4" = 1'-0" — 12

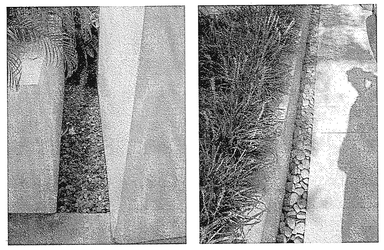

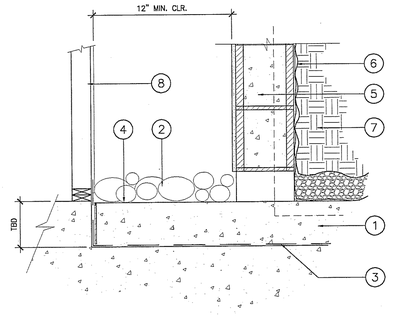

1. TOPPING SLAB, SLOPE TO REMAIN.
2. GRAVEL STONE.
3. WATERPROOF MEMBRANE SYSTEM.
4. TOP OF STRUCTURAL SLAB. SLOPE TO DRAIN.
5. CMU WALL, SEE SLAB PLAN
6. FILTER CLOTH.
7. PLANTER SOIL.
8. WALL/BUILDING

SEE 7/G2.09 FOR DRAIN

—.DWG

GRAVEL MAINTENANCE STRIP

Scale 1" = 1'-0" — 4

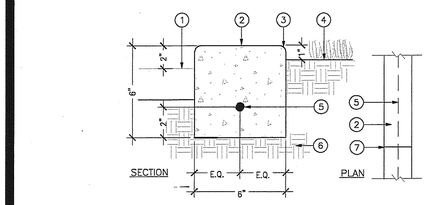

LEGEND

1. FINISH SURFACE, ADJACENT STONE PAVING.
2. CONCRETE MOWSTRIP, SMOOTH TROWEL FINISH.
3. 1/4" RADIUS TOOLED EDGE.
4. FINISH GRADE IN PLANTING AREA.
5. #3 REBAR, CONTINUOUS.
6. COMPACTED SUBGRADE (90%).
7. SCORE JOINT @ 10' O.C., TYPICAL.

—.DWG

CONCRETE BAND

Scale 3" = 1'-0" — 19

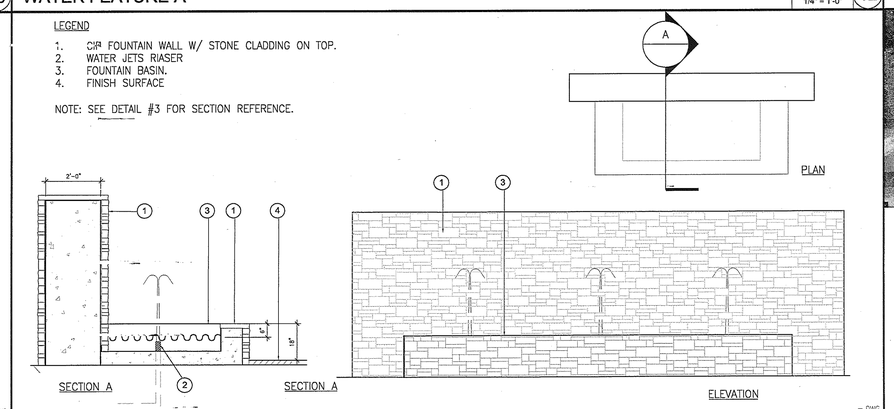

—.DWG

WATER FEATURE B

Scale 1/2" = 1'-0" — 11

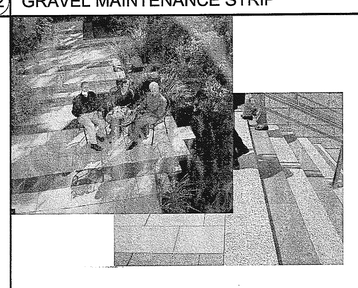

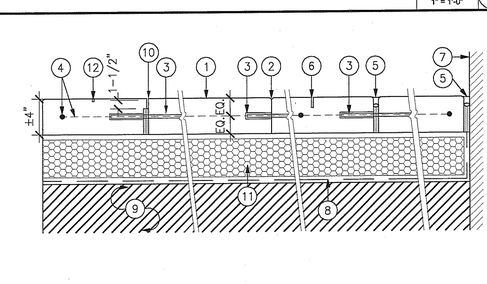

1. CONCRETE PAVING – FINISH PER PLAN. WHERE AGGREGATE IS EXPOSED, PROVIDE SAMPLE OF AGGREGATE FOR APPROVAL.
2. COLD JOINT SEE DETAIL 4C, THIS SHEET.
3. #4 REBAR x 12" LONG W/ 'SPEED DOWEL' SYSTEM @ 24" O.C. SPEED DOWEL AVAILABLE FROM AZTEC CONCRETE ACCESSORIES, INC. (800) 773-6935. INSTALL PER MANUFACTURER'S DETAILS.
4. #4 REBAR @ 24" O.C. BOTH WAYS.
5. EXPANSION JOINT – PER ARCH.
6. TYPICAL SAWCUT JOINT – SEE DETAIL 4D, THIS SHEET.
7. BUILDING FACE OR VERTICAL SURFACE.
8. WATERPROOF MEMBRANE AND DRAINAGE MAT PER WATERPROOFING CONSULTANT.
9. STRUCTURAL SLAB – SEE STRUCTURAL DRAWINGS.
10. COMBINATION SAWCUT/EXPANSION JOINT – SEE DETAIL 4A, THIS SHEET.
11. FILL – SEE ARCHITECTURAL DRAWINGS.
12. SHALLOW SAWCUT – SEE DETAIL 4E, THIS SHEET.

NOTE: PROVIDE SAMPLES PER SPECIFICATIONS.

—.DWG

CONC. PAVING ON STRUCTURAL SLAB

Scale 1" = 1'-0" — 3

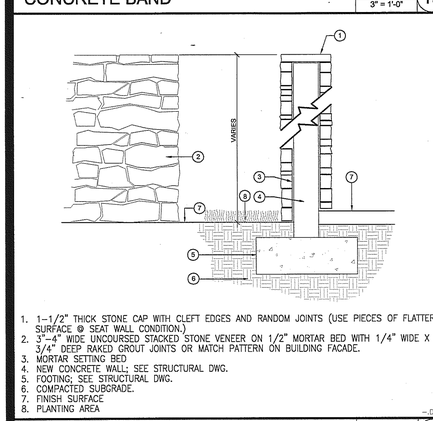

1. 1-1/2" THICK STONE CAP WITH CLEFT EDGES AND RANDOM JOINTS (USE PIECES OF FLATTER SURFACE @ SEAT WALL CONDITION.)
2. 3"-4" WIDE UNCOURSED STACKED STONE VENEER ON 1/2" MORTAR BED WITH 1/4" WIDE X 3/4" DEEP RAKED GROUT JOINTS OR MATCH PATTERN ON BUILDING FACADE.
3. MORTAR SETTING BED
4. NEW CONCRETE WALL: SEE STRUCTURAL DWG.
5. FOOTING; SEE STRUCTURAL DWG.
6. COMPACTED SUBGRADE.
7. FINISH SURFACE
8. PLANTING AREA

—.DWG

STONE WALL

Scale 3/4" = 1'-0" — 18

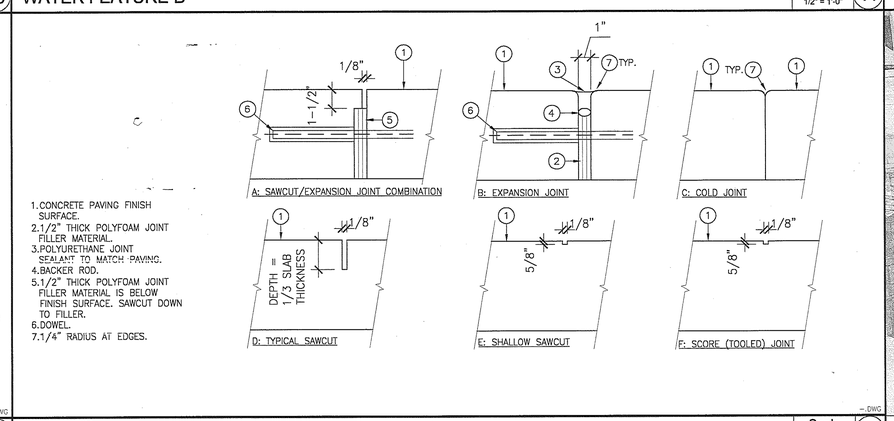

1. CONCRETE PAVING FINISH SURFACE.
2. 1/2" THICK POLYFOAM JOINT FILLER MATERIAL.
3. POLYURETHANE JOINT SEALANT TO MATCH PAVING.
4. BACKER ROD.
5. 1/2" THICK POLYFOAM JOINT FILLER MATERIAL IS BELOW FINISH SURFACE. SAWCUT DOWN TO FILLER.
6. DOWEL.
7. 1/4" RADIUS AT EDGES.

—.DWG

CONCRETE JOINTS

Scale NTS — 10

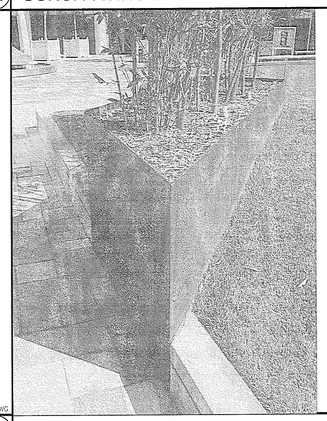

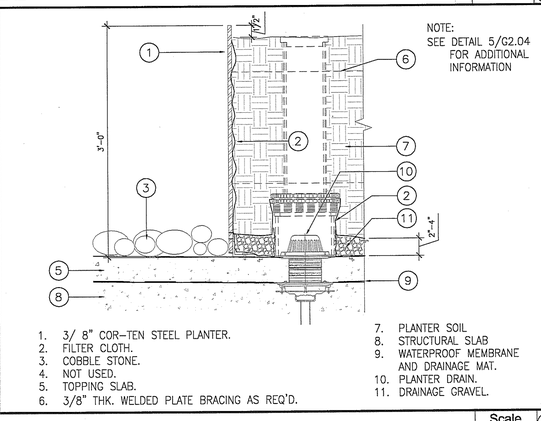

1. 3/ 8" COR-TEN STEEL PLANTER.
2. FILTER CLOTH.
3. COBBLE STONE.
4. NOT USED.
5. TOPPING SLAB.
6. 3/8" THK. WELDED PLATE BRACING AS REQ'D.
7. PLANTER SOIL
8. STRUCTURAL SLAB
9. WATERPROOF MEMBRANE AND DRAINAGE MAT.
10. PLANTER DRAIN.
11. DRAINAGE GRAVEL.

—.DWG

COR-TEN STEEL PLANTER

Scale 1" = 1'-0" — 2

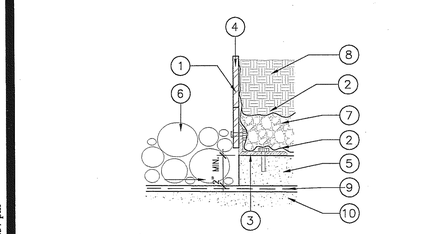

1. 3" X 6" BLOCK OUT @ 24" O.C. (BEYOND)
2. FILTER CLOTH.
3. 1/4" COR-TEN STEEL SUPPORT ANGLE, 2" X 3" @ ±48" O.C. WITH VERTICAL SLOT HOLE @ PLANTER FOR LEVELING AND ADJUSTMENT. SUBMIT SHOP DRAWINGS.
4. COR-TEN STEEL PLANTER.
5. TOPPING SLAB.
6. COBBLE STONE.
7. GRAVEL.
8. PLANTER SOIL.
9. WATERPROOF MEMBRANE AND DRAINAGE MAT PER ARCH.
10. STRUCTURAL SLAB.

—.DWG

COR-TEN SUPPORT

Scale 3" = 1'-0" — 17

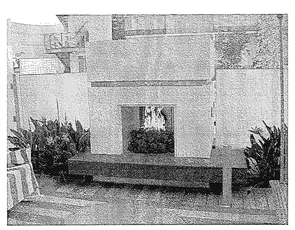

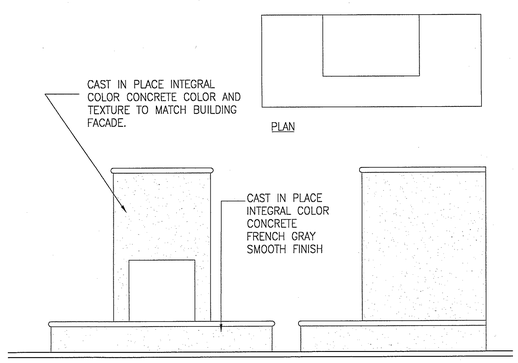

—.DWG

FIREPLACE

Scale NTS — 9

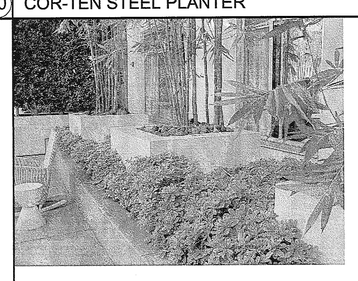

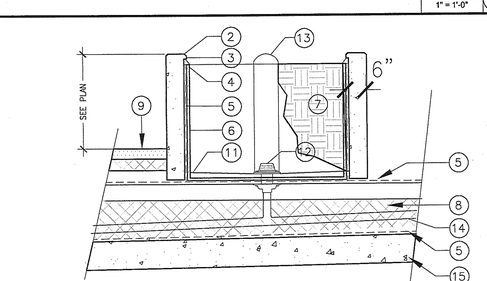

1. CAST-IN-PLACE CONCRETE PLANTER WALL.
2. ¾" CHAMFER EDGE.
3. 1" OVERHANG TO CONCEAL WATERPROOFING MEMBRANE.
4. FLASHING.
5. WATERPROOFING.
6. DRAINAGE MAT.
7. PLANTER BACKFILL.
8. GEO-FILL LIGHTWEIGHT STRUCTURAL FILL.
9. FINISH SURFACE OF ADJACENT.
10. NOT USED.
11. TOPPING SLAB SLOPED 1% TO DRAIN.
12. DUEL LEVEL ROOF DRAIN. SEE DETAIL 7/G2.04 FOR ADDITIONAL INFORMATION
13. DRAIN CLEANOUT WITH GRATE FOR SHRUB AND GROUNDCOVER PLANTING.
14. 3" DRAIN PIPE.
15. TOP OF DWP VAULT SLAB.

—.DWG

CONC PLANTER OVER STRUCTURE

Scale 1" = 1'-0" — 1

WWC OT
Widom Wein Cohen O'Leary Terasawa

3130 Wilshire Boulevard
Sixth Floor
Santa Monica, California 90403
T (310) 828-0040
F (310) 453-9432
www.wwcot.com

Inland Empire
Palm Springs
Moorpark
Shanghai, China

RECEIVED
10:08 am, Aug 14, 2008
FRAMEMAX

Building Department Submittal: June 1, 2007
Issued For Bid:
Issued For Construction:

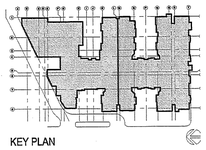

KEY PLAN

Project:
Jewish Home for The Aging
FOUNTAINVIEW AT EISENBERG VILLAGE

6440 Wilbur Ave
Reseda, CA. 91335

JEWISH HOME FOR THE AGING
18855 Victory Blvd.
Reseda, CA 91335

Project Number: 04206.00

HARDSCAPE DETAIL

Date: 04/05/2007
Drawn By:
Checked By:

A1.08
Sheet No.

File Path & Name: F:\PROJECTS\04206-00\A-CD\SHEETS\A1.08.DWG
© WWCOT 2006 May 28, 2007 - 03:37 pm

RECEIVED BY SUFFOLK ON 06/01/07

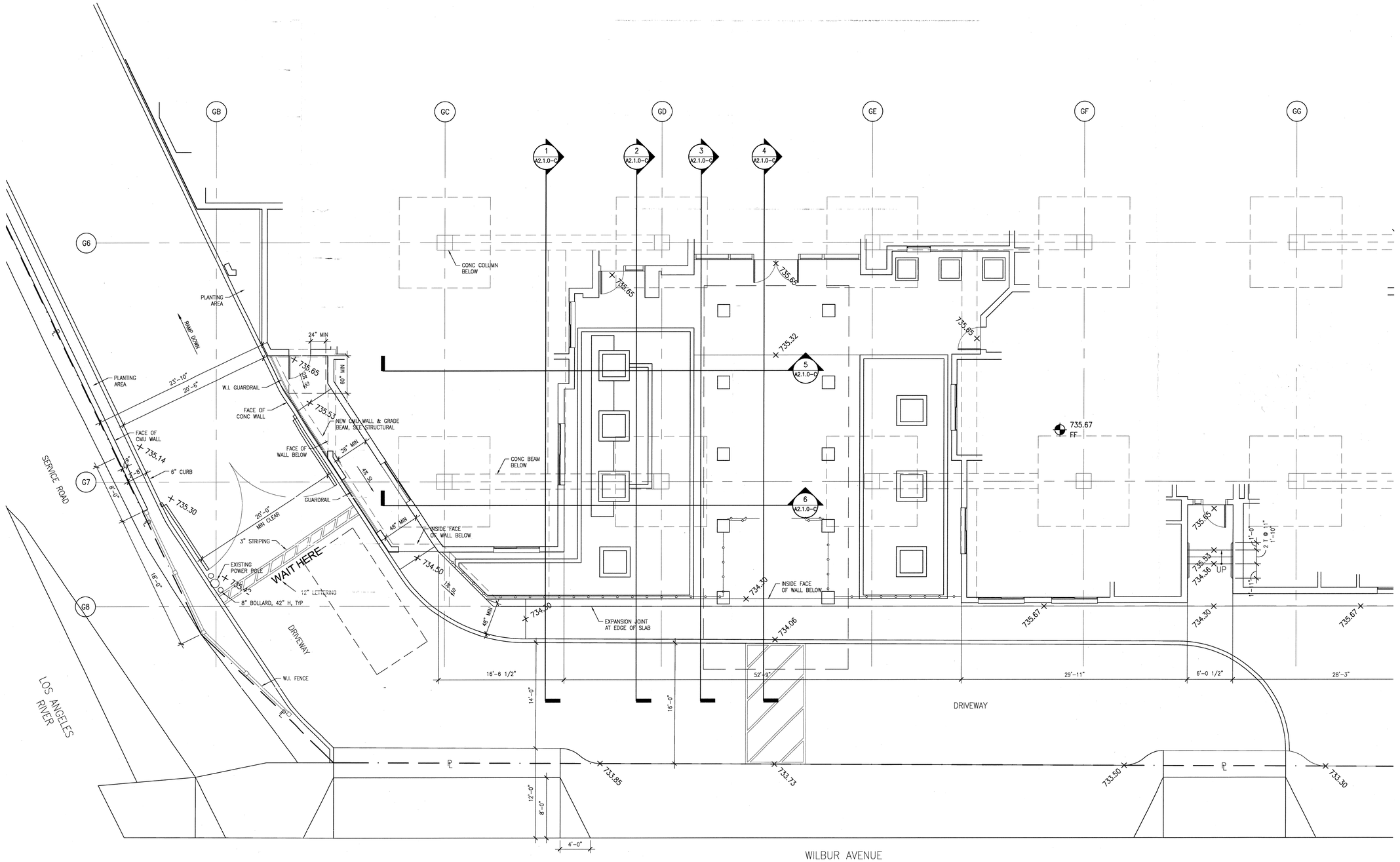

SITE GRADING PLAN

Scale 3/16" = 1'-0" (1)

WWC OT
Widom Wein Cohen O'Leary Terasawa

3130 Wilshire Boulevard
Sixth Floor
Santa Monica, California 90403
T (310) 828-0040
F (310) 453-9432
www.wwcot.com

Inland Empire
Palm Springs
Moorpark
Shanghai, China

RECEIVED
10:08 am, Aug 14, 2008
FRAMEMAX

Building Department Submittal: June 1, 2007
Issued For Bid:
Issued For Construction: January 29, 2008

2 06-22-2008 BULLETIN #22

RECEIVED
JUL 2 1 2009
SUFFOLK CONSTRUCTION

KEY PLAN

Project:
Jewish Home for The Aging
FOUNTAINVIEW AT EISENBERG VILLAGE
6440 Wilbur Ave
Reseda, CA. 91335

JEWISH HOME
JEWISH HOME FOR THE AGING
18855 Victory Blvd.
Reseda, CA 91335
Project Number: 04206.00

ENLARGED SITE GRADING PLAN

Date: 01/21/2008
Drawn By:
Checked By:

A1.09A
Sheet No.

File Path & Name: F:\PROJECTS\04206.00\A-CD\SHEETS\A1.09.DWG
© WWCOT 2006 Jul 21, 2008 - 04:53 pm

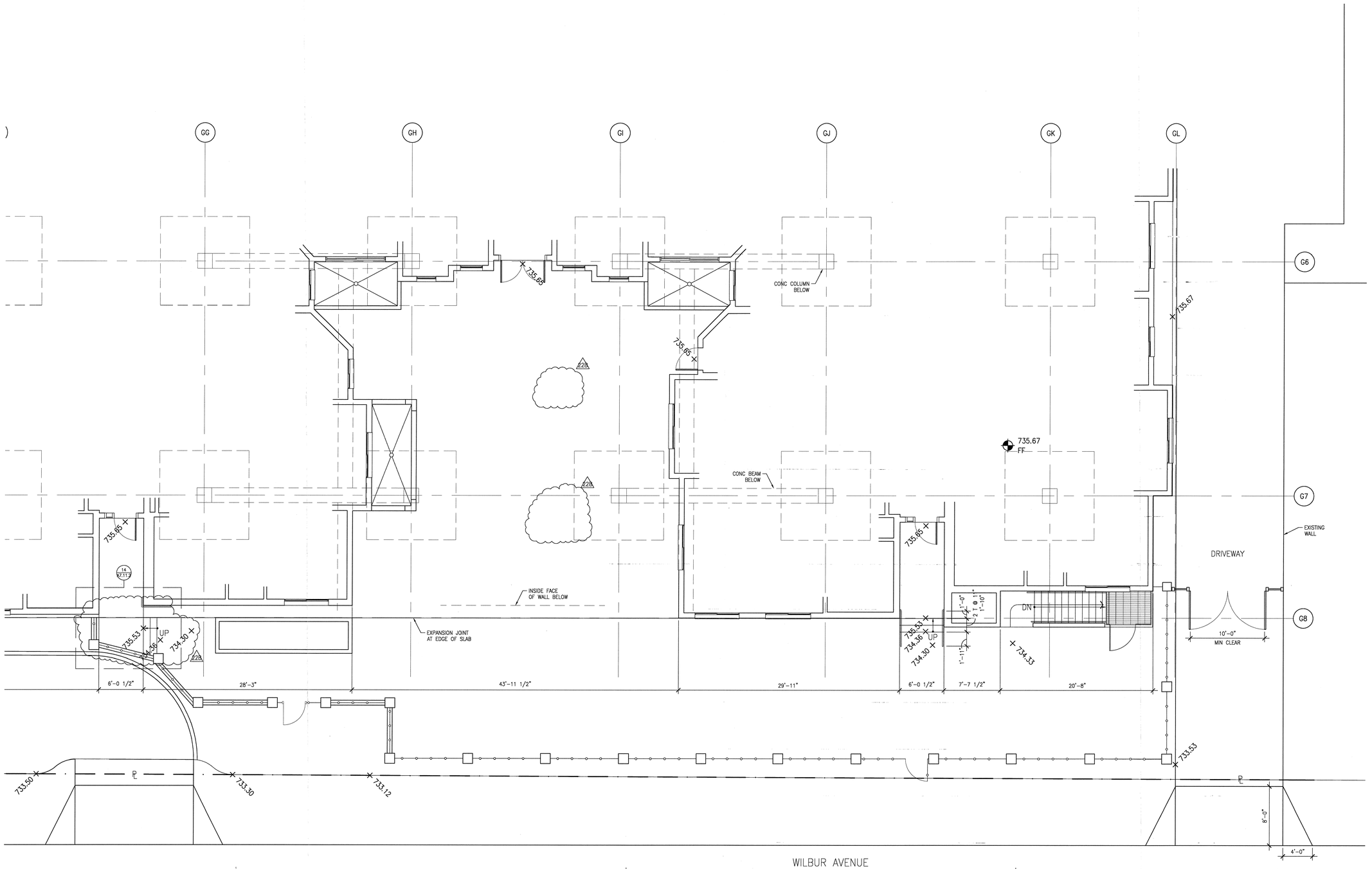

SITE GRADING PLAN

Scale 3/16" = 1'-0"

1

WWC OT
Widom Wein Cohen O'Leary Terasawa

3130 Wilshire Boulevard
Sixth Floor
Santa Monica, California 90403
T (310) 828-0040
F (310) 453-9432
www.wwcot.com

Inland Empire
Palm Springs
Moorpark
Shanghai, China

RECEIVED
10:08 am, Aug 14, 2008
FRAMEMAX

Building Department Submittal: June 1, 2007
Issued For Bid:
Issued For Construction: January 29, 2008

2 08-07-08 SW COURTYARD & CORRIDOR EXIT STAIR REVISIONS

KEY PLAN

RECEIVED
AUG 08 2008
SUFFOLK CONSTRUCTION

Project:
Jewish Home for The Aging
FOUNTAINVIEW AT EISENBERG VILLAGE
6440 Wilbur Ave
Reseda, CA. 91335

JEWISH HOME FOR THE AGING
18855 Victory Blvd.
Reseda, CA 91335
Project Number: 04206.00

ENLARGED SITE GRADING PLAN

Date: 01/21/2008
Drawn By:
Checked By:

A1.09B
Sheet No.

File Path & Name: F:\PROJECTS\04206-00\A-CD\SHEETS\A1.09.DWG
© WWCOT 2006 Aug 07, 2008 - 03:08 pm

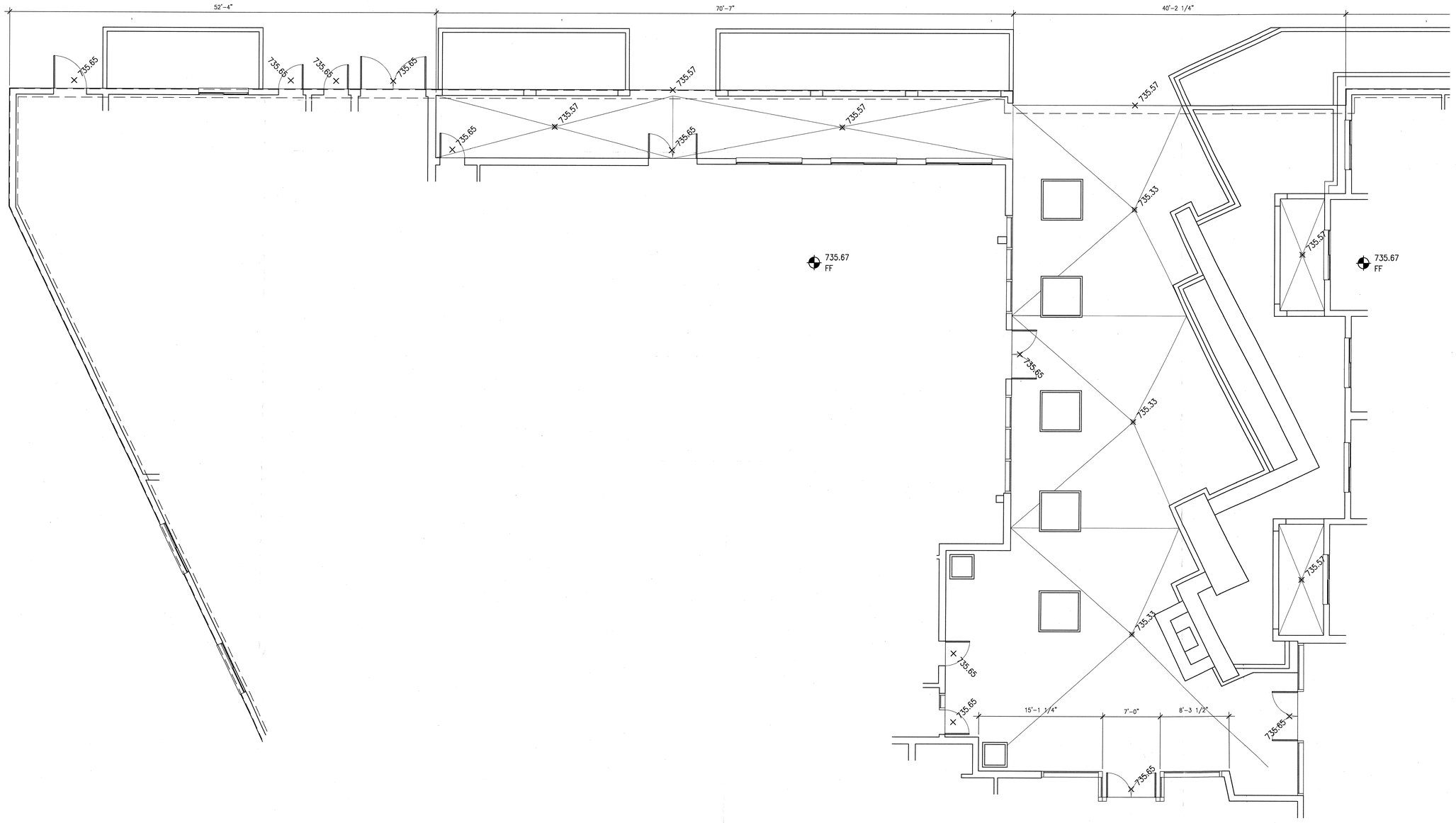

SITE GRADING PLAN

Scale 3/16" = 1'-0"

1

File Path & Name: F:\PROJECTS\04206-00\A-CD\SHEETS\A1.10.DWG
© WWCOT 2006 Jul 21, 2008 - 01:34 pm

WWC OT
Widom Wein Cohen O'Leary Terasawa

3130 Wilshire Boulevard
Sixth Floor
Santa Monica, California 90403
T (310) 828-0040
F (310) 453-9432
www.wwcot.com

Inland Empire
Palm Springs
Moorpark
Shanghai, China

RECEIVED
10:08 am, Aug 14, 2008
FRAMEMAX

Building Department Submittal: June 1, 2007
Issued For Bid: ———
Issued For Construction: January 29, 2008

RECEIVED
JUL 21 2008
SUFFOLK CONSTRUCTION

Bulletin # #22A

KEY PLAN

Project:
Jewish Home for The Aging
FOUNTAINVIEW AT EISENBERG VILLAGE
6440 Wilbur Ave
Reseda, CA. 91335

JEWISH HOME
JEWISH HOME FOR THE AGING
18855 Victory Blvd.
Reseda, CA 91335
Project Number: 04206.00

ENLARGED SITE GRADING PLAN

Date: 01/21/2008
Drawn By: ———
Checked By: ———

A1.10A
Sheet No.

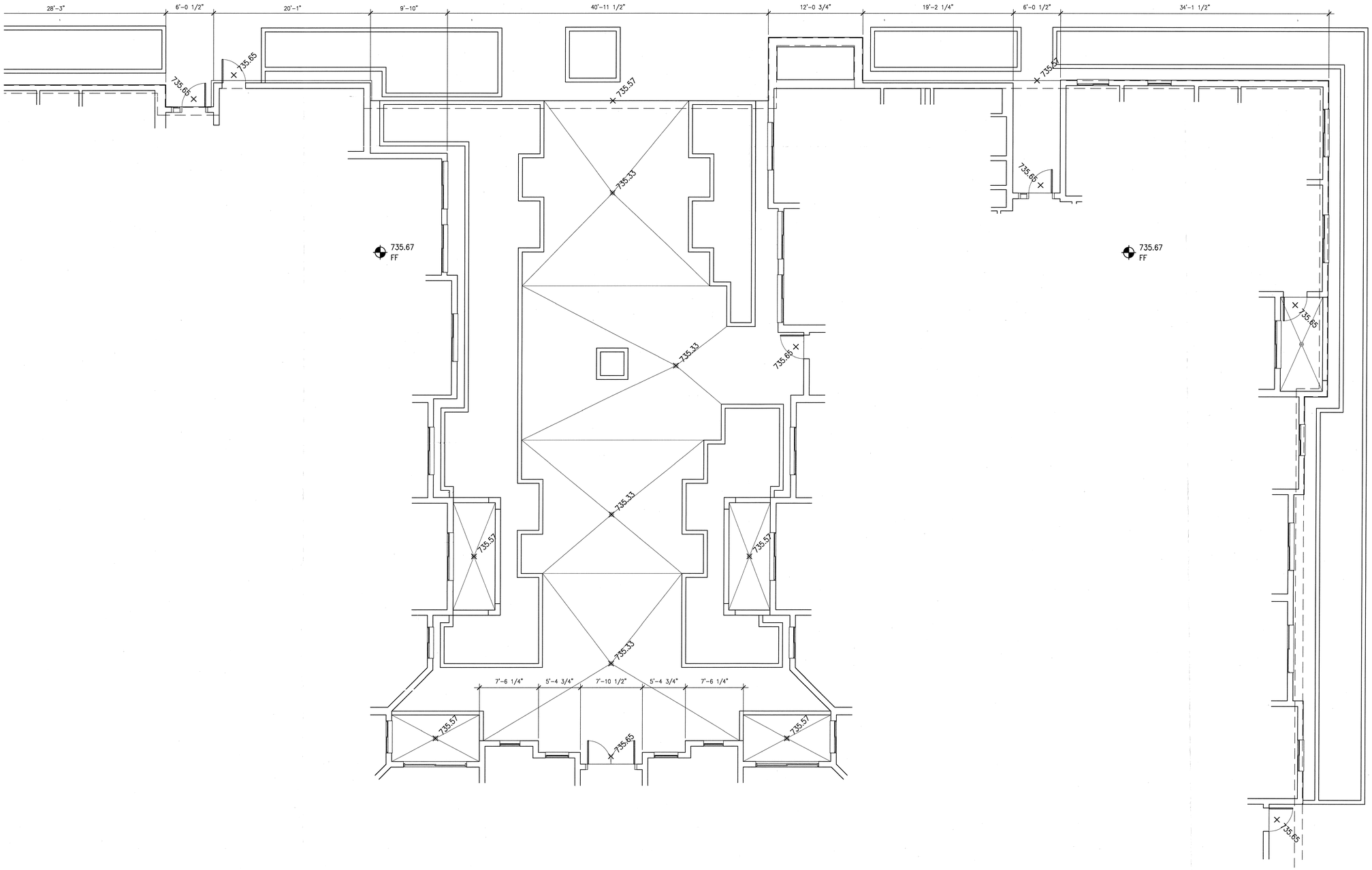

SITE GRADING PLAN

Scale 3/16" = 1'-0"

1

WWCOT
Widom Wein Cohen O'Leary Terasawa

3130 Wilshire Boulevard
Sixth Floor
Santa Monica, California 90403
T (310) 828-0040
F (310) 453-9432
www.wwcot.com

Inland Empire
Palm Springs
Moorpark
Shanghai, China

RECEIVED
10:08 am, Aug 14, 2008
FRAMEMAX

Building Department Submittal: June 1, 2007
Issued For Bid: _____
Issued For Construction: January 29, 2008

RECEIVED
JUL 21 2008
SUFFOLK CONSTRUCTION

Bulletin # 22A

KEY PLAN

Project:
Jewish Home for The Aging
FOUNTAINVIEW AT EISENBERG VILLAGE
6440 Wilbur Ave
Reseda, CA. 91335

JEWISH HOME
JEWISH HOME FOR THE AGING
18855 Victory Blvd.
Reseda, CA 91335
Project Number: 04206.00

ENLARGED SITE GRADING PLAN

Date: 01/21/2008
Drawn By: _____
Checked By: _____

A1.10B
Sheet No.

File Path & Name: F:\PROJECTS\04206-00\A-CD\SHEETS\A1.10.DWG
© WWCOT 2006 Jul 21, 2008 - 01:34 pm

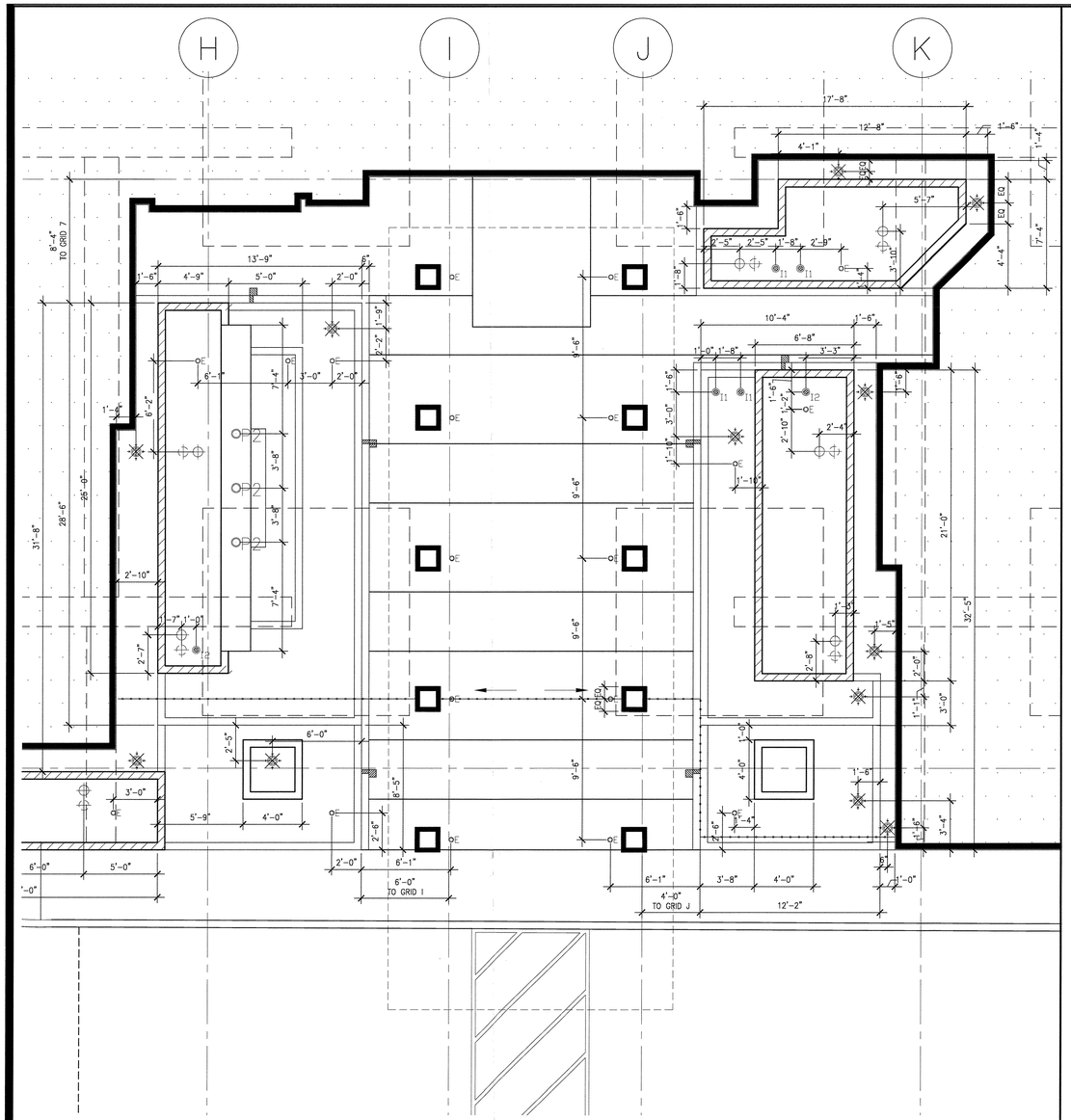

ENLARGED SOUTH-WEST COURTYARD

Scale 1/4" = 1'-0" 14

ENLARGED SOUTH-WEST COURTYARD

Scale 1/4" = 1'-0" 2

PLAN NOTES

Scale - 1

1. DRAINS AT UNIT PATIO ARE CENTERED, TYP. U.N.O.
2. 6" GRAVEL STRIP BETWEEN PLANTER & HARDSCAPE, TYP. U.N.O.

- I1 — 1" IRRIGATION LINE PENETRATION
- I2 — 2" IRRIGATION LINE PENETRATION
- E — 1" ELECTRICAL CONDUIT PENETRATION, 2" SLEEVE RECOMMENDED
- 3" PLANTER/ AREA DRAIN PENETRATION
- 3" FILTRATION PLANTER DRAIN & OVERFLOW DRAIN PENETRATIONS
- FILTRATION PLANTER
- P1 — 1" SLEEVE PLUMBING LINE PENETRATION @ FOUNTAIN
- P2 — 2" SLEEVE PLUMBING LINE PENETRATION @ FOUNTAIN

WWC OT
Widom Wein Cohen O'Leary Terasawa

3130 Wilshire Boulevard
Sixth Floor
Santa Monica, California 90403
T (310) 828-0040
F (310) 453-9432
www.wwcot.com

Inland Empire
Palm Springs
Moorpark
Shanghai, China

RECEIVED
10:08 am, Aug 14, 2008
FRAMEMAX

Building Department Submittal: June 1, 2007
Issued For Bid:
Issued For Construction: January 29, 2008

△4 08-07-2008 ADDITIONAL PENETRATIONS AT SW COURTYARD

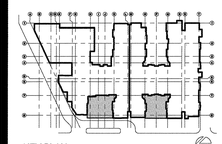

KEY PLAN

RECEIVED
AUG 08 2008
SUFFOLK CONSTRUCTION

Project:
Jewish Home for The Aging
FOUNTAINVIEW AT EISENBERG VILLAGE
6440 Wilbur Ave
Reseda, CA. 91335

JEWISH HOME FOR THE AGING
18855 Victory Blvd.
Reseda, CA 91335
Project Number: 04206.00

COURT YARD PENETRATIONS

Date: 01/21/2008
Drawn By: _____
Checked By: _____

A1.11
Sheet No.

File Path & Name: F:\PROJECTS\04206-00\A-CD\SHEETS\A1.11.DWG
© WWCOT 2006 Aug 07, 2008 - 02:48 pm

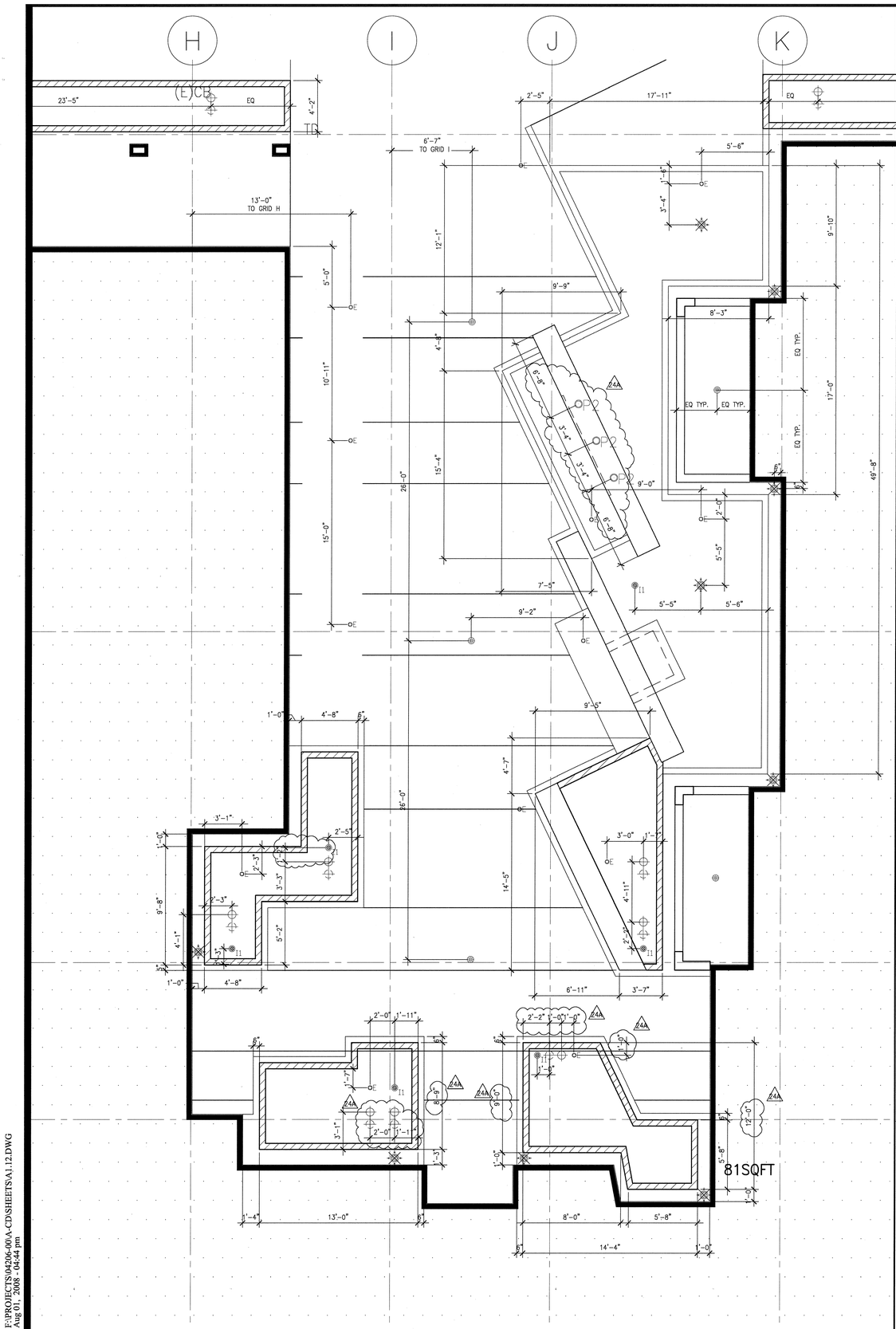

NORTH WEST COURTYARD

Scale 1/4" = 1'-0"

9

SOUTH WEST COURTYARD

Scale 1/4" = 1'-0"

1

WWC OT
Widom Wein Cohen O'Leary Terasawa

3130 Wilshire Boulevard
Sixth Floor
Santa Monica, California 90403
T (310) 828-0040
F (310) 453-9432
www.wwcot.com

Inland Empire
Palm Springs
Moorpark
Shanghai, China

RECEIVED
10:08 am, Aug 14, 2008
FRAMEMAX

Building Department Submittal: June 1, 2007
Issued For Bid: ———
Issued For Construction: January 29, 2008

24A 08-01-2008 LANDSCAPE/ HARDSCAPE/ IRRIGATION DRAWINGS

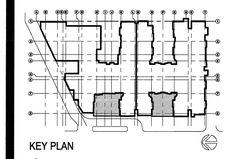

KEY PLAN

RECEIVED
AUG 04 2008
SUFFOLK CONSTRUCTION

Project:
Jewish Home for The Aging
FOUNTAINVIEW AT EISENBERG VILLAGE

6440 Wilbur Ave
Reseda, CA. 91335

JEWISH HOME FOR THE AGING
18855 Victory Blvd.
Reseda, CA 91335

Project Number: 04206.00

COURT YARD PENETRATIONS

Date: 01/21/2008
Drawn By: ———
Checked By: ———

A1.12
Sheet No.

File Path & Name: F:\PROJECTS\04206-00\A-CD\SHEETS\A1.12.DWG
© WWCOT 2006 Aug 01, 2008 - 04:44 pm

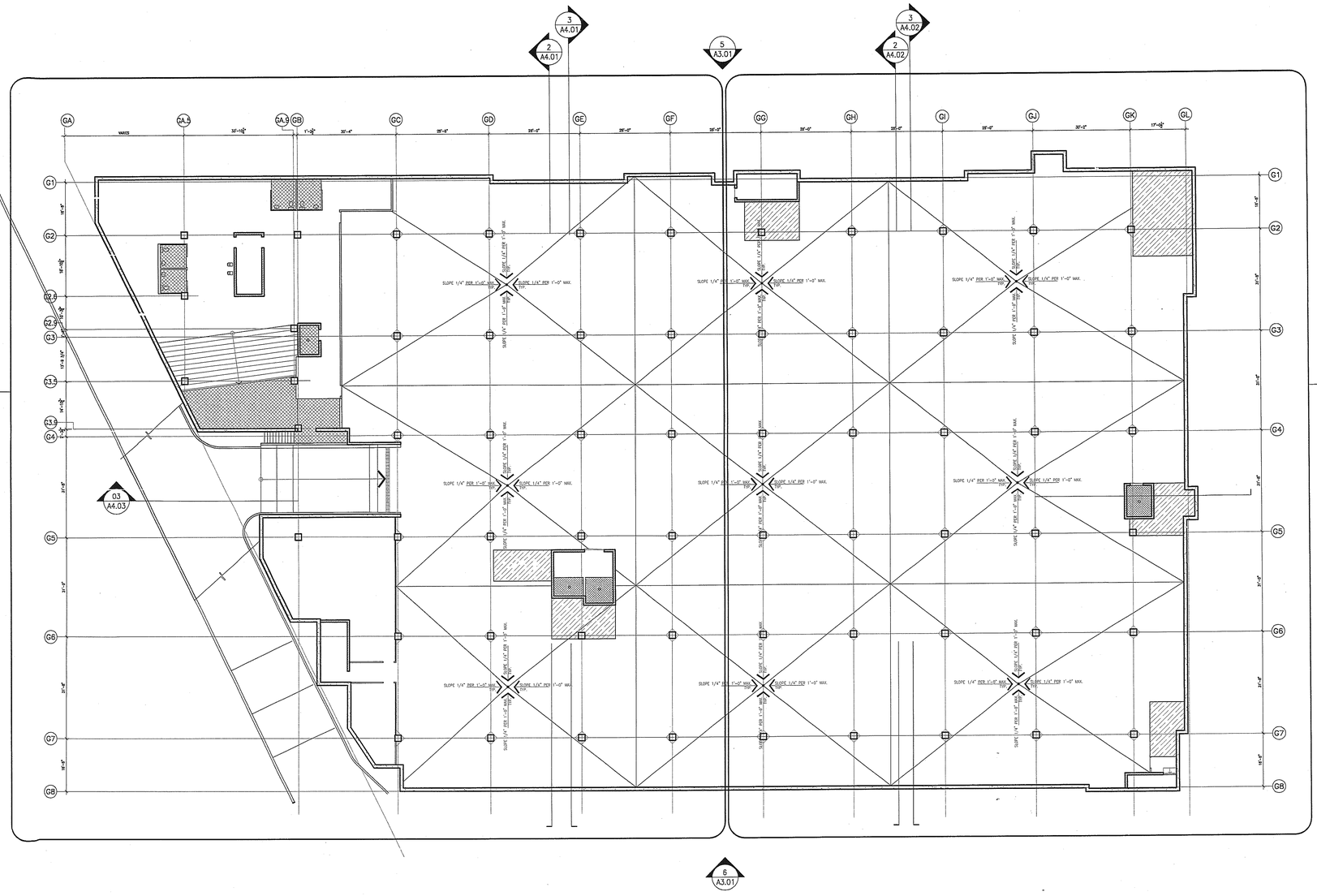

OVERALL BASEMENT SLAB PLAN

Scale 1/16" = 1'-0" | 5

NOT USED

Scale X" = 1'-0" | 1

TRUE NORTH

PLAN NORTH

–.DWG

–.DWG

File Path & Name: F:\PROJECTS\04206-00\A-CD\SHEETS\A2.0.0.DWG
May 28, 2007 - 03:37 pm

© WWCOT 2006

WWCOT
Widom Wein Cohen O'Leary Terasawa

3130 Wilshire Boulevard
Sixth Floor
Santa Monica, California 90403
T (310) 828-0040
F (310) 453-9432
www.wwcot.com

Inland Empire
Palm Springs
Moorpark
Shanghai, China

RECEIVED
10:08 am, Aug 14, 2008
FRAMEMAX

Building Department Submittal: June 1, 2007
Issued For Bid:
Issued For Construction:

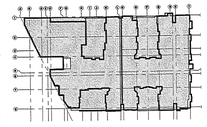

Project:
Jewish Home for The Aging
FOUNTAINVIEW AT EISENBERG VILLAGE
6440 Wilbur Ave
Reseda, CA. 91335

JEWISH HOME FOR THE AGING
18855 Victory Blvd.
Reseda, CA 91335
Project Number: 04206.00

OVERALL BASEMENT SLAB PLAN

Date: 04/05/2007
Drawn By:
Checked By:

A2.0.0
Sheet No.

RECEIVED BY SUFFOLK ON 06/01/07

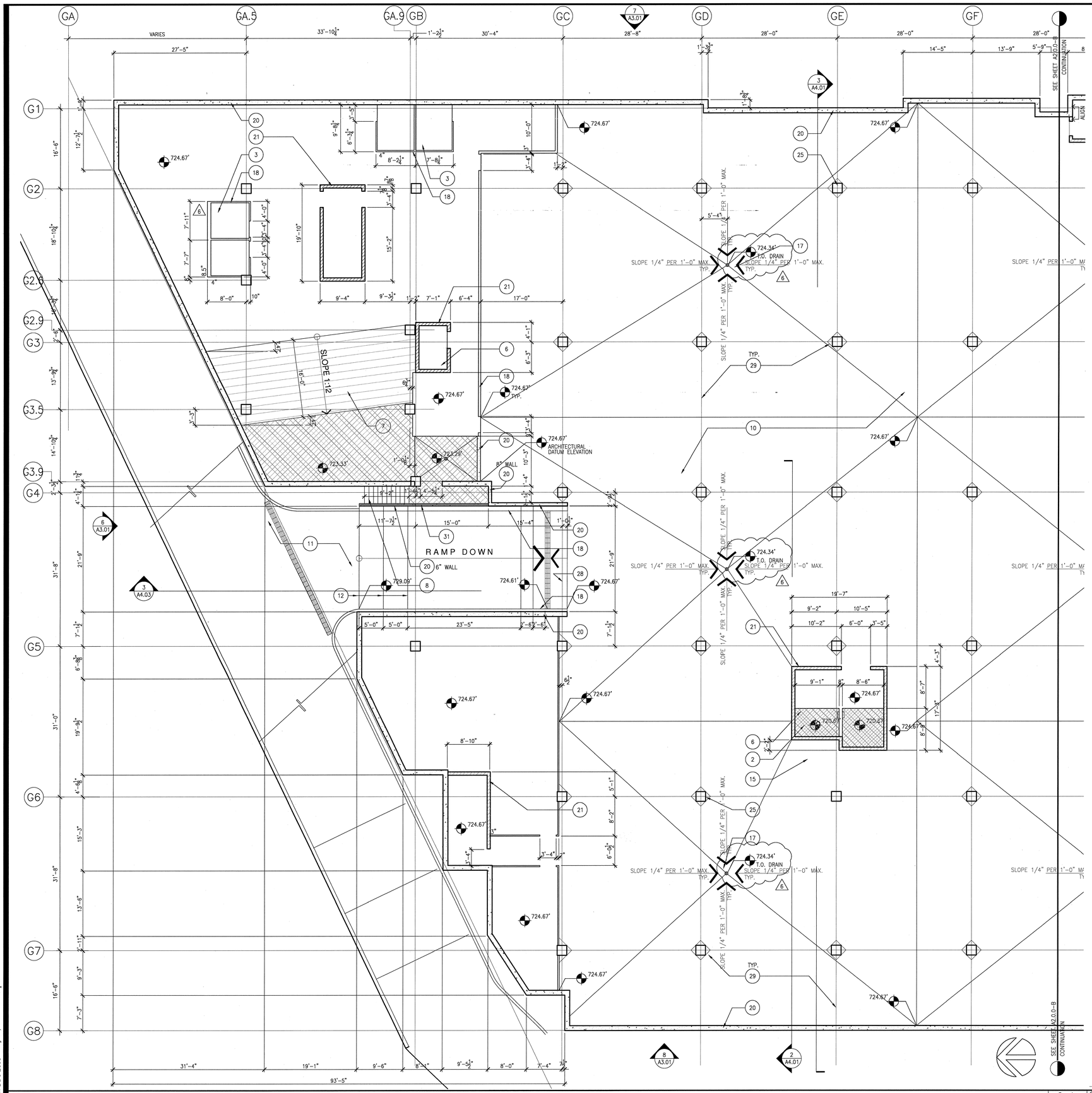

BASEMENT SLAB PLAN (NORTH)

Scale 1/8" = 1'-0" (5)

SLAB NOTES

Scale N.T.S. (1)

1. ALL CONCRETE CURBS AT EXTERIOR PERIMETER OF BUILDING SHALL BE 6" WIDE x6" HIGH U.N.O., SEE LEGEND FOR CURB SIZE SYMBOL
2. ALL CONCRETE CURBS IN INTERIOR OF BUILDING SHALL BE 4" WIDE x 4" HIGH U.N.O., SEE LEGEND FOR CURB SIZE SYMBOL
3. REFER TO STRUCTURAL PLANS FOR SLAB AND CURB REINFORCING
4. REFER TO STRUCTURAL PLANS FOR CONCRETE FOOTINGS DETAILS AND REINFORCEMENT.
5. CONTRACTOR TO COORDINATE PRECISE LOCATION OF BELOW SLAB PLUMBING AND ELECTRICAL CONNECTIONS.

LEGEND

Scale N.T.S. (2)

- CMU WALL, SEE STRUCTURAL DRAWINGS FOR DETAILS
- CONCRETE WALL, SEE STRUCTURAL DRAWINGS FOR DETAILS
- CROSSED HATCHING DENOTES DEPRESSED SLAB
- HATCHING DENOTES ELEVATED SLAB
- OPEN — OPENING IN SLAB
- -1.5" — CONCRETE FLOOR LEVEL FROM ARCHITECTURAL 0.00 FLOOR REFERENCE, DIMENSIONS SHOWN IN BOX ARE GIVEN IN INCHES.
- 6 — NUMBER DENOTES CONCRETE CURB THICKNESS
- DOUBLE LINE DENOTES CONCRETE CURB
- (7) — KEY NOTE
- BROKEN LINE DENOTE PLUMBING FIXTURE, SEE FLOOR PLAN AND PLUMBING DRAWINGS FOR MORE INFORMATION.

SLAB PLAN KEY NOTES

Scale (3)

1. ~~10" STRUCTURAL CONCRETE DECK, SEE STRUCTURAL DRAWINGS FOR ADDITIONAL INFORMATION AND DETAILS, TYP.~~
2. DEPRESSED CONCRETE SLAB REFER TO STRUCTURAL FOR DETAILS, TYP.
3. PLUMBING FIXTURE SEE ARCHITECTURAL AND PLUMBING DRAWINGS
4. ~~STEEL COLUMN, SEE STRUCTURAL DRAWINGS~~
5. ~~RESTROOM FLOOR DRAIN, SEE X/AXX AND PLUMBING DRAWINGS~~
6. ELEVATOR PIT WITH ACCESS STEEL LADDER, SEE ARCHITECTURAL, STRUCTURAL PLANS AND SECTIONS. SEE X/AXX FOR LADDER DETAIL
7. CONCRETE ACCESS RAMP SEE DETAIL X/AXX
8. CONCRETE STAIRS, SEE STRUCTURAL DRAWINGS FOR REINFORCING DETAILS AND X/AXX FOR NOSING DETAILS
9. ~~CONCRETE CURB, SEE LEGEND, SLAB NOTES AND STRUCTURAL DRAWINGS FOR REINFORCING~~
10. CONCRETE SLAB ON GRADE, REFER TO STRUCTURAL DRAWINGS FOR SLAB THICKNESS AND DETAILS, TYP.
11. EXTERIOR CONCRETE SLAB FINISH, REFER TO SITE PLAN AND CIVIL DRAWINGS
12. DENOTES SLOPE CHANGE LINE
13. ~~CONCRETE EQUIPMENT PAD, SEE X/AXX AND STRUCTURAL AND MEP DRAWINGS FOR ADDITIONAL INFORMATION.~~
14. ~~CONCRETE FILLED STEEL BOLLARDS X/AXX~~
15. RAISED CONC. SLAB, SEE STRUCTURAL DRAWINGS FOR DETAILS
16. ~~GROOVED CONCRETE FINISH~~
17. AREA DRAIN, SEE X/AXX KITCHEN DRAIN X/AXX, FLOOR SINK X/AXX ROOF SINK X/AXX SEE PLUMBING DRAWINGS FOR ADDITIONAL INFORMATION, TYP.
18. 6" HIGH CONCRETE BUMPER CURB
19. ~~STEEL GRATE DRAIN, SEE X/AXX~~
20. CONCRETE WALL, SEE STRUCTURAL DRAWINGS FOR SIZE AND DETAILS, TYP.
21. 8" FULLY GROUTED CMU WALL, SEE STRUCTURAL DRAWINGS FOR DETAILS, TYP.
22. ~~SUMP PIT, SEE STRUCTURAL AND PLUMBING PLANS, PROVIDE 1/2" STEEL COVER GRATE.~~
23. ~~CONSTRUCTION/CONTROL JOINT AT SLAB ON GRADE, SEE X/AXX~~
24. ~~DECK OPENING, REFER TO STRUCTURAL DRAWINGS FOR DETAILS~~
25. CONCRETE COLUMN, SEE STRUCTURAL DRAWINGS FOR REINFORCING AND DETAILS, TYP.
26. ~~LINE OF GARAGE WALL BELOW~~
27. ~~CONTROL JOINT, SEE X/AXX~~
28. 6" STEEL TRENCH DRAIN, SEE DETAIL 8/C2.04
29. ~~CONCRETE CONTROL JOINT, SEE DETAIL X/AXX, TYP.~~
30. ~~COLUMN AND DROP PANEL BELOW, SEE STRUCTURAL~~
31. 1 1/2" DIA STEEL GUARDRAIL

* KEYNOTES APPLY AS SHOWN ON THIS PLAN ONLY

WWCOT
Widom Wein Cohen O'Leary Terasawa

3130 Wilshire Boulevard
Sixth Floor
Santa Monica, California 90403
T (310) 828-0040
F (310) 453-9432
www.wwcot.com

Inland Empire
Palm Springs
Moorpark
Shanghai, China

RECEIVED
10:08 am, Aug 14, 2008
FRAMEMAX

Building Department
Submittal: June 1, 2007
Issued For Bid:
Issued For Construction: January 29, 2008

6 05-12-2008 SLAB ELEVATION REVISIONS

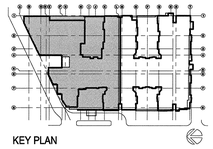

KEY PLAN

Project:
Jewish Home for The Aging
FOUNTAINVIEW AT EISENBERG VILLAGE
6440 Wilbur Ave
Reseda, CA. 91335
BPB JEWISH HOME
JEWISH HOME FOR THE AGING
18855 Victory Blvd.
Reseda, CA 91335
Project Number: 04206.00

BASEMENT SLAB PLAN (NORTH)

Date: 01/21/2008
Drawn By: _____
Checked By: _____

A2.0.0-A
Sheet No.

File Path & Name: F:\PROJECTS\04206-00\A-CD\SHEETS\A2.0.0-A.DWG
© WWCOT 2006 May 21, 2008 - 04:19 pm

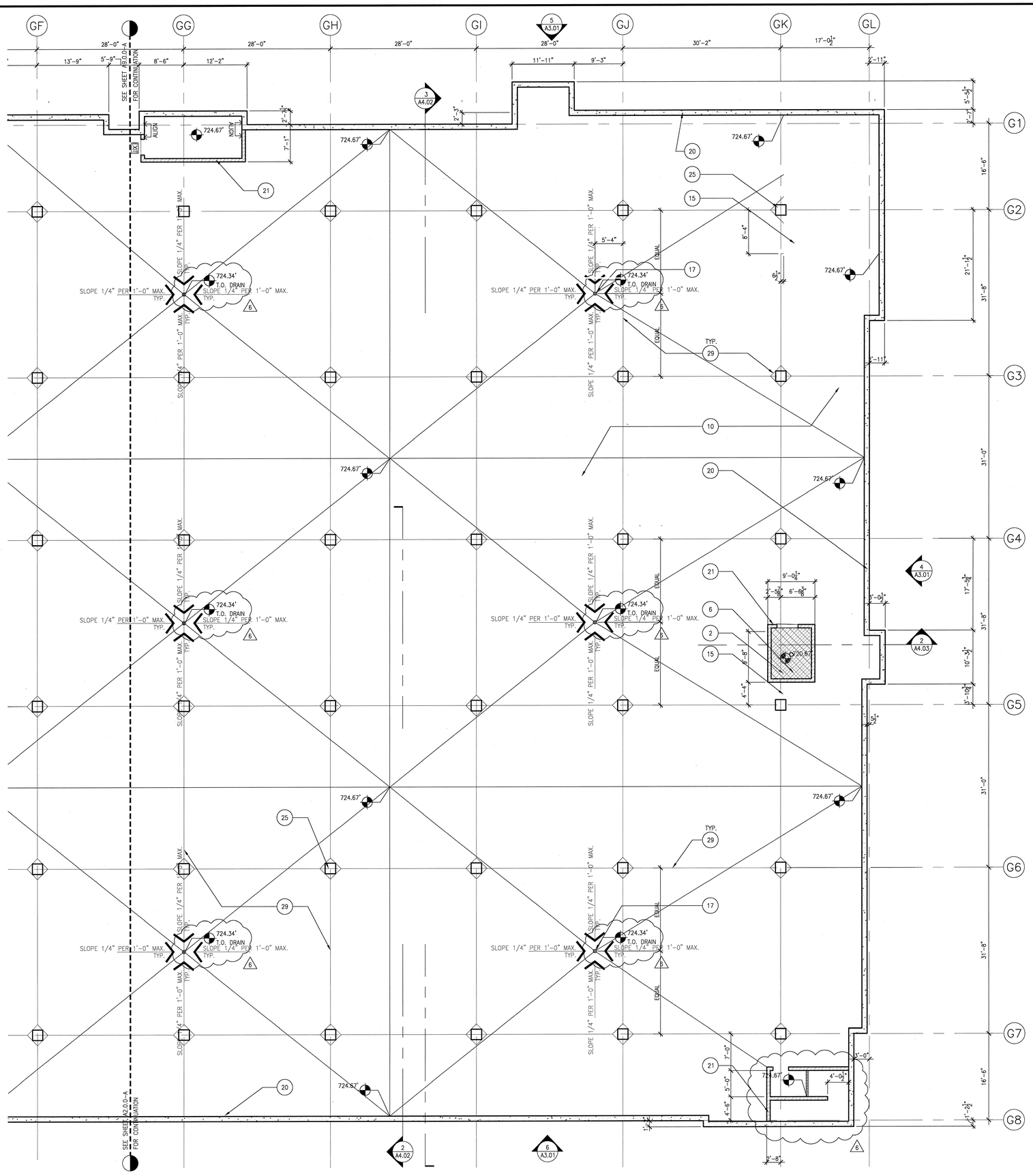

BASEMENT SLAB PLAN (SOUTH)

Scale 1/8" = 1'-0" 5

1. 10" STRUCTURAL CONCRETE DECK, SEE STRUCTURAL DRAWINGS FOR ADDITIONAL INFORMATION AND DETAILS, TYP.
2. DEPRESSED CONCRETE SLAB REFER TO STRUCTURAL FOR DETAILS, TYP.
3. PLUMBING FIXTURE SEE ARCHITECTURAL AND PLUMBING DRAWINGS
4. STEEL COLUMN, SEE STRUCTURAL DRAWINGS
5. RESTROOM FLOOR DRAIN, SEE X/AXX AND PLUMBING DRAWINGS
6. ELEVATOR PIT WITH ACCESS STEEL LADDER, SEE ARCHITECTURAL, STRUCTURAL PLANS AND SECTIONS. SEE X/AXX FOR LADDER DETAIL
7. CONCRETE ACCESS RAMP SEE DETAIL X/AXX
8. CONCRETE STAIRS, SEE STRUCTURAL DRAWINGS FOR REINFORCING DETAILS AND X/AXX FOR NOSING DETAILS
9. CONCRETE CURB, SEE LEGEND, SLAB NOTES AND STRUCTURAL DRAWINGS FOR REINFORCING
10. CONCRETE SLAB ON GRADE, REFER TO STRUCTURAL DRAWINGS FOR SLAB THICKNESS AND DETAILS, TYP.
11. EXTERIOR CONCRETE SLAB FINISH, REFER TO SITE PLAN AND CIVIL DRAWINGS
12. DENOTES SLOPE CHANGE LINE
13. CONCRETE EQUIPMENT PAD, SEE X/AXX AND STRUCTURAL AND MEP DRAWINGS FOR ADDITIONAL INFORMATION.
14. CONCRETE FILLED STEEL BOLLARDS X/AXX
15. RAISED CONC. SLAB, SEE STRUCTURAL DRAWINGS FOR DETAILS
16. GROOVED CONCRETE FINISH
17. AREA DRAIN, SEE X/AXX KITCHEN DRAIN X/AXX, FLOOR SINK X/AXX ROOF SINK X/AXX SEE PLUMBING DRAWINGS FOR ADDITIONAL INFORMATION, TYP.
18. 6" HIGH CONCRETE BUMPER CURB
19. STEEL GRATE DRAIN, SEE X/AXX
20. CONCRETE WALL, SEE STRUCTURAL DRAWINGS FOR SIZE AND DETAILS, TYP.
21. 8" FULLY GROUTED CMU WALL, SEE STRUCTURAL DRAWINGS FOR DETAILS, TYP.
22. SUMP PIT, SEE STRUCTURAL AND PLUMBING PLANS, PROVIDE 1/2" STEEL COVER GRATE.
23. CONSTRUCTION/CONTROL JOINT AT SLAB ON GRADE, SEE X/AXX
24. DECK OPENING, REFER TO STRUCTURAL DRAWINGS FOR DETAILS
25. CONCRETE COLUMN, SEE STRUCTURAL DRAWINGS FOR REINFORCING AND DETAILS, TYP.
26. LINE OF GARAGE WALL BELOW
27. CONTROL JOINT, SEE X/AXX
28. 6" STEEL TRENCH DRAIN, SEE DETAIL 8/G2.04
29. CONCRETE CONTROL JOINT, SEE DETAIL X/AXX, TYP.
30. COLUMN AND DROP PANEL BELOW, SEE STRUCTURAL
31. 1 1/2" DIA STEEL GUARDRAIL

* KEYNOTES APPLY AS SHOWN ON THIS PLAN ONLY

SLAB PLAN KEY NOTES — Scale 3

- CMU WALL, SEE STRUCTURAL DRAWINGS FOR DETAILS
- CONCRETE WALL, SEE STRUCTURAL DRAWINGS FOR DETAILS
- CROSSED HATCHING DENOTES DEPRESSED SLAB
- HATCHING DENOTES ELEVATED SLAB
- OPEN — OPENING IN SLAB
- -1.5" — CONCRETE FLOOR LEVEL FROM ARCHITECTURAL 0.00 FLOOR REFERENCE, DIMENSIONS SHOWN IN BOX ARE GIVEN IN INCHES.
- 6 — NUMBER DENOTES CONCRETE CURB THICKNESS
- DOUBLE LINE DENOTES CONCRETE CURB
- (7) — KEY NOTE
- BROKEN LINE DENOTE PLUMBING FIXTURE, SEE FLOOR PLAN AND PLUMBING DRAWINGS FOR MORE INFORMATION.

LEGEND — Scale N.T.S. 2

1. ALL CONCRETE CURBS AT EXTERIOR PERIMETER OF BUILDING SHALL BE 6" WIDE x6" HIGH U.N.O., SEE LEGEND FOR CURB SIZE SYMBOL
2. ALL CONCRETE CURBS IN INTERIOR OF BUILDING SHALL BE 4" WIDE x 4" HIGH U.N.O., SEE LEGEND FOR CURB SIZE SYMBOL
3. REFER TO STRUCTURAL PLANS FOR SLAB AND CURB REINFORCING
4. REFER TO STRUCTURAL PLANS FOR CONCRETE FOOTINGS DETAILS AND REINFORCEMENT.
5. CONTRACTOR TO COORDINATE PRECISE LOCATION OF BELOW SLAB PLUMBING AND ELECTRICAL CONNECTIONS.

SLAB NOTES — Scale N.T.S. 1

WWCOT
Widom Wein Cohen O'Leary Terasawa

3130 Wilshire Boulevard
Sixth Floor
Santa Monica, California 90403
T (310) 828-0040
F (310) 453-9432
www.wwcot.com

Inland Empire
Palm Springs
Moorpark
Shanghai, China

RECEIVED
10:08 am, Aug 14, 2008
FRAMEMAX

Building Department Submittal: June 1, 2007
Issued For Bid: _____
Issued For Construction: January 29, 2008

6 05-12-2008 SLAB ELEVATION REVISIONS

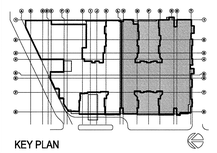

KEY PLAN

Project:
Jewish Home for The Aging
FOUNTAINVIEW AT EISENBERG VILLAGE
6440 Wilbur Ave
Reseda, CA. 91335

JEWISH HOME FOR THE AGING
18855 Victory Blvd.
Reseda, CA 91335
Project Number: 04206.00

BASEMENT SLAB PLAN (SOUTH)

Date: 01/21/2008
Drawn By: _____
Checked By: _____

A2.0.0-B
Sheet No.

File Path & Name: F:\PROJECTS\04206.00\A-CD\SHEETS\A2.0.0-B.DWG
© WWCOT 2006 May 21, 2008 - 04:20 pm

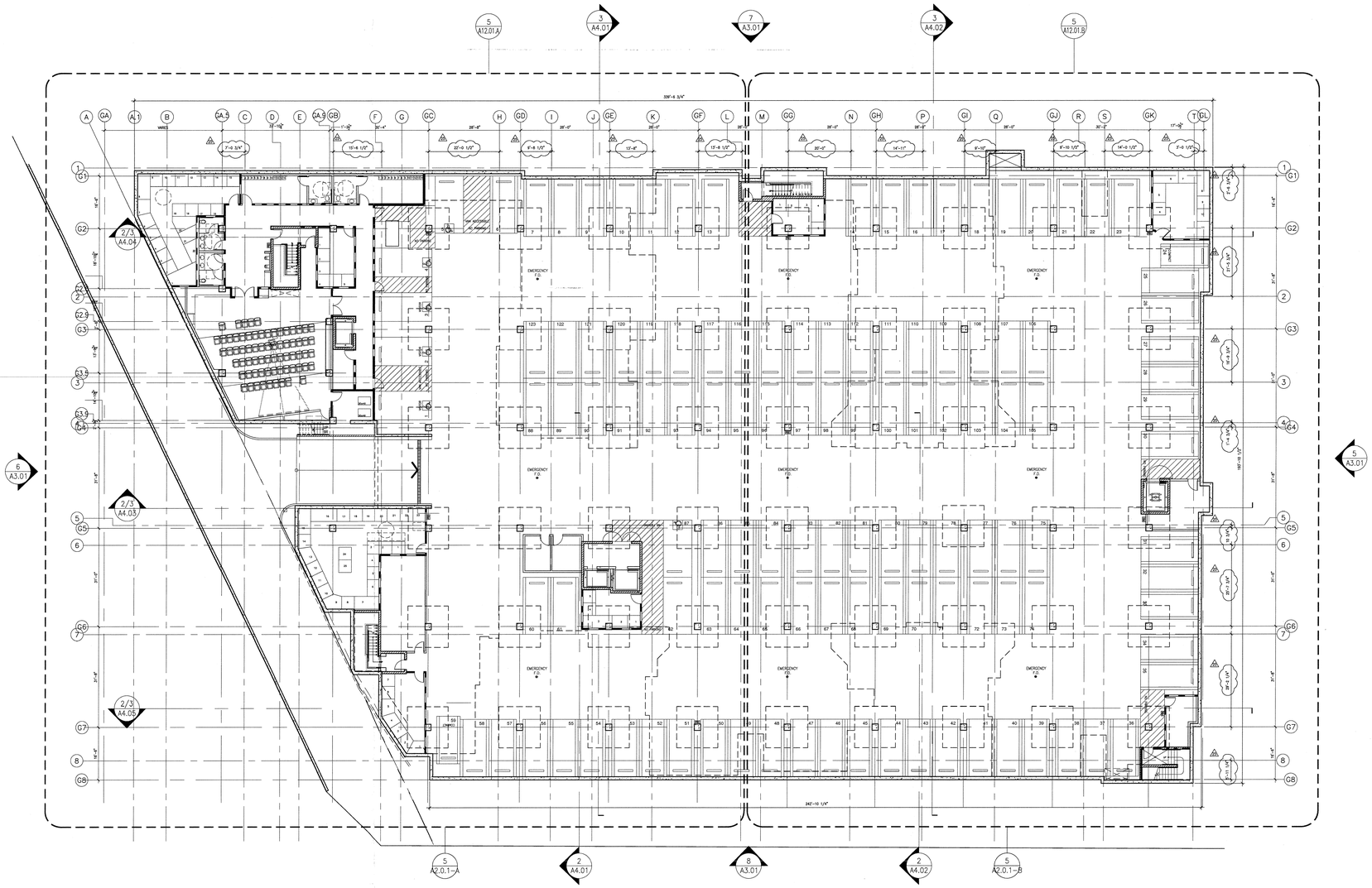

LEGEND:

- ONE HOUR RATED WALL. SEE WALL TYPE SCHEDULE ON SHEET #A8.2.1 AND SHEET #A8.2.2
- TWO HOUR RATED WALL. SEE WALL TYPE SCHEDULE ON SHEET #A8.2.1 AND SHEET #A8.2.2

BASEMENT FLOOR PLAN

Scale 1/16" = 1'-0" (5)

Not Used

Scale X" = 1'-0" (1)

File Path & Name: F:\PROJECTS\04206-000\A-CD\SHEETS\A2.0.1.DWG
© WWCOT 2006 Jun 27, 2008 - 11:07 am

WWCOT
Widom Wein Cohen O'Leary Terasawa

3130 Wilshire Boulevard
Sixth Floor
Santa Monica, California 90403
T (310) 828-0040
F (310) 453-9432
www.wwcot.com

Inland Empire
Palm Springs
Moorpark
Shanghai, China

RECEIVED
10:08 am, Aug 14, 2008
FRAMEMAX

Building Department Submittal: June 1, 2007
Issued For Bid: _____
Issued For Construction: January 29, 2008

2 06–26–2008 COLUMN GRID DIMENSIONS

RECEIVED
JUN 26 2008
SUFFOLK CONSTRUCTION

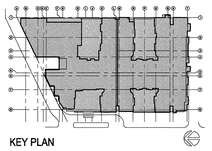

KEY PLAN

Project:
Jewish Home for The Aging
FOUNTAINVIEW AT EISENBERG VILLAGE
6440 Wilbur Ave
Reseda, CA. 91335

JEWISH HOME FOR THE AGING
18855 Victory Blvd.
Reseda, CA 91335

Project Number: 04206.00

OVERALL BASEMENT FLOOR PLAN

Date: 01/21/2008
Drawn By:
Checked By: _____

A2.0.1
Sheet No.

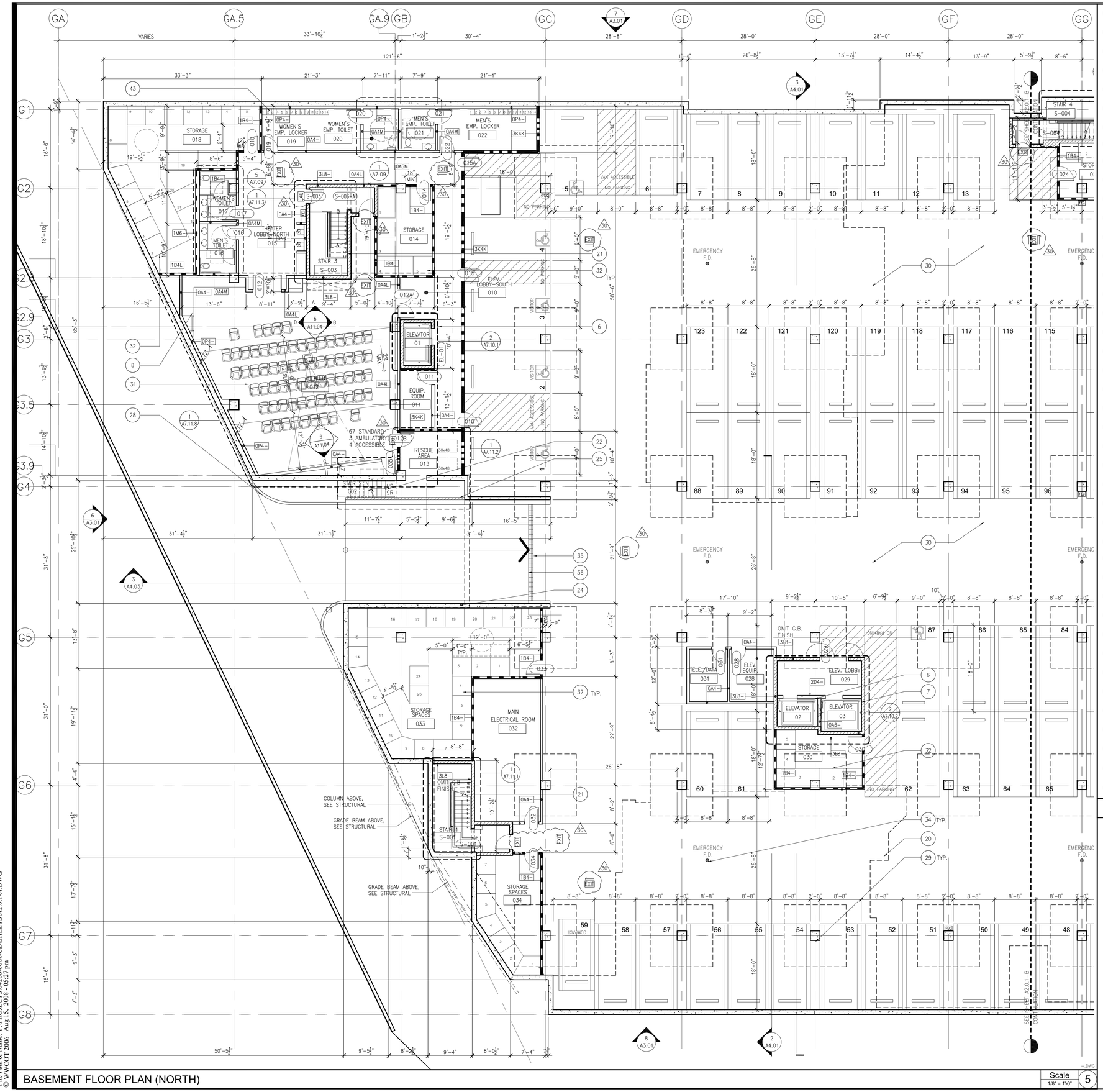

BASEMENT FLOOR PLAN (NORTH)

Scale 1/8" = 1'-0" 5

1 PLANTER, SEE LANDSCAPE FOR INFORMATION AND DETAILS
2 STONE PAVING, SEE LANDSCAPE FOR ADDITIONAL INFORMATION AND DETAILS
3 STEEL COLUMN, SEE STRUCTURAL PLANS FOR ADDITIONAL INFORMATION, TYP.
4 STEEL HANDRAIL, SEE ENLARGED STAIR DETAILS FOR ADDITIONAL INFORMATION
5 STEEL GUARDRAIL, SEE ENLARGED STAIR DETAILS FOR ADDITIONAL INFORMATION
6 PASSENGER ELEVATOR, SEE SPECIFICATIONS FOR TYPE AND MODEL
7 SERVICE ELEVATOR, SEE SPECIFICATIONS FOR TYPE AND MODEL
8 COUNTERTOP, SEE INTERIOR ELEVATIONS FOR FINISH AND DETAILS
9 STAINLES STEEL SINK, SEE INTERIOR ELEVATIONS AND PLUMBING PLANS FOR FIXTURE SPECIFICATIONS TYPE AND MODEL
10 BUILT IN BAR, SEE INTERIOR ELEVATION AND FINISH PLANS FOR TYPE AND DETAILS
11 ELECTRIC FIREPLACE, SEE SPECIFICATIONS
12 STONE HEARTH, SEE FINISH PLANS
13 BUILT-IN CABINETRY, SEE INTERIOR ELEVATIONS
14 BUILT-IN MAIL BOXES, SEE INTERIOR ELEVATIONS
15 COUNTERTOP AND SINK, SEE PLUMBING AND INTERIOR ELEVATION PLANS
16 WOOD RAILING, SEE INTERIOR ELEVATIONS
17 ALUMINUM STORE FRONT SYSTEM, SEE WINDOW SCHEDULE
18 KITCHEN EQUIPMENT, SEE FOOD SERVICE PLANS AND SPECIFICATIONS
19 REFRIGERATOR, SEE PROJECT MANUAL FOR RESIDENTIAL APPLIANCE SPECIFICATIONS
20 BUILDING LINE ABOVE, TYP.
21 PRE-FABRICATED CONCRETE FILLED PAN TREAD AND LANDINGS METAL STAIRS, SEE ENLARGED STAIR PLANS, TYP.
22 REINFORCED CONCRETE STAIRS, SEE STRUCTURAL DRAWINGS AND DETAIL 9,11,12/A7.11.2
23 WALL MOUNTED HANDRAIL
24 CONCRETE RETAINING WALL, SEE SLAB AND STRUCTURAL FOUNDATION PLANS FOR ADDITIONAL INFORMATION
25 CMU RETAINING WALL, SEE SLAB AND STRUCTURAL FOUNDATION PLANS FOR ADDITIONAL INFORMATION
26 W.I. FENCE OVER CMU WALL
27 GREEN SCREEN ANCHORED IN CMU WALL, SEE LANDSCAPE DRAWINGS
28 CONCRETE CURB AND WALK, SEE SLAB PLAN, TYP.
29 REINFORCED CONCRETE COLUMN, SEE STRUCTURAL DRAWINGS FOR SIZE AND DETAILS, TYP.
30 6" CONCRETE SLAB, SEE STRUCTURAL DRAWINGS FOR SPECIFICATIONS AND DETAILS, TYP.
31 24" FIXED THEATER SEATING, SEE SPECIFICATIONS, TYP.
32 CHAIN LINK STORAGE CAGE WITH LOCK AND KEY
33 BALCONY RAILING, SEE SHEET A6.5.3
34 AREA EMERGENCY DRAIN, SEE PLUMBING
35 TRENCH DRAIN, SEE PLUMBING AND CIVIL
36 CONCRETE RAMP WITH MEDIUM BROOM FINISH
37 ROLL DOWN SECURITY GRILLE
38 STANDING SEAM METAL ENTRY CANOPY ROOFING
39 DEX-O-TEX DECKING FINISH, SLOPE TO DRAIN, TYP.
40 GARAGE VENTILATION SHAFT SEE STRUCTURAL FOR DIAGONAL BRACING
41 DRYWALL PLANT ON
42 JULIETTE BALCONY SEE SHEET A6.5.3
43 PAINTED 12"X15"X72" METAL LOCKER (2-TIER)
44 EXPANSION JOINT
45 GRADE BEAM ABOVE, SEE STRUCTURAL

KEY NOTES Scale 2

WWCOT
Widom Wein Cohen O'Leary Terasawa
3130 Wilshire Boulevard
Sixth Floor
Santa Monica, California 90403
T (310) 828-0040
F (310) 453-0432
www.wwcot.com
Inland Empire
Palm Springs
Moorpark
Shanghai, China

RECEIVED
8:15 am, Aug 18, 2008
FRAMEMAX

Building Department Submittal: June 1, 2007
Issued For Bid:
Issued For Construction: January 29, 2008
30 08-15-2008 EXIT SIGNAGE REVISIONS

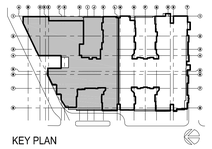

KEY PLAN

Project:
Jewish Home for The Aging
FOUNTAINVIEW AT EISENBERG VILLAGE
6440 Wilbur Ave
Reseda, CA. 91335

JEWISH HOME
JEWISH HOME FOR THE AGING
18855 Victory Blvd.
Reseda, CA 91335
Project Number: 04206.00

BASEMENT FLOOR PLAN (NORTH)

Date: 01/21/2008
Drawn By:
Checked By:

A2.0.1-A
Sheet No.

File Path & Name: F:\PROJECTS\04206-00\A-CD\SHEETS\A2.0.1-A.DWG
© WWCOT 2006 Aug 15, 2008 - 05:27 pm

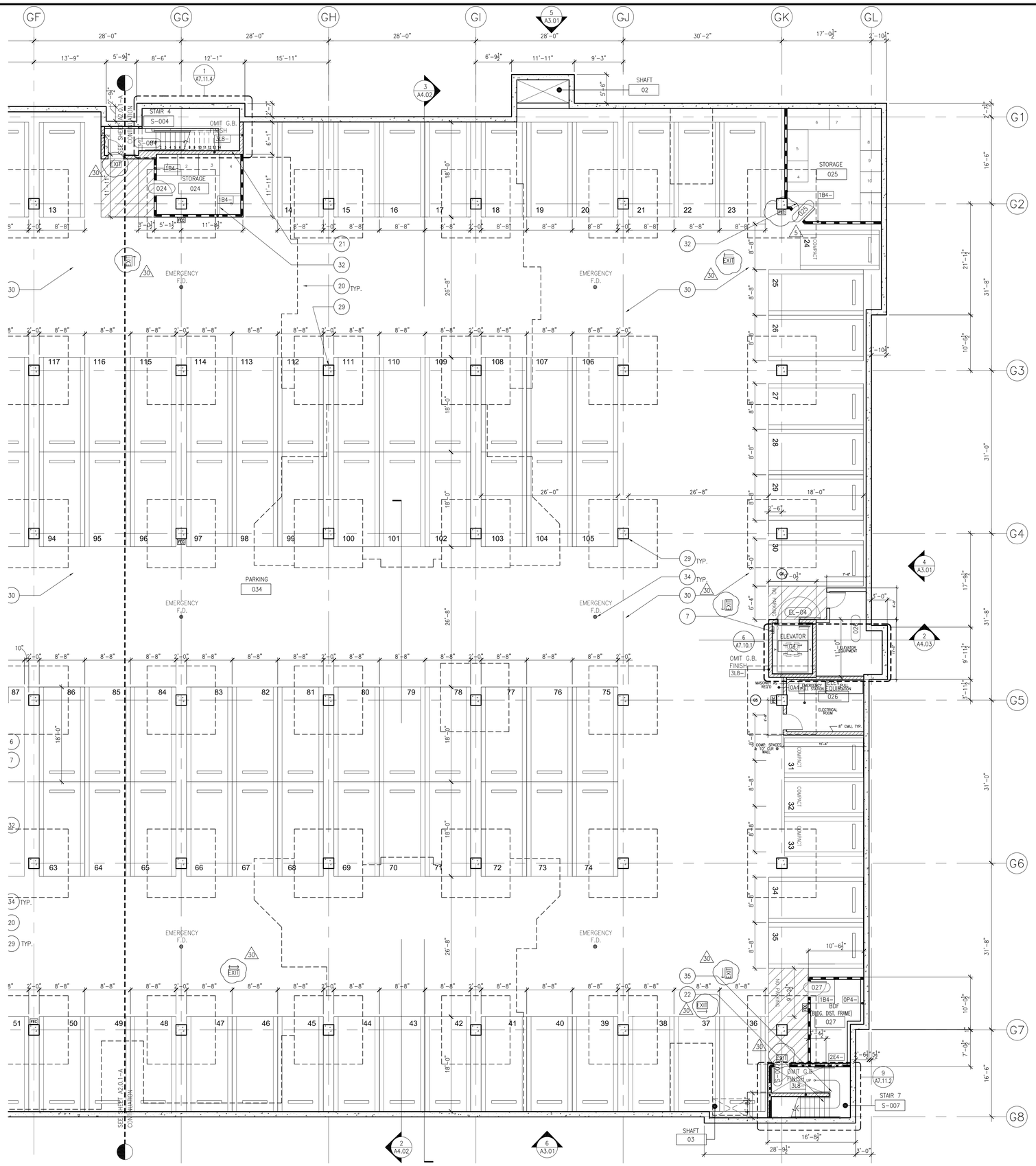

BASEMENT FLOOR PLAN (SOUTH)

Scale 1/8" = 1'-0" (5)

1. PLANTER, SEE LANDSCAPE FOR INFORMATION AND DETAILS
2. STONE PAVING, SEE LANDSCAPE FOR ADDITIONAL INFORMATION AND DETAILS
3. STEEL COLUMN, SEE STRUCTURAL PLANS FOR ADDITIONAL INFORMATION, TYP.
4. STEEL HANDRAIL, SEE ENLARGED STAIR DETAILS FOR ADDITIONAL INFORMATION
5. STEEL GUARDRAIL, SEE ENLARGED STAIR DETAILS FOR ADDITIONAL INFORMATION
6. PASSENGER ELEVATOR, SEE SPECIFICATIONS FOR TYPE AND MODEL
7. SERVICE ELEVATOR, SEE SPECIFICATIONS FOR TYPE AND MODEL
8. COUNTERTOP, SEE INTERIOR ELEVATIONS FOR FINISH AND DETAILS
9. STAINLES STEEL SINK, SEE INTERIOR ELEVATIONS AND PLUMBING PLANS FOR FIXTURE SPECIFICATIONS TYPE AND MODEL
10. BUILT IN BAR, SEE INTERIOR ELEVATION AND FINISH PLANS FOR TYPE AND DETAILS
11. ELECTRIC FIREPLACE, SEE SPECIFICATIONS
12. STONE HEARTH, SEE FINISH PLANS
13. BUILT-IN CABINETRY, SEE INTERIOR ELEVATIONS
14. BUILT-IN MAIL BOXES, SEE INTERIOR ELEVATIONS
15. COUNTERTOP AND SINK, SEE PLUMBING AND INTERIOR ELEVATION PLANS
16. WOOD RAILING, SEE INTERIOR ELEVATIONS
17. ALUMINUM STORE FRONT SYSTEM, SEE WINDOW SCHEDULE
18. KITCHEN EQUIPMENT, SEE FOOD SERVICE PLANS AND SPECIFICATIONS
19. REFRIGERATOR, SEE PROJECT MANUAL FOR RESIDENTIAL APPLIANCE SPECIFICATIONS
20. BUILDING LINE ABOVE, TYP.
21. PRE-FABRICATED CONCRETE FILLED PAN TREAD AND LANDINGS METAL STAIRS, SEE ENLARGED STAIR PLANS, TYP.
22. REINFORCED CONCRETE STAIRS, SEE STRUCTURAL DRAWINGS AND DETAIL 9,11,12/A7.11.2
23. WALL MOUNTED HANDRAIL
24. CONCRETE RETAINING WALL, SEE SLAB AND STRUCTURAL FOUNDATION PLANS FOR ADDITIONAL INFORMATION
25. CMU RETAINING WALL, SEE SLAB AND STRUCTURAL FOUNDATION PLANS FOR ADDITIONAL INFORMATION
26. W.I. FENCE OVER CMU WALL
27. GREEN SCREEN ANCHORED IN CMU WALL, SEE LANDSCAPE DRAWINGS
28. CONCRETE CURB AND WALK, SEE SLAB PLAN, TYP.
29. REINFORCED CONCRETE COLUMN, SEE STRUCTURAL DRAWINGS FOR SIZE AND DETAILS, TYP.
30. 6" CONCRETE SLAB, SEE STRUCTURAL DRAWINGS FOR SPECIFICATIONS AND DETAILS, TYP.
31. 24" FIXED THEATER SEATING, SEE SPECIFICATIONS, TYP.
32. CHAIN LINK STORAGE CAGE WITH LOCK AND KEY
33. BALCONY RAILING, SEE SHEET A6.5.3
34. AREA EMERGENCY DRAIN, SEE PLUMBING
35. TRENCH DRAIN, SEE PLUMBING AND CIVIL
36. CONCRETE RAMP WITH MEDIUM BROOM FINISH
37. ROLL DOWN SECURITY GRILLE
38. STANDING SEAM METAL ENTRY CANOPY ROOFING
39. DEX-O-TEX DECKING FINISH, SLOPE TO DRAIN, TYP.
40. GARAGE VENTILATION SHAFT SEE STRUCTURAL FOR DIAGONAL BRACING
41. DRYWALL PLANT ON
42. JULIETTE BALCONY SEE SHEET A6.5.3
43. PAINTED 12"X15"X72" METAL LOCKER (2-TIER)
44. EXPANSION JOINT
45. GRADE BEAM ABOVE, SEE STRUCTURAL

KEY NOTES

Scale (2)

WWC OT
Widom Wein Cohen O'Leary Terasawa

3130 Wilshire Boulevard
Sixth Floor
Santa Monica, California 90403
T (310) 828-0040
F (310) 453-9432
www.wwcot.com

Inland Empire
Palm Springs
Moorpark
Shanghai, China

RECEIVED
8:15 am, Aug 18, 2008
FRAMEMAX

Building Department Submittal: June 1, 2007
Issued For Bid:
Issued For Construction: January 29, 2008

30 08-15-2008 EXIT SIGNAGE REVISIONS

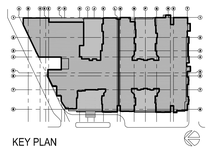

KEY PLAN

Project:
Jewish Home for The Aging
FOUNTAINVIEW AT EISENBERG VILLAGE
6440 Wilbur Ave
Reseda, CA. 91335

JEWISH HOME
JEWISH HOME FOR THE AGING
18855 Victory Blvd.
Reseda, CA 91335
Project Number: 04206.00

BASEMENT FLOOR PLAN (SOUTH)

Date: 01/21/2008
Drawn By:
Checked By:

A2.0.1-B
Sheet No.

File Path & Name: F:\PROJECTS\04206-00\A-CD\SHEETS\A2.0.1-B.DWG
© WWCOT 2006 Aug 15, 2008 - 05:19 pm

Xref ..\wblocks\title_sheet_blocks\A-a-fpN_Cl notes.dwg

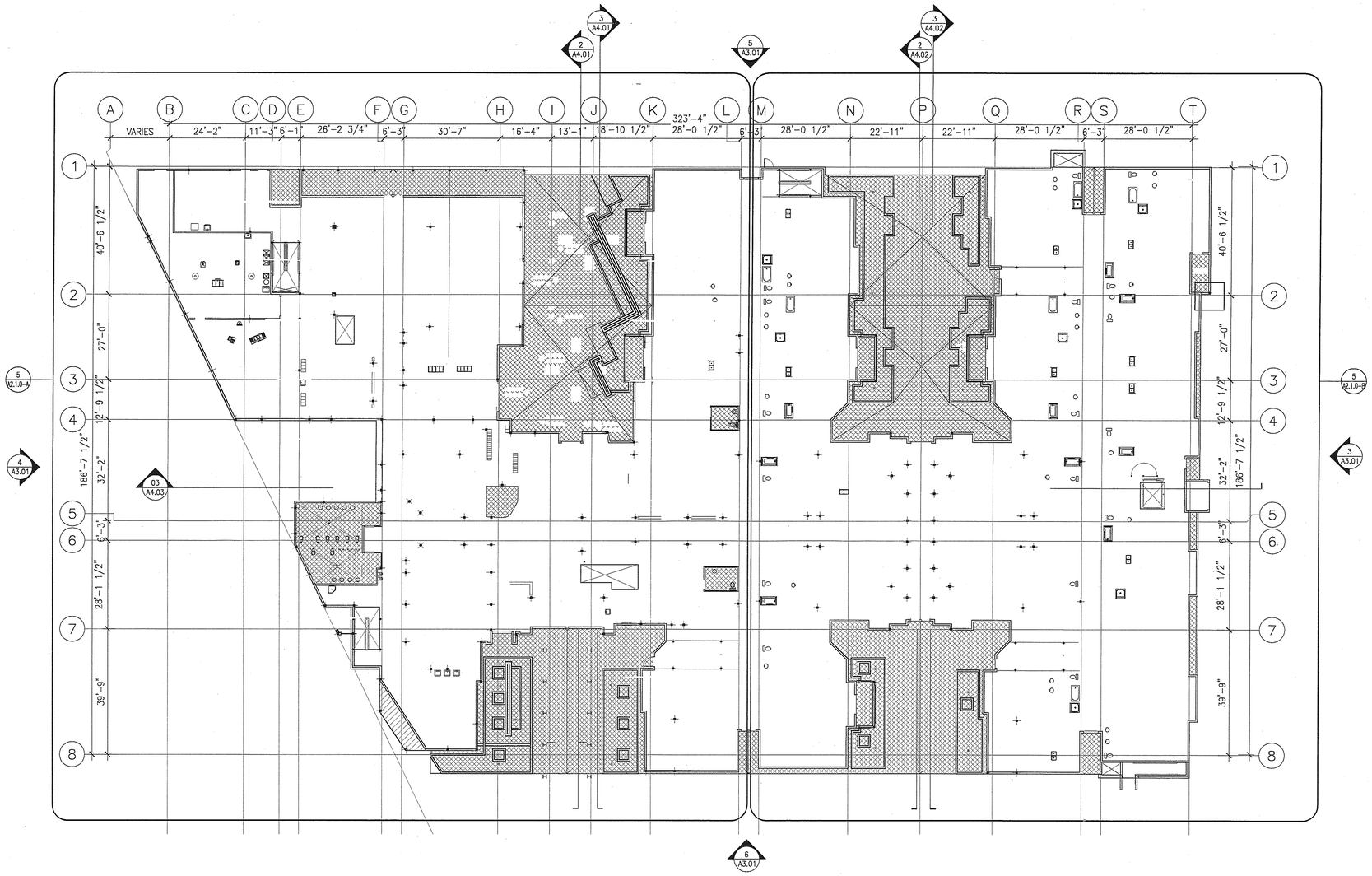

TRUE NORTH

PLAN NORTH

GROUND FLOOR PLAN (NORTH) — Scale 1/16" = 1'-0" (5)

NOT USED — Scale X" = 1'-0" (1)

File Path & Name: F:\PROJECTS\04206-00\A-CD\SHEETS\A2.1.0.DWG
© WWCOT 2006 May 28, 2007 - 03:38 pm

WWC OT
Widom Wein Cohen O'Leary Terasawa

3130 Wilshire Boulevard
Sixth Floor
Santa Monica, California 90403
T (310) 828-0040
F (310) 453-9432
www.wwcot.com

Inland Empire
Palm Springs
Moorpark
Shanghai, China

RECEIVED
10:08 am, Aug 14, 2008
FRAMEMAX

Building Department Submittal: June 1, 2007
Issued For Bid: ____
Issued For Construction: ____

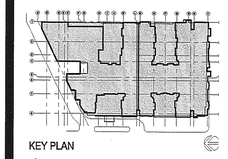

KEY PLAN

Project:
Jewish Home for The Aging
FOUNTAINVIEW AT EISENBERG VILLAGE
6440 Wilbur Ave
Reseda, CA. 91335

JEWISH HOME FOR THE AGING
18855 Victory Blvd.
Reseda, CA 91335
Project Number: 04206.00

OVERALL GROUND FLOOR SLAB PLAN

Date: 04/05/2007
Drawn By: ____
Checked By: ____

A2.1.0
Sheet No.

RECEIVED BY SUFFOLK ON 06/01/07

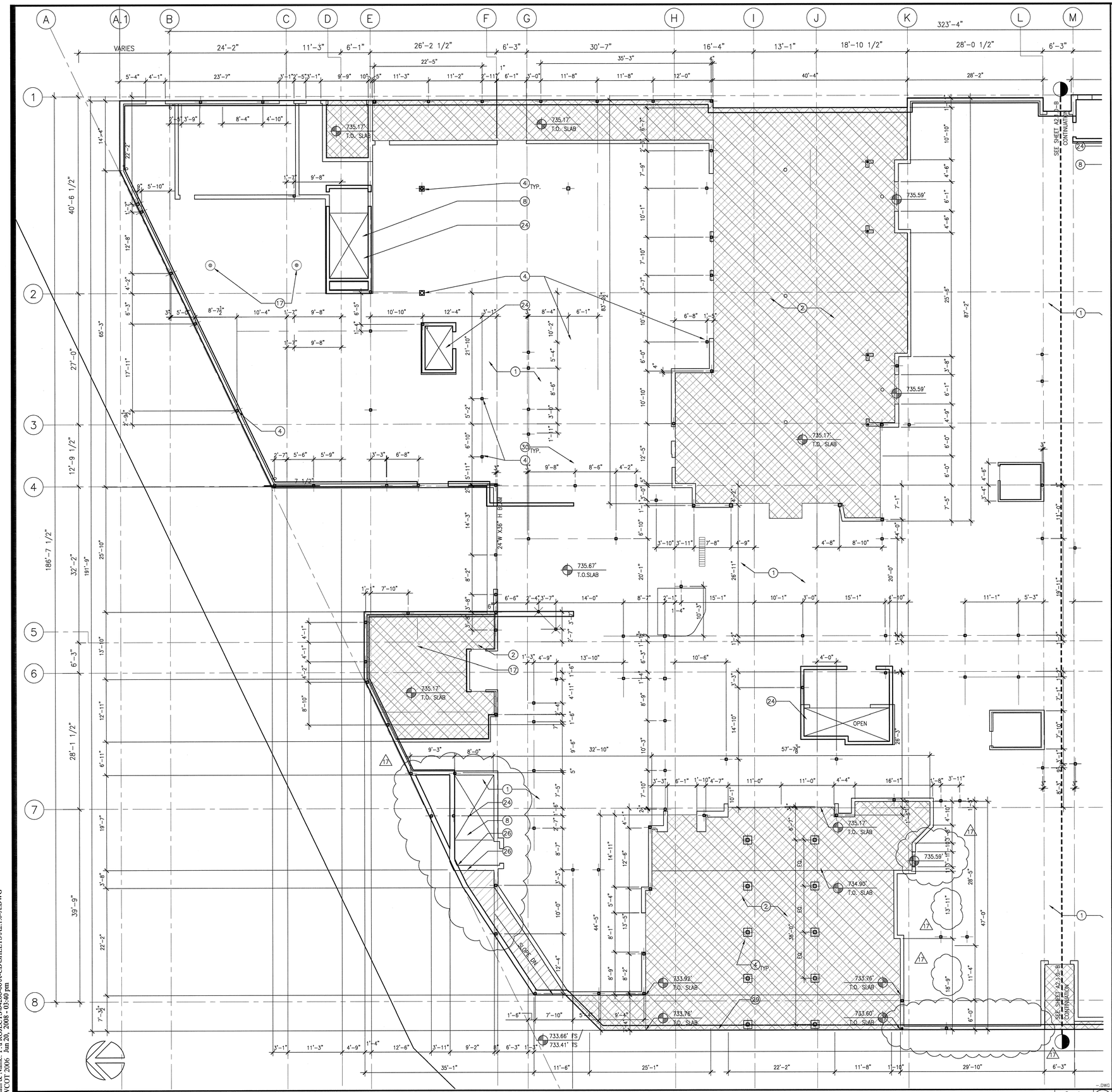

GROUND FLOOR PLAN (NORTH)

Scale 1/8" = 1'-0" (4)

SLAB NOTES

Scale N.T.S. (1)

1. 10" STRUCTURAL CONCRETE DECK, SEE STRUCTURAL DRAWINGS FOR ADDITIONAL INFORMATION AND DETAILS, TYP.
2. DEPRESSED CONCRETE SLAB REFER TO STRUCTURAL FOR DETAILS, TYP.
3. ~~PLUMBING FIXTURE SEE ARCHITECTURAL AND PLUMBING DRAWINGS~~
4. STEEL COLUMN, SEE STRUCTURAL DRAWINGS
5. ~~RESTROOM FLOOR DRAIN, SEE X/AXX AND PLUMBING DRAWINGS~~
6. ~~ELEVATOR PIT WITH ACCESS STEEL LADDER, SEE ARCHITECTURAL, STRUCTURAL PLANS AND SECTIONS. SEE X/AXX FOR LADDER DETAIL~~
7. ~~CONCRETE ACCESS RAMP SEE DETAIL X/AXX~~
8. CONCRETE STAIRS, SEE STRUCTURAL DRAWINGS FOR REINFORCING DETAILS AND X/AXX FOR NOSING DETAILS
9. ~~CONCRETE CURB, SEE LEGEND, SLAB NOTES AND STRUCTURAL DRAWINGS FOR REINFORCING~~
10. CONCRETE SLAB ON GRADE, REFER TO STRUCTURAL DRAWINGS FOR SLAB THICKNESS AND DETAILS, TYP.
11. ~~EXTERIOR CONCRETE SLAB FINISH, REFER TO SITE PLAN AND CIVIL DRAWINGS~~
12. ~~DENOTES SLOPE CHANGE LINE~~
13. ~~CONCRETE EQUIPMENT PAD, SEE X/AXX AND STRUCTURAL AND MEP DRAWINGS FOR ADDITIONAL INFORMATION.~~
14. ~~CONCRETE FILLED STEEL BOLLARDS X/AXX~~
15. ~~RAISED CONC. SLAB, SEE STRUCTURAL DRAWINGS FOR DETAILS~~
16. ~~GROOVED CONCRETE FINISH~~
17. ~~AREA DRAIN, SEE X/AXX KITCHEN DRAIN X/AXX, FLOOR SINK X/AXX ROOF SINK X/AXX SEE PLUMBING DRAWINGS FOR ADDITIONAL INFORMATION, TYP.~~
18. ~~6" HIGH CONCRETE BUMPER CURB~~
19. ~~STEEL GRATE DRAIN, SEE X/AXX~~
20. ~~CONCRETE WALL, SEE STRUCTURAL DRAWINGS FOR SIZE AND DETAILS, TYP.~~
21. ~~8" FULLY GROUTED CMU WALL, SEE STRUCTURAL DRAWINGS FOR DETAILS, TYP.~~
22. ~~SUMP PIT, SEE STRUCTURAL AND PLUMBING PLANS, PROVIDE 1/2" STEEL COVER GRATE.~~
23. ~~CONSTRUCTION/CONTROL JOINT AT SLAB~~ ON GRADE, SEE X/AXX
24. DECK OPENING, REFER TO STRUCTURAL DRAWINGS FOR DETAILS
25. ~~CONCRETE COLUMN, SEE STRUCTURAL DRAWINGS FOR REINFORCING AND DETAILS, TYP.~~
26. LINE OF GARAGE WALL BELOW
27. ~~CONTROL JOINT, SEE X/AXX~~
28. ~~6" STEEL TRENCH DRAIN, SEE DETAIL 8/G2.04~~
29. CONCRETE CONTROL JOINT, SEE DETAIL X/AXX, TYP.
30. ~~COLUMN AND DROP PANEL BELOW, SEE STRUCTURAL~~
31. 1 1/2" DIA STEEL GUARDRAIL

* KEYNOTES APPLY AS SHOWN ON THIS PLAN ONLY

SLAB PLAN KEY NOTES

Scale (3)

- CMU WALL, SEE STRUCTURAL DRAWINGS FOR DETAILS
- CONCRETE WALL, SEE STRUCTURAL DRAWINGS FOR DETAILS
- CROSSED HATCHING DENOTES DEPRESSED SLAB
- HATCHING DENOTES ELEVATED SLAB
- OPENING IN SLAB
- -1.5" CONCRETE FLOOR LEVEL FROM ARCHITECTURAL 0.00 FLOOR REFERENCE, DIMENSIONS SHOWN IN BOX ARE GIVEN IN INCHES.
- 6 NUMBER DENOTES CONCRETE CURB THICKNESS
- DOUBLE LINE DENOTES CONCRETE CURB
- (7) KEY NOTE
- BROKEN LINE DENOTE PLUMBING FIXTURE, SEE FLOOR PLAN AND PLUMBING DRAWINGS FOR MORE INFORMATION.

LEGEND

Scale N.T.S. (2)

1. ALL CONCRETE CURBS AT EXTERIOR PERIMETER OF BUILDING SHALL BE 6" WIDE x6" HIGH U.N.O., SEE LEGEND FOR CURB SIZE SYMBOL
2. ALL CONCRETE CURBS IN INTERIOR OF BUILDING SHALL BE 4" WIDE x 4" HIGH U.N.O., SEE LEGEND FOR CURB SIZE SYMBOL
3. REFER TO STRUCTURAL PLANS FOR SLAB AND CURB REINFORCING
4. REFER TO STRUCTURAL PLANS FOR CONCRETE FOOTINGS DETAILS AND REINFORCEMENT.
5. CONTRACTOR TO COORDINATE PRECISE LOCATION OF BELOW SLAB PLUMBING AND ELECTRICAL CONNECTIONS.

WWC OT
Widom Wein Cohen O'Leary Terasawa

3130 Wilshire Boulevard
Sixth Floor
Santa Monica, California 90403
T (310) 828-0040
F (310) 453-9432
www.wwcot.com

Inland Empire
Palm Springs
Moorpark
Shanghai, China

RECEIVED
10:08 am, Aug 14, 2008
FRAMEMAX

Building Department Submittal: June 1, 2007
Issued For Bid: _____
Issued For Construction: January 29, 2008

17 08-13-2008 UNIT LOCATION & STAIR WIDTH REVISIONS

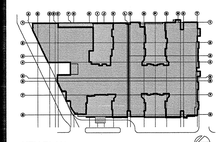

KEY PLAN

RECEIVED
JUN 23 2008
SUFFOLK CONSTRUCTION

Project:
Jewish Home for The Aging
FOUNTAINVIEW AT EISENBERG VILLAGE
6440 Wilbur Ave
Reseda, CA. 91335

JEWISH HOME FOR THE AGING
18855 Victory Blvd.
Reseda, CA 91335
Project Number: 04206.00

GROUND FLOOR SLAB PLAN (NORTH)

Date: 01/21/2008
Drawn By: _____
Checked By: _____

A2.1.0-A
Sheet No.

File Path & Name: F:\PROJECTS\04206-00\A-CD\SHEETS\A2.1.0-A.DWG
© WWCOT 2006 Jun 20, 2008 - 03:40 pm

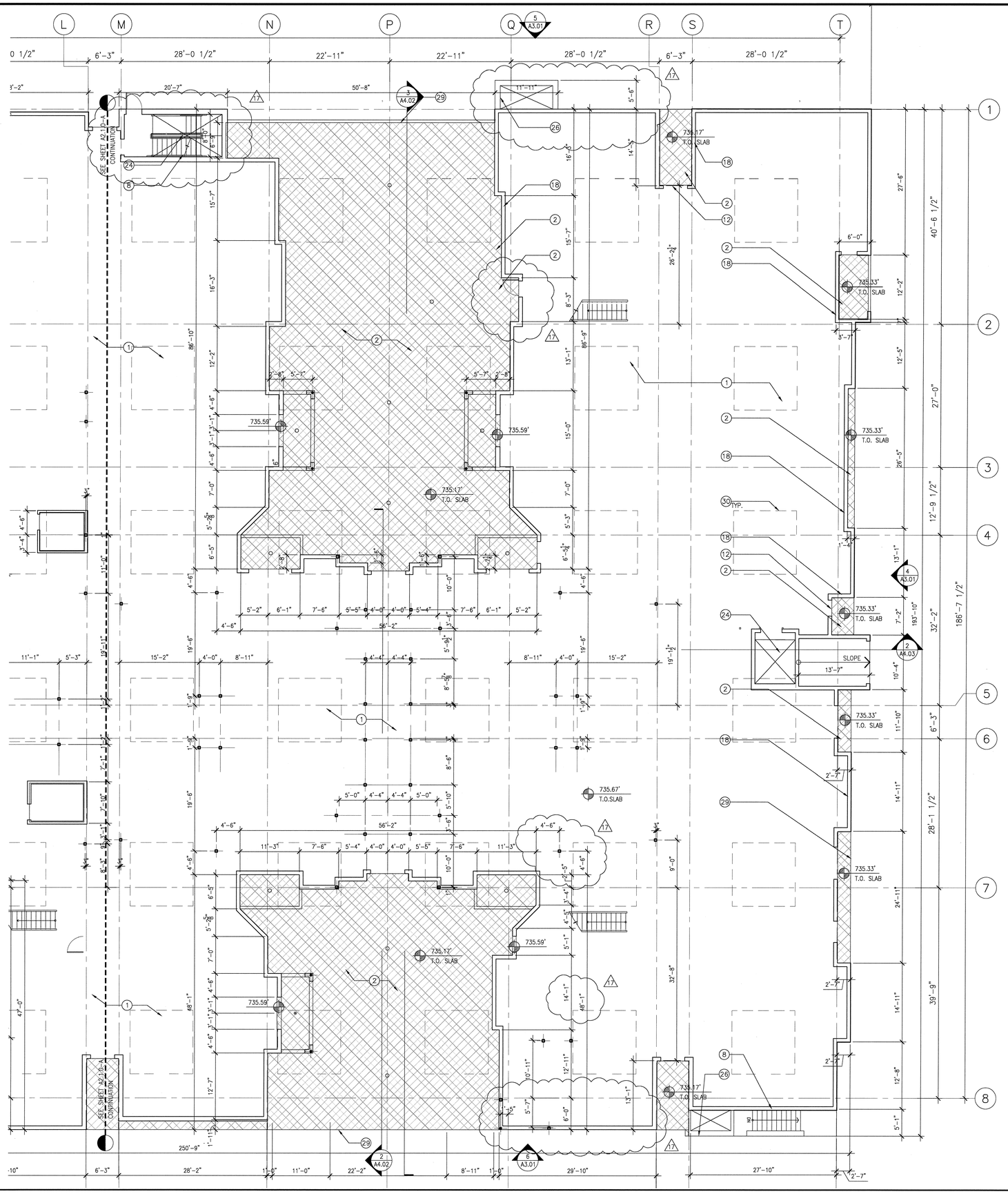

GROUND FLOOR SLAB PLAN (SOUTH)

Scale 1/8" = 1'-0" (5)

SLAB PLAN KEY NOTES

Scale 3

1. 10" STRUCTURAL CONCRETE DECK, SEE STRUCTURAL DRAWINGS FOR ADDITIONAL INFORMATION AND DETAILS, TYP.
2. DEPRESSED CONCRETE SLAB REFER TO STRUCTURAL FOR DETAILS, TYP.
3. ~~PLUMBING FIXTURE SEE ARCHITECTURAL AND PLUMBING DRAWINGS~~
4. ~~STEEL COLUMN, SEE STRUCTURAL DRAWINGS~~
5. ~~RESTROOM FLOOR DRAIN, SEE X/AXX AND PLUMBING DRAWINGS~~
6. ~~ELEVATOR PIT WITH ACCESS STEEL LADDER, SEE ARCHITECTURAL, STRUCTURAL PLANS AND~~ SECTIONS. SEE X/AXX FOR LADDER DETAIL
7. ~~CONCRETE ACCESS RAMP SEE DETAIL X/AXX~~
8. CONCRETE STAIRS, SEE STRUCTURAL DRAWINGS FOR REINFORCING DETAILS AND X/AXX FOR NOSING DETAILS
9. ~~CONCRETE CURB, SEE LEGEND, SLAB NOTES AND STRUCTURAL DRAWINGS FOR REINFORCING~~
10. ~~CONCRETE SLAB ON GRADE, REFER TO STRUCTURAL DRAWINGS FOR SLAB THICKNESS AND DETAILS, TYP.~~
11. EXTERIOR CONCRETE SLAB FINISH, REFER TO SITE PLAN AND CIVIL DRAWINGS
12. DENOTES SLOPE CHANGE LINE
13. ~~CONCRETE EQUIPMENT PAD, SEE X/AXX AND STRUCTURAL AND MEP DRAWINGS FOR ADDITIONAL INFORMATION.~~
14. ~~CONCRETE FILLED STEEL BOLLARDS X/AXX~~
15. ~~RAISED CONC. SLAB, SEE STRUCTURAL DRAWINGS FOR DETAILS~~
16. ~~GROOVED CONCRETE FINISH~~
17. ~~AREA DRAIN, SEE X/AXX KITCHEN DRAIN X/AXX, FLOOR SINK X/AXX ROOF SINK X/AXX SEE PLUMBING DRAWINGS FOR ADDITIONAL INFORMATION, TYP.~~
18. 6" HIGH CONCRETE BUMPER CURB
19. ~~STEEL GRATE DRAIN, SEE X/AXX~~
20. ~~CONCRETE WALL, SEE STRUCT~~URAL DRAWINGS FOR SIZE AND DETAILS, TYP.
21. ~~8" FULLY GROUTED CMU WALL,~~ SEE STRUCTURAL DRAWINGS FOR DETAILS, TYP.
22. ~~SUMP PIT, SEE STRUCTURAL AND PLUMBING PLANS, PROVIDE 1/2" STEEL COVER GRATE.~~
23. ~~CONSTRUCTION/CONTROL JOINT AT SLAB ON GRADE, SEE X/AXX~~
24. DECK OPENING, REFER TO STRUCTURAL DRAWINGS FOR DETAILS
25. ~~CONCRETE COLUMN, SEE STRUCTURAL DRAWINGS FOR REINFORCING~~ AND ~~DETAILS, TYP.~~
26. LINE OF GARAGE WALL BELOW
27. ~~CONTROL JOINT, SEE X/AXX~~
28. ~~6" STEEL TRENCH DRAIN, SEE DETAIL 8/G2.04~~
29. CONCRETE CONTROL JOINT, SEE DETAIL X/AXX, TYP.
30. COLUMN AND DROP PANEL BELOW, SEE STRUCTURAL
31. 1 1/2" DIA STEEL GUARDRAIL

* KEYNOTES APPLY AS SHOWN ON THIS PLAN ONLY

LEGEND

Scale N.T.S. (2)

- CMU WALL, SEE STRUCTURAL DRAWINGS FOR DETAILS
- CONCRETE WALL, SEE STRUCTURAL DRAWINGS FOR DETAILS
- CROSSED HATCHING DENOTES DEPRESSED SLAB
- HATCHING DENOTES ELEVATED SLAB
- OPEN — OPENING IN SLAB
- -1.5" — CONCRETE FLOOR LEVEL FROM ARCHITECTURAL 0.00 FLOOR REFERENCE, DIMENSIONS SHOWN IN BOX ARE GIVEN IN INCHES.
- 6 — NUMBER DENOTES CONCRETE CURB THICKNESS
- DOUBLE LINE DENOTES CONCRETE CURB
- (7) — KEY NOTE
- BROKEN LINE DENOTE PLUMBING FIXTURE, SEE FLOOR PLAN AND PLUMBING DRAWINGS FOR MORE INFORMATION.

SLAB NOTES

Scale N.T.S. (1)

1. ALL CONCRETE CURBS AT EXTERIOR PERIMETER OF BUILDING SHALL BE 6" WIDE x6" HIGH U.N.O., SEE LEGEND FOR CURB SIZE SYMBOL
2. ALL CONCRETE CURBS IN INTERIOR OF BUILDING SHALL BE 4" WIDE x 4" HIGH U.N.O., SEE LEGEND FOR CURB SIZE SYMBOL
3. REFER TO STRUCTURAL PLANS FOR SLAB AND CURB REINFORCING
4. REFER TO STRUCTURAL PLANS FOR CONCRETE FOOTINGS DETAILS AND REINFORCEMENT.
5. CONTRACTOR TO COORDINATE PRECISE LOCATION OF BELOW SLAB PLUMBING AND ELECTRICAL CONNECTIONS.

WWCOT
Widom Wein Cohen O'Leary Terasawa
3130 Wilshire Boulevard
Sixth Floor
Santa Monica, California 90403
T (310) 828-0040
F (310) 453-9432
www.wwcot.com
Inland Empire
Palm Springs
Moorpark
Shanghai, China

RECEIVED
10:08 am, Aug 14, 2008
FRAMEMAX

Building Department Submittal: June 1, 2007
Issued For Bid:
Issued For Construction: January 29, 2008

17 06-13-2008 UNIT LOCATION & STAIR WIDTH REVISIONS

KEY PLAN

RECEIVED
JUN 23 2008
SUFFOLK CONSTRUCTION

Project:
Jewish Home for The Aging
FOUNTAINVIEW AT EISENBERG VILLAGE
6440 Wilbur Ave
Reseda, CA. 91335

JEWISH HOME FOR THE AGING
18855 Victory Blvd.
Reseda, CA 91335
Project Number: 04206.00

GROUND FLOOR SLAB PLAN (SOUTH)

Date: 01/21/2008
Drawn By:
Checked By:

A2.1.0-B
Sheet No.

File Path & Name: F:\PROJECTS\04206-00\A-CD\SHEETS\A2.1.0-B.DWG
© WWCOT 2006 Jun 20, 2008 - 11:54 am

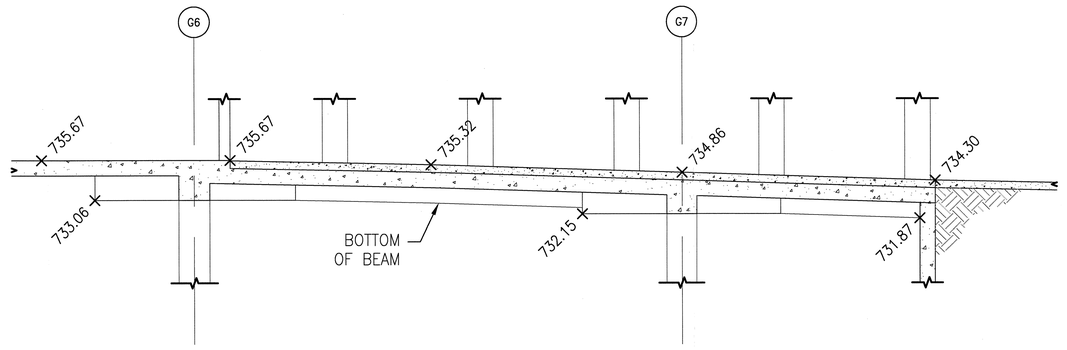

Partial First Floor Slab Section — Scale 1/8" = 1'-0" — 4

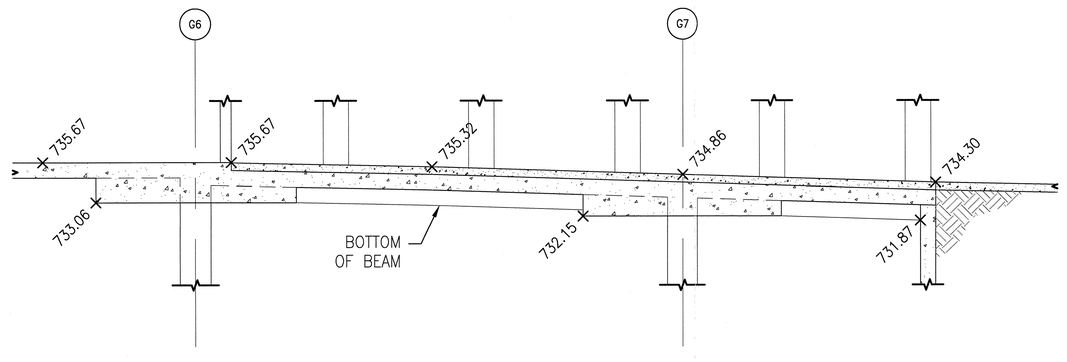

Partial First Floor Slab Section — Scale 1/8" = 1'-0" — 3

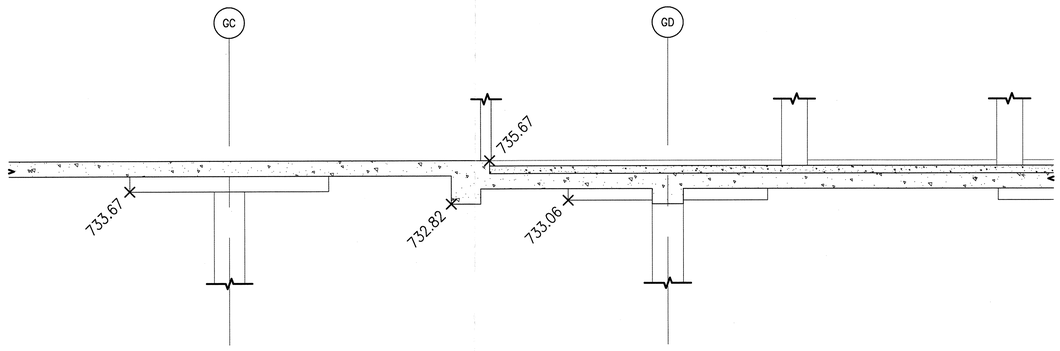

Partial First Floor Slab Section — Scale 1/8" = 1'-0" — 6

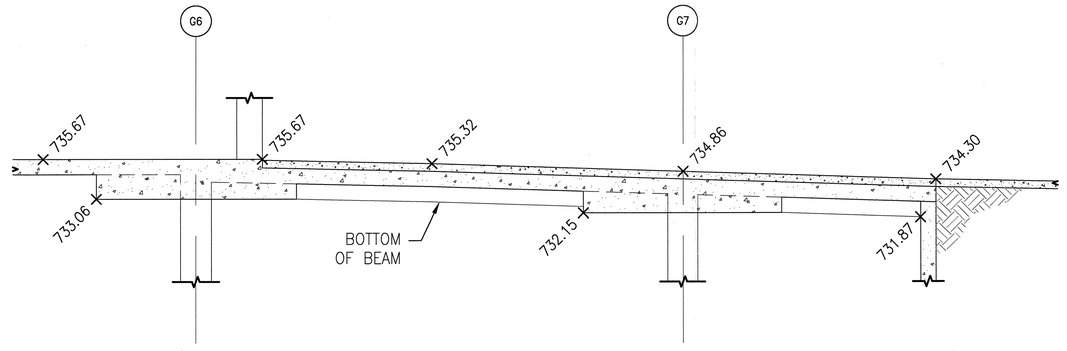

Partial First Floor Slab Section — Scale 1/8" = 1'-0" — 2

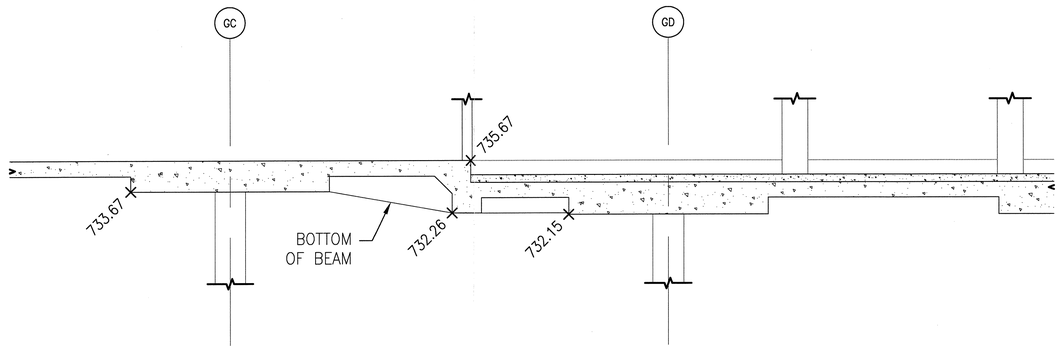

Partial First Floor Slab Section — Scale 1/8" = 1'-0" — 5

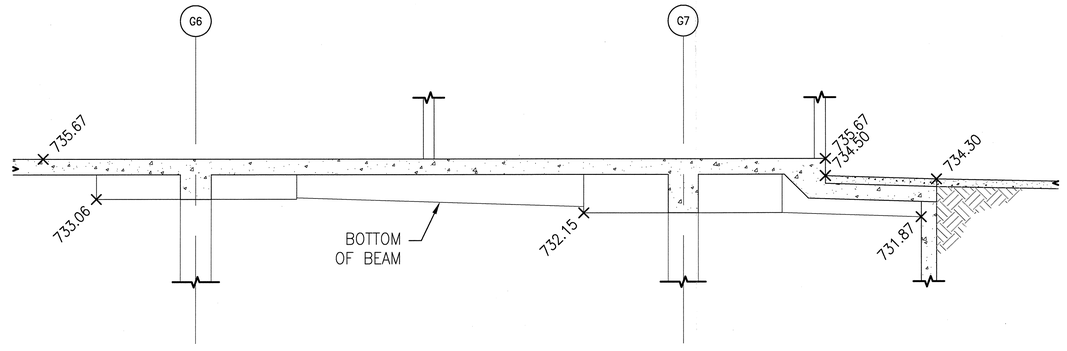

Partial First Floor Slab Section — Scale 1/8" = 1'-0" — 1

WWC OT
Widom Wein Cohen O'Leary Terasawa
3130 Wilshire Boulevard
Sixth Floor
Santa Monica, California 90403
T (310) 828-0040
F (310) 453-9432
www.wwcot.com
Inland Empire
Palm Springs
Moorpark
Shanghai, China

RECEIVED
10:08 am, Aug 14, 2008
FRAMEMAX

Building Department Submittal: June 1, 2007
Issued For Bid: ———
Issued For Construction: January 29, 2008

22 06-22-2008 BULLETIN #22

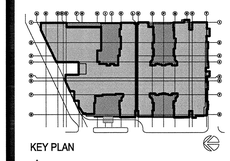

KEY PLAN

RECEIVED
JUN 23 2008
SUFFOLK CONSTRUCTION

Project:
Jewish Home for The Aging
FOUNTAINVIEW AT EISENBERG VILLAGE
6440 Wilbur Ave
Reseda, CA. 91335

JEWISH HOME
JEWISH HOME FOR THE AGING
18855 Victory Blvd.
Reseda, CA 91335
Project Number: 04206.00

GROUND FLOOR SLAB SECTIONS

Date: 01/21/2008
Drawn By: ———
Checked By: ———

A2.1.0-C
Sheet No.

File Path & Name: F:\PROJECTS\04206-00\A-CD\SHEETS\A2.1.0-C.DWG
© WWCOT 2006 Jun 20, 2008 - 03:45 pm

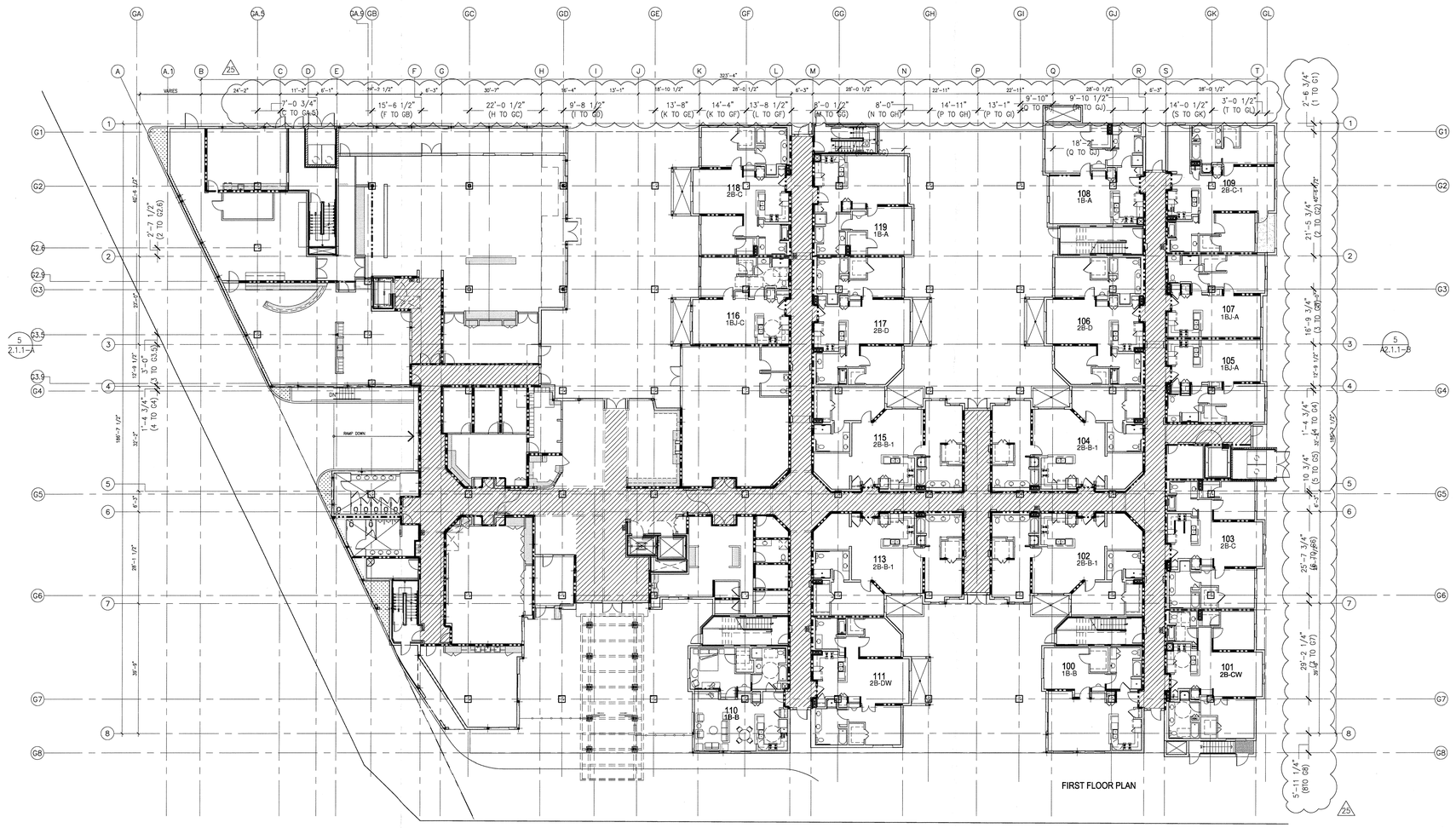

FOR WALL SECTIONS FOR BALCONY CONSTRUCTION, SEE A5.01–A5.04.

FOR UNIT PLANS FOR UNIT DIMENSIONS, SPECIFIC KEY NOTING, DOOR AND WINDOW TYPES, SEE FOLLOWING:

FOR UNIT 1B–A SEE 7/A7.0.1

FOR UNIT 1BJ–B+DEN SEE 13/A7.0.1

FOR UNIT 1BJ–A SEE 15/A7.0.1

FOR UNIT 1BJ–C SEE 5/A7.0.1

FOR UNIT 1B–B SEE 5/A7.0.2

FOR UNIT 1B–BW SEE 15/A7.0.6

FOR UNIT 1B–C SEE 15/A7.0.2

FOR UNIT 1B–CW SEE 5/A7.0.3

FOR UNIT 1B–D SEE 13/A7.0.2

FOR UNIT 1B–E SEE 7/A7.0.2

FOR UNIT 1B–F SEE 5/A7.0.3

FOR UNIT 1B–G SEE 15/A7.0.3

FOR UNIT 1B–H SEE 13/A7.0.3

FOR UNIT 2B–A SEE 15/A7.0.4

FOR UNIT 2B–B & 2B–B–1 SEE 13/A7.0.4

FOR UNIT 2B–B TOWER SEE 5/A7.0.4

FOR UNIT 2B–C SEE 15/A7.0.5

FOR UNIT 2B–C–1 SEE 7/A7.0.4

FOR UNIT 2B–CW SEE 7/A7.0.6

FOR UNIT 2B–D & DW SEE 13/A7.0.5

FOR UNIT 2B–E SEE 7/A7.0.5

FOR UNIT 2B–F SEE 5/A7.0.5

FOR UNIT 2B–G SEE 5/A7.0.6

LEGEND:

NOTE: U.O.N. ALL INTERIOR WALLS TO BE HOUR RATED WALLS. SEE WALL TYPE SCHEDULE ON SHEET #A8.2.1 AND SHEET #A8.2.2

TWO HOUR RATED WALL. SEE WALL TYPE SCHEDULE ON SHEET #A8.2.1 AND SHEET #A8.2.2

DRAFT STOP LOCATIONS

GROUND FLOOR PLAN — Scale 1/16" = 1'-0" (5)

KEY NOTES — Scale X" = 1'-0" (1)

WWCOT
Widom Wein Cohen O'Leary Terasawa

3130 Wilshire Boulevard
Sixth Floor
Santa Monica, California 90403
T (310) 828-0040
F (310) 453-9432
www.wwcot.com

Inland Empire
Palm Springs
Moorpark
Shanghai, China

RECEIVED
10:08 am, Aug 14, 2008
FRAMEMAX

Building Department
Submittal: June 1, 2007
Issued For Bid:
Issued For Construction: January 29, 2008

25 06-26-2008 COLUMN GRID DIMENSIONS

RECEIVED
JUN 26 2008
SUFFOLK CONSTRUCTION

KEY PLAN

Project:
Jewish Home for The Aging
FOUNTAINVIEW AT EISENBERG VILLAGE
6440 Wilbur Ave
Reseda, CA. 91335

JEWISH HOME
JEWISH HOME FOR THE AGING
18855 Victory Blvd.
Reseda, CA 91335
Project Number: 04206.00

OVERALL GROUND FLOOR PLAN

Date: 01/21/2008
Drawn By:
Checked By:

A2.1.1
Sheet No.

File Path & Name: F:\PROJECTS\04206-00\A-CD\SHEETS\A2.1.1.DWG
© WWCOT 2006 Jun 27, 2008 - 11:23 am

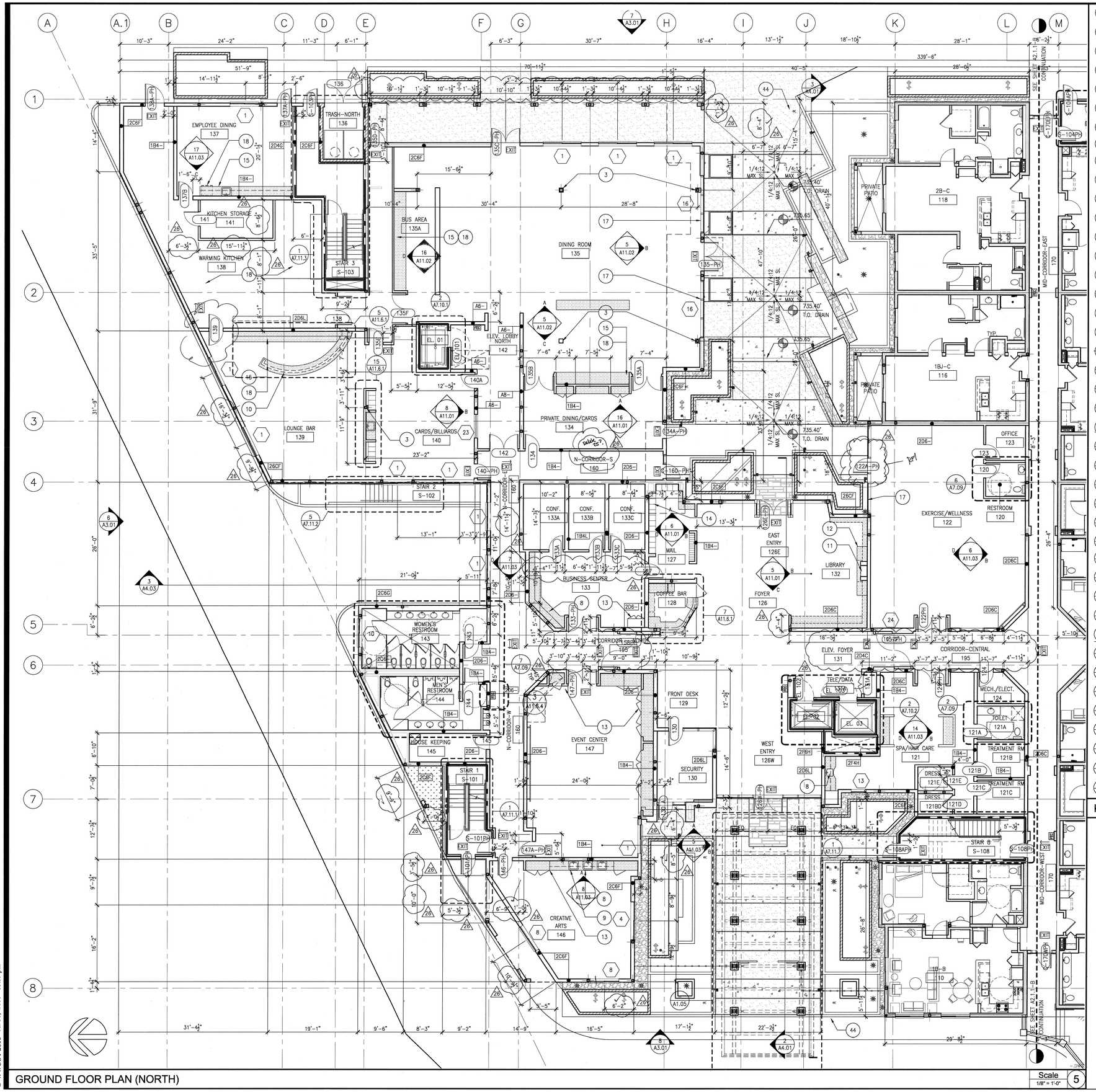

GROUND FLOOR PLAN (NORTH)

Scale 1/8" = 1'-0" 5

1. PLANTER, SEE LANDSCAPE FOR INFORMATION AND DETAILS
2. STONE PAVING, SEE LANDSCAPE FOR ADDITIONAL INFORMATION AND DETAILS
3. STEEL COLUMN, SEE STRUCTURAL PLANS FOR ADDITIONAL INFORMATION, TYP.
4. STEEL HANDRAIL, SEE ENLARGED STAIR DETAILS FOR ADDITIONAL INFORMATION
5. STEEL GUARDRAIL, SEE ENLARGED STAIR DETAILS FOR ADDITIONAL INFORMATION
6. PASSENGER ELEVATOR, SEE SPECIFICATIONS FOR TYPE AND MODEL
7. SERVICE ELEVATOR, SEE SPECIFICATIONS FOR TYPE AND MODEL
8. COUNTERTOP, SEE INTERIOR ELEVATIONS FOR FINISH AND DETAILS
9. STAINLES STEEL SINK, SEE INTERIOR ELEVATIONS AND PLUMBING PLANS FOR FIXTURE SPECIFICATIONS TYPE AND MODEL
10. BUILT IN BAR, SEE INTERIOR ELEVATION AND FINISH PLANS FOR TYPE AND DETAILS
11. ELECTRIC FIREPLACE, SEE SPECIFICATIONS
12. STONE HEARTH, SEE FINISH PLANS
13. BUILT-IN CABINETRY, SEE INTERIOR ELEVATIONS
14. BUILT-IN MAIL BOXES, SEE INTERIOR ELEVATIONS
15. COUNTERTOP AND SINK, SEE PLUMBING AND INTERIOR ELEVATION PLANS
16. WOOD RAILING, SEE INTERIOR ELEVATIONS
17. ALUMINUM STORE FRONT SYSTEM, SEE WINDOW SCHEDULE
18. KITCHEN EQUIPMENT, SEE FOOD SERVICE PLANS AND SPECIFICATIONS
19. REFRIGERATOR, SEE PROJECT MANUAL FOR RESIDENTIAL APPLIANCE SPECIFICATIONS
20. BUILDING LINE ABOVE, TYP.
21. PRE-FABRICATED CONCRETE FILLED PAN TREAD AND LANDINGS METAL STAIRS, SEE ENLARGED STAIR PLANS, TYP.
22. REINFORCED CONCRETE STAIRS, SEE STRUCTURAL DRAWINGS AND DETAIL 9,11,12/A7.11.2
23. WALL MOUNTED HANDRAIL
24. CONCRETE RETAINING WALL, SEE SLAB AND STRUCTURAL FOUNDATION PLANS FOR ADDITIONAL INFORMATION
25. CMU RETAINING WALL, SEE SLAB AND STRUCTURAL FOUNDATION PLANS FOR ADDITIONAL INFORMATION
26. W.I. FENCE OVER CMU WALL
27. GREEN SCREEN ANCHORED IN CMU WALL, SEE LANDSCAPE DRAWINGS
28. CONCRETE CURB AND WALK, SEE SLAB PLAN, TYP.
29. REINFORCED CONCRETE COLUMN, SEE STRUCTURAL DRAWINGS FOR SIZE AND DETAILS, TYP.
30. 6" CONCRETE SLAB, SEE STRUCTURAL DRAWINGS FOR SPECIFICATIONS AND DETAILS, TYP.
31. 24" FIXED THEATER SEATING, SEE SPECIFICATIONS, TYP.
32. CHAIN LINK STORAGE CAGE WITH LOCK AND KEY
33. BALCONY RAILING, SEE SHEET A6.5.3
34. AREA EMERGENCY DRAIN, SEE PLUMBING
35. TRENCH DRAIN, SEE PLUMBING AND CIVIL
36. CONCRETE RAMP WITH MEDIUM BROOM FINISH
37. ROLL DOWN SECURITY GRILLE
38. STANDING SEAM METAL ENTRY CANOPY ROOFING
39. DEK-O-TEX DECKING FINISH, SLOPE TO DRAIN, TYP.
40. GARAGE VENTILATION SHAFT
41. DRYWALL PLANT ON
42. JULIETTE BALCONY SEE SHEET A6.5.3
43. PAINTED 12"X15"X72" METAL LOCKER (2-TIER)
44. EXPANSION JOINT
45. GRADE BEAM ABOVE, SEE STRUCTURAL

KEY NOTES Scale 2

WWC OT
Widom Wein Cohen O'Leary Terasawa

3130 Wilshire Boulevard
Sixth Floor
Santa Monica, California 90403
T (310) 828-0040
F (310) 453-9432
www.wwcot.com

Inland Empire
Palm Springs
Moorpark
Shanghai, China

RECEIVED
10:08 am, Aug 14, 2008
FRAMEMAX

Building Department Submittal: June 1, 2007
Issued For Bid:
Issued For Construction: January 29, 2008

26 07-25-2008 ADDED DIMENSIONS

KEY PLAN

RECEIVED
JUL 31 2009
SUFFOLK CONSTRUCTION

Project:
Jewish Home for The Aging
FOUNTAINVIEW AT EISENBERG VILLAGE

6440 Wilbur Ave
Reseda, CA. 91335

JEWISH HOME FOR THE AGING
18855 Victory Blvd.
Reseda, CA 91335

Project Number: 04206.00

GROUND FLOOR PLAN (NORTH)

Date: 01/21/2008
Drawn By:
Checked By:

A2.1.1-A
Sheet No.

File Path & Name: F:\PROJECTS\04206-00\A-CD\SHEETS\A2.1.1-A.DWG
© WWCOT 2006 Jul 30, 2008 - 05:59 pm

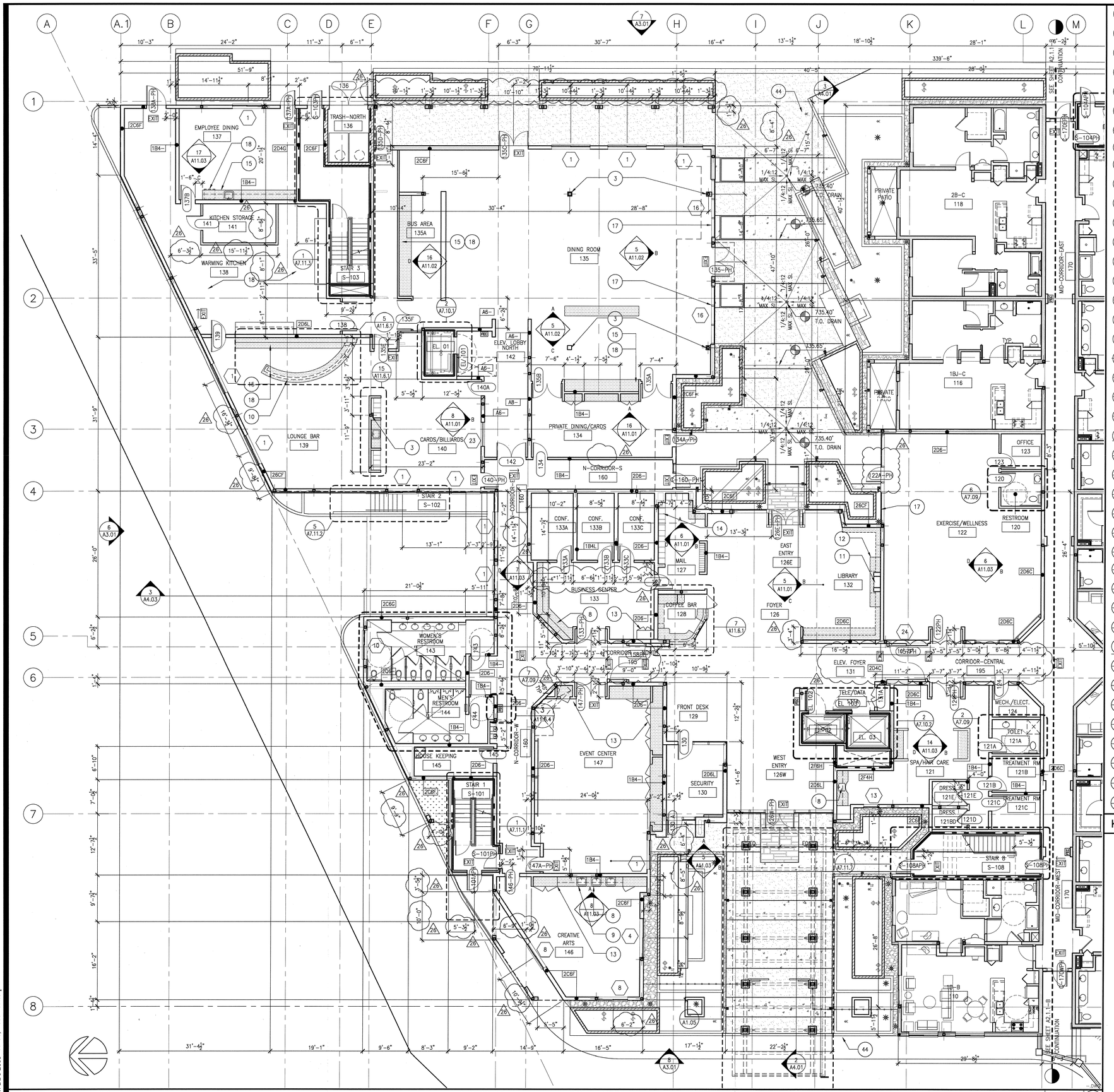

KEY NOTES

1	~~PLANTER, SEE LANDSCAPE FOR INFORMATION AND DETAILS~~
2	~~STONE PAVING, SEE LANDSCAPE FOR ADDITIONAL INFORMATION AND DETAILS~~
3	STEEL COLUMN, SEE STRUCTURAL PLANS FOR ADDITIONAL INFORMATION, TYP.
4	~~STEEL HANDRAIL, SEE ENLARGED STAIR DETAILS FOR ADDITIONAL INFORMATION~~
5	~~STEEL GUARDRAIL, SEE ENLARGED STAIR DETAILS FOR ADDITIONAL INFORMATION~~
6	~~PASSENGER ELEVATOR, SEE SPECIFICATIONS FOR TYPE AND MODEL~~
7	~~SERVICE ELEVATOR, SEE SPECIFICATIONS FOR TYPE AND MODEL~~
8	COUNTERTOP, SEE INTERIOR ELEVATIONS FOR FINISH AND DETAILS
9	STAINLES STEEL SINK, SEE INTERIOR ELEVATIONS AND PLUMBING PLANS FOR FIXTURE SPECIFICATIONS TYPE AND MODEL
10	BUILT IN BAR, SEE INTERIOR ELEVATION AND FINISH PLANS FOR TYPE AND DETAILS
11	ELECTRIC FIREPLACE, SEE SPECIFICATIONS
12	STONE HEARTH, SEE FINISH PLANS
13	BUILT–IN CABINETRY, SEE INTERIOR ELEVATIONS
14	BUILT–IN MAIL BOXES, SEE INTERIOR ELEVATIONS
15	COUNTERTOP AND SINK, SEE PLUMBING AND INTERIOR ELEVATION PLANS
16	~~WOOD RAILING, SEE INTERIOR ELEVATIONS~~
17	ALUMINUM STORE FRONT SYSTEM, SEE WINDOW SCHEDULE
18	KITCHEN EQUIPMENT, SEE FOOD SERVICE PLANS AND SPECIFICATIONS
19	~~REFRIGERATOR, SEE PROJECT MANUAL FOR RESIDENTIAL APPLIANCE SPECIFICATIONS~~
20	~~BUILDING LINE ABOVE, TYP.~~
21	~~PRE–FABRICATED CONCRETE FILLED PAN TREAD AND LANDINGS METAL STAIRS, SEE ENLARGED STAIR PLANS, TYP.~~
22	~~REINFORCED CONCRETE STAIRS, SEE STRUCTURAL DRAWINGS AND DETAIL 9,11,12/A7.11.2~~
23	WALL MOUNTED HANDRAIL
24	~~CONCRETE RETAINING WALL, SEE SLAB AND STRUCTURAL FOUNDATION PLANS FOR ADDITIONAL INFORMATION~~
25	~~CMU RETAINING WALL, SEE SLAB AND STRUCTURAL FOUNDATION PLANS FOR ADDITIONAL INFORMATION~~
26	~~W.I. FENCE OVER CMU WALL~~
27	~~GREEN SCREEN ANCHORED IN CMU WALL, SEE LANDSCAPE DRAWINGS~~
28	~~CONCRETE CURB AND WALK, SEE SLAB PLAN, TYP.~~
29	~~REINFORCED CONCRETE COLUMN, SEE STRUCTURAL DRAWINGS FOR SIZE AND DETAILS, TYP.~~
30	~~8" CONCRETE SLAB, SEE STRUCTURAL DRAWINGS FOR SPECIFICATIONS AND DETAILS, TYP.~~
31	~~24" FIXED THEATER SEATING, SEE SPECIFICATIONS, TYP.~~
32	~~CHAIN LINK STORAGE CAGE WITH LOCK AND KEY~~
33	~~BALCONY RAILING, SEE SHEET A6.5.3~~
34	AREA EMERGENCY DRAIN, SEE PLUMBING
35	~~TRENCH DRAIN, SEE PLUMBING~~ AND CIVIL
36	~~CONCRETE RAMP WITH MEDIUM BROOM FINISH~~
37	~~ROLL DOWN SECURITY GRILLE~~
38	~~STANDING SEAM METAL ENTRY CANOPY ROOFING~~
39	~~DEX–O–TEX DECKING FINISH, SLOPE TO DRAIN,~~ TYP.
40	~~GARAGE VENTILATION SHAFT~~
41	~~DRYWALL PLANT ON~~
42	~~JULIETTE BALCONY SEE SHEET A6.5.3~~
43	PAINTED 12"X15"X72" METAL LOCKER (2–TIER)
44	EXPANSION JOINT
45	GRADE BEAM ABOVE, SEE STRUCTURAL

KEY NOTES — Scale 2

GROUND FLOOR PLAN (NORTH) — Scale 1/8" = 1'-0" 5

WWC OT
Widom Wein Cohen O'Leary Terasawa

3130 Wilshire Boulevard
Sixth Floor
Santa Monica, California 90403
T (310) 828-0040
F (310) 453-9432
www.wwcot.com

Inland Empire
Palm Springs
Moorpark
Shanghai, China

RECEIVED
10:08 am, Aug 14, 2008
FRAMEMAX

Building Department Submittal: June 1, 2007
Issued For Bid:
Issued For Construction: January 29, 2008

26 07-25-2008 ADDED DIMENSIONS

KEY PLAN

RECEIVED
JUL 31 2008
SUFFOLK CONSTRUCTION

Project:
Jewish Home for The Aging
FOUNTAINVIEW AT EISENBERG VILLAGE
6440 Wilbur Ave
Reseda, CA. 91335

JEWISH HOME
JEWISH HOME FOR THE AGING
18855 Victory Blvd.
Reseda, CA 91335

Project Number: 04206.00

GROUND FLOOR PLAN (NORTH)

Date: 01/21/2008
Drawn By:
Checked By:

A2.1.1-A
Sheet No.

File Path & Name: F:\PROJECTS\04206-00\A-CD\SHEETS\A2.1.1-A.DWG
© WWCOT 2006 Jul 30, 2008 - 03:59 pm

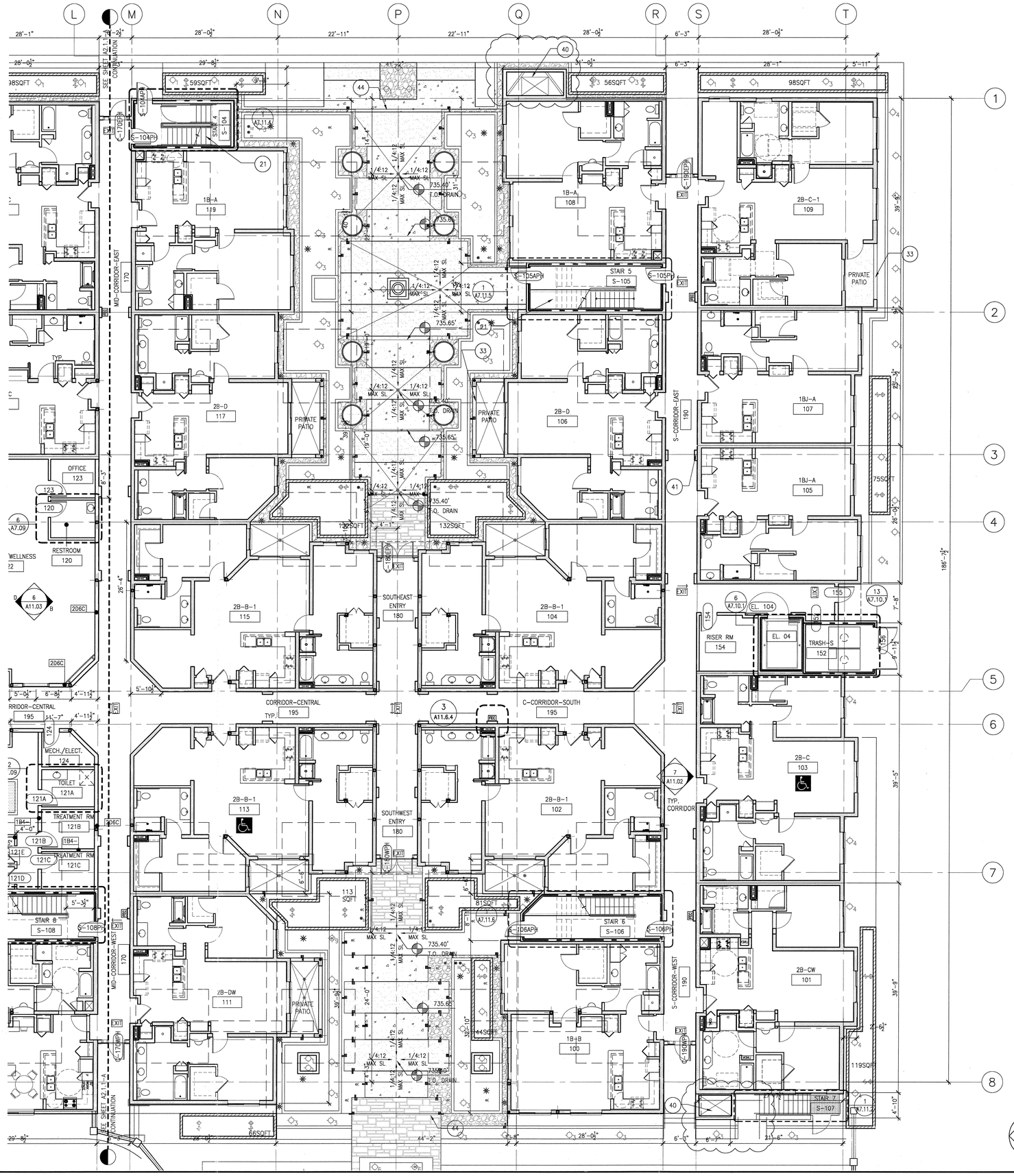

GROUND FLOOR PLAN (SOUTH)

Scale 1/8" = 1'-0" 2

1 PLANTER, SEE LANDSCAPE FOR INFORMATION AND DETAILS
2 STONE PAVING, SEE LANDSCAPE FOR ADDITIONAL INFORMATION AND DETAILS
3 STEEL COLUMN, SEE STRUCTURAL PLANS FOR ADDITIONAL INFORMATION, TYP.
4 STEEL HANDRAIL, SEE ENLARGED STAIR DETAILS FOR ADDITIONAL INFORMATION
5 STEEL GUARDRAIL, SEE ENLARGED STAIR DETAILS FOR ADDITIONAL INFORMATION
6 PASSENGER ELEVATOR, SEE SPECIFICATIONS FOR TYPE AND MODEL
7 SERVICE ELEVATOR, SEE SPECIFICATIONS FOR TYPE AND MODEL
8 COUNTERTOP, SEE INTERIOR ELEVATIONS FOR FINISH AND DETAILS
9 STAINLES STEEL SINK, SEE INTERIOR ELEVATIONS AND PLUMBING PLANS FOR FIXTURE SPECIFICATIONS TYPE AND MODEL
10 BUILT IN BAR, SEE INTERIOR ELEVATION AND FINISH PLANS FOR TYPE AND DETAILS
11 ELECTRIC FIREPLACE, SEE SPECIFICATIONS
12 STONE HEARTH, SEE FINISH PLANS
13 BUILT-IN CABINETRY, SEE INTERIOR ELEVATIONS
14 BUILT-IN MAIL BOXES, SEE INTERIOR ELEVATIONS
15 COUNTERTOP AND SINK, SEE PLUMBING AND INTERIOR ELEVATION PLANS
16 WOOD RAILING, SEE INTERIOR ELEVATIONS
17 ALUMINUM STORE FRONT SYSTEM, SEE WINDOW SCHEDULE
18 KITCHEN EQUIPMENT, SEE FOOD SERVICE PLANS AND SPECIFICATIONS
19 REFRIGERATOR, SEE PROJECT MANUAL FOR RESIDENTIAL APPLIANCE SPECIFICATIONS
20 BUILDING LINE ABOVE, TYP.
21 PRE-FABRICATED CONCRETE FILLED PAN TREAD AND LANDINGS METAL STAIRS, SEE ENLARGED STAIR PLANS, TYP.
22 REINFORCED CONCRETE STAIRS, SEE STRUCTURAL DRAWINGS AND DETAIL 9,11,12/A7.11.2
23 WALL MOUNTED HANDRAIL
24 CONCRETE RETAINING WALL, SEE SLAB AND STRUCTURAL FOUNDATION PLANS FOR ADDITIONAL INFORMATION
25 CMU RETAINING WALL, SEE SLAB AND STRUCTURAL FOUNDATION PLANS FOR ADDITIONAL INFORMATION
26 W.I. FENCE OVER CMU WALL
27 GREEN SCREEN ANCHORED IN CMU WALL, SEE LANDSCAPE DRAWINGS
28 CONCRETE CURB AND WALK, SEE SLAB PLAN, TYP.
29 REINFORCED CONCRETE COLUMN, SEE STRUCTURAL DRAWINGS FOR SIZE AND DETAILS, TYP.
30 6" CONCRETE SLAB, SEE STRUCTURAL DRAWINGS FOR SPECIFICATIONS AND DETAILS, TYP.
31 24" FIXED THEATER SEATING, SEE SPECIFICATIONS, TYP.
32 CHAIN LINK STORAGE CAGE WITH LOCK AND KEY
33 BALCONY RAILING, SEE SHEET A6.5.3
34 AREA EMERGENCY DRAIN, SEE PLUMBING
35 TRENCH DRAIN, SEE PLUMBING AND CIVIL
36 CONCRETE RAMP WITH MEDIUM BROOM FINISH
37 ROLL DOWN SECURITY GRILLE
38 STANDING SEAM METAL ENTRY CANOPY ROOFING
39 DEX-O-TEX DECKING FINISH, SLOPE TO DRAIN, TYP.
40 GARAGE VENTILATION SHAFT SEE STRUCTURAL FOR DIAGONAL BRACING
41 DRYWALL PLANT ON
42 JULIETTE BALCONY SEE SHEET A6.5.3
43 PAINTED 12"X15"X72" METAL LOCKER (2-TIER)
44 EXPANSION JOINT
45 GRADE BEAM ABOVE, SEE STRUCTURAL

KEY NOTES Scale 2

WWC OT
Widom Wein Cohen O'Leary Terasawa
3130 Wilshire Boulevard
Sixth Floor
Santa Monica, California 90403
T (310) 828-0040
F (310) 453-9432
www.wwcot.com
Inland Empire
Palm Springs
Moorpark
Shanghai, China

RECEIVED
10:08 am, Aug 14, 2008
FRAMEMAX

Building Department Submittal: June 1, 2007
Issued For Bid:
Issued For Construction: January 29, 2008

28 08-01-2008 SHAFT AND STAIR REVISIONS

KEY PLAN

RECEIVED
AUG 04 2008
SUFFOLK CONSTRUCTION

Project:
Jewish Home for The Aging
FOUNTAINVIEW AT EISENBERG VILLAGE
6440 Wilbur Ave
Reseda, CA. 91335

JEWISH HOME FOR THE AGING
18855 Victory Blvd.
Reseda, CA 91335
Project Number: 04206.00

GROUND FLOOR PLAN (SOUTH)

Date: 01/21/2008
Drawn By:
Checked By:

A2.1.1-B
Sheet No.

File Path & Name: F:\PROJECTS\04206-000A-CD\SHEETS\A2.1.1-B.DWG
© WWCOT 2006 Aug 01, 2008 - 04:29 pm

NOTES:

1. DIMENSIONS IN PARATHESIS ARE CORRECT. NO CHANGE.
2. CLOUDED DIMENSIONS HAVE BEEN REVISED TO MATCH ARCHITECTURAL FLOOR PLANS.

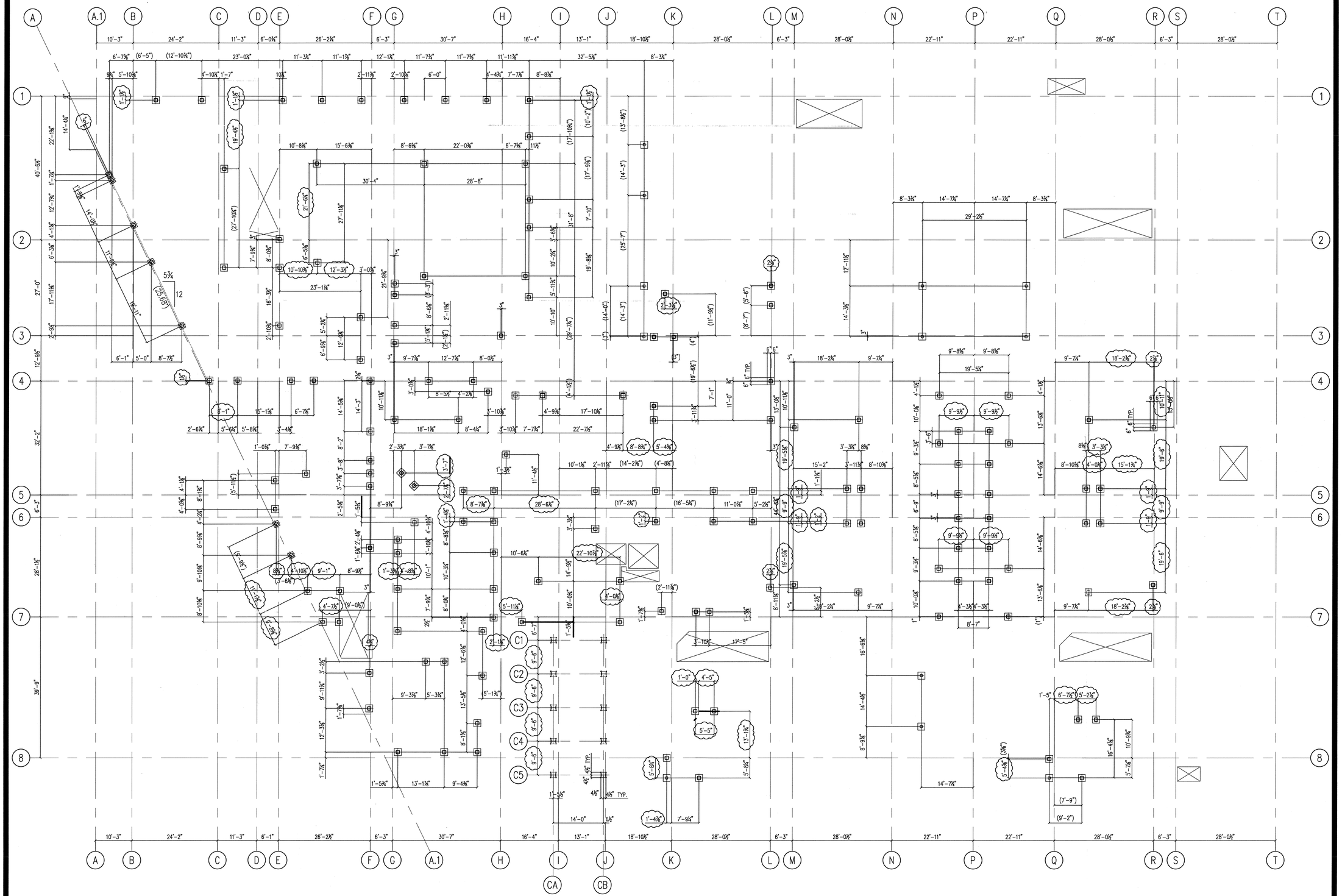

WWC OT
Widom Wein Cohen O'Leary Terasawa

3130 Wilshire Boulevard
Sixth Floor
Santa Monica, California 90403
T (310) 828-0040
F (310) 453-9432
www.wwcot.com

Inland Empire
Palm Springs
Moorpark
Shanghai, China

RECEIVED
10:08 am, Aug 14, 2008
FRAMEMAX

Building Department Submittal: June 1, 2007
Issued For Bid: ———
Issued For Construction: January 29, 2008

21 06-24-2008 BULLETIN #21 DIMENSIONED FRAMING PLAN

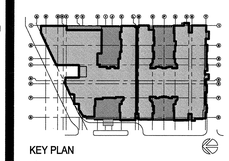

KEY PLAN

RECEIVED
JUN 25 2008
SUFFOLK CONSTRUCTION

Project:
Jewish Home for The Aging
FOUNTAINVIEW AT EISENBERG VILLAGE
6440 Wilbur Ave
Reseda, CA. 91335

JEWISH HOME
JEWISH HOME FOR THE AGING
18855 Victory Blvd.
Reseda, CA 91335
Project Number: 04206.00

GROUND FLOOR FRAMING PLAN

Date: 01/21/2008
Drawn By: ———
Checked By: ———

A2.1.1-C
Sheet No.

GROUND FLOOR FRAMING PLAN

Scale 3/32" = 1'-0"

File Path & Name: F:\PROJECTS\04206-00\A-CD\SHEETS\A2.1.1-C.DWG
© WWCOT 2006 - Jan 24, 2008 - 09:21 am

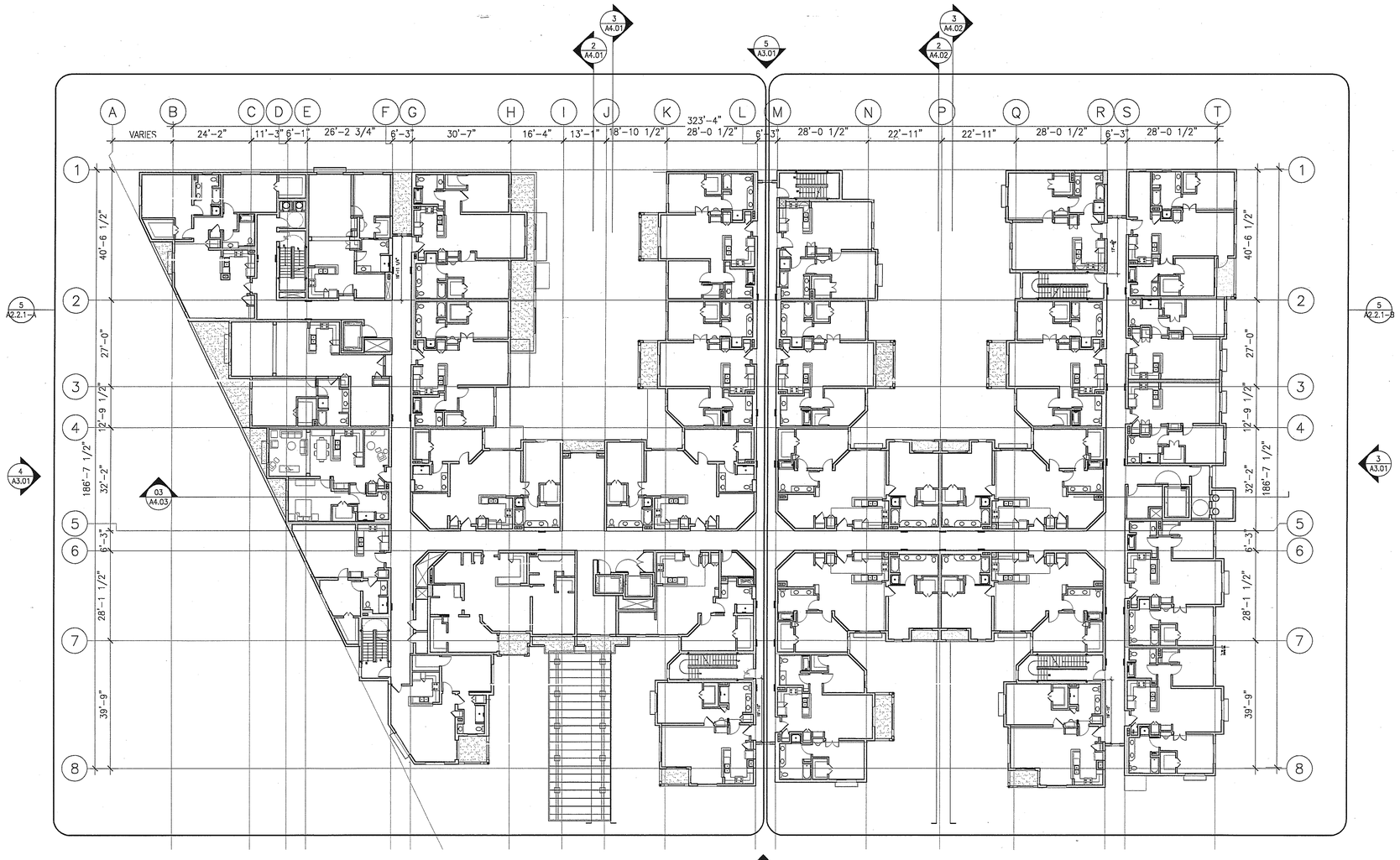

1. ALL DIMENSIONS ARE SHOWN TO FACE OF STUD OR FACE OF FRAMING. ALL STUDS ARE 4" DEEP IN NON-BEARING WALLS AND 6" DEEP IN BEARING WALLS.

2. ALL EXTERIOR WALLS, CORRIDOR WALLS, UNIT SEPARATION WALLS, AND INTERIOR BEARING WALLS TO BE OF 2-HOUR FIRE-RESISTIVE CONSTRUCTION.

3. ALL SHAFT WALLS TO BE OF 2-HOUR FIRE-RESISTIVE CONSTRUCTION.

4. SEE UNIT PLANS FOR UNIT DIMENSIONS AND SPECIFIC KEY NOTING

5. SEE UNIT PLANS FOR UNIT DOOR & WINDOW TYPES.

6. 6"X6" CONC. CURB AT EXTERIOR PERIMETER WALLS ON GROUND FLOOR STRUCTURAL SLAB.

7. SEE WALL SECTIONS FOR BALCONY CONSTRUCTION.

TRUE NORTH
PLAN NORTH

SECOND FLOOR PLAN — Scale 1/16" = 1'-0" (5)

KEY NOTES — Scale X" = 1'-0" (1)

WWC OT
Widom Wein Cohen O'Leary Terasawa

3130 Wilshire Boulevard
Sixth Floor
Santa Monica, California 90403
T (310) 828-0040
F (310) 453-9432
www.wwcot.com

Inland Empire
Palm Springs
Moorpark
Shanghai, China

RECEIVED
10:08 am, Aug 14, 2008
FRAMEMAX

Building Department Submittal: June 1, 2007
Issued For Bid: _____
Issued For Construction: _____



KEY PLAN

Project:
Jewish Home for The Aging
FOUNTAINVIEW AT EISENBERG VILLAGE
6440 Wilbur Ave
Reseda, CA. 91335

JEWISH HOME FOR THE AGING
18855 Victory Blvd.
Reseda, CA 91335
Project Number: 04206.00

OVERALL SECOND FLOOR PLAN

Date: 04/05/2007
Drawn By: _____
Checked By: _____

A2.2.1
Sheet No.

File Path & Name: F:\PROJECTS\04206.00\A-CD\SHEETS\A2.2.1.DWG
© WWCOT 2006 May 28, 2007 - 03:39 pm

RECEIVED BY SUFFOLK ON 06/01/07

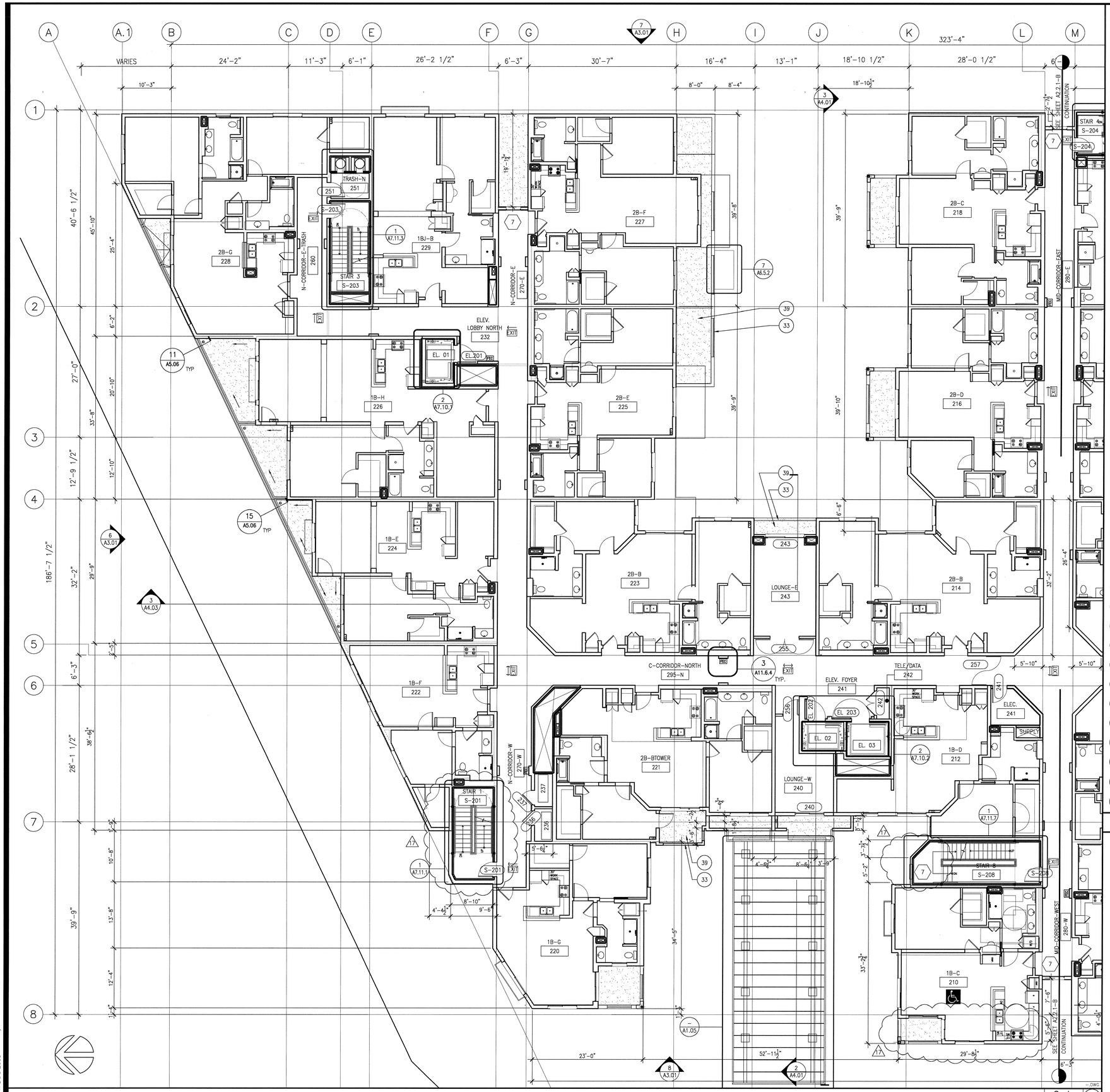

SECOND FLOOR PLAN (NORTH)

Scale 1/8" = 1'-0" 5

1. PLANTER, SEE LANDSCAPE FOR INFORMATION AND DETAILS
2. STONE PAVING, SEE LANDSCAPE FOR ADDITIONAL INFORMATION AND DETAILS
3. STEEL COLUMN, SEE STRUCTURAL PLANS FOR ADDITIONAL INFORMATION, TYP.
4. STEEL HANDRAIL, SEE ENLARGED STAIR DETAILS FOR ADDITIONAL INFORMATION
5. STEEL GUARDRAIL, SEE ENLARGED STAIR DETAILS FOR ADDITIONAL INFORMATION
6. PASSENGER ELEVATOR, SEE SPECIFICATIONS FOR TYPE AND MODEL
7. SERVICE ELEVATOR, SEE SPECIFICATIONS FOR TYPE AND MODEL
8. COUNTERTOP, SEE INTERIOR ELEVATIONS FOR FINISH AND DETAILS
9. STAINLES STEEL SINK, SEE INTERIOR ELEVATIONS AND PLUMBING PLANS FOR FIXTURE SPECIFICATIONS TYPE AND MODEL
10. BUILT IN BAR, SEE INTERIOR ELEVATION AND FINISH PLANS FOR TYPE AND DETAILS
11. ELECTRIC FIREPLACE, SEE SPECIFICATIONS
12. STONE HEARTH, SEE FINISH PLANS
13. BUILT-IN CABINETRY, SEE INTERIOR ELEVATIONS
14. BUILT-IN MAIL BOXES, SEE INTERIOR ELEVATIONS
15. COUNTERTOP AND SINK, SEE PLUMBING AND INTERIOR ELEVATION PLANS
16. WOOD RAILING, SEE INTERIOR ELEVATIONS
17. ALUMINUM STORE FRONT SYSTEM, SEE WINDOW SCHEDULE
18. KITCHEN EQUIPMENT, SEE FOOD SERVICE PLANS AND SPECIFICATIONS
19. REFRIGERATOR, SEE PROJECT MANUAL FOR RESIDENTIAL APPLIANCE SPECIFICATIONS
20. BUILDING LINE ABOVE, TYP.
21. PRE-FABRICATED CONCRETE FILLED PAN TREAD AND LANDINGS METAL STAIRS, SEE ENLARGED STAIR PLANS, TYP.
22. REINFORCED CONCRETE STAIRS, SEE STRUCTURAL DRAWINGS AND DETAIL 9,11,12/A7.11.2
23. WALL MOUNTED HANDRAIL
24. CONCRETE RETAINING WALL, SEE SLAB AND STRUCTURAL FOUNDATION PLANS FOR ADDITIONAL INFORMATION
25. CMU RETAINING WALL, SEE SLAB AND STRUCTURAL FOUNDATION PLANS FOR ADDITIONAL INFORMATION
26. W.I. FENCE OVER CMU WALL
27. GREEN SCREEN ANCHORED IN CMU WALL, SEE LANDSCAPE DRAWINGS
28. CONCRETE CURB AND WALK, SEE SLAB PLAN, TYP.
29. REINFORCED CONCRETE COLUMN, SEE STRUCTURAL DRAWINGS FOR SIZE AND DETAILS, TYP.
30. 6" CONCRETE SLAB, SEE STRUCTURAL DRAWINGS FOR SPECIFICATIONS AND DETAILS, TYP.
31. 24" FIXED THEATER SEATING, SEE SPECIFICATIONS, TYP.
32. CHAIN LINK STORAGE CAGE WITH LOCK AND KEY
33. BALCONY RAILING, SEE SHEET A6.5.3
34. AREA EMERGENCY DRAIN, SEE PLUMBING
35. TRENCH DRAIN, SEE PLUMBING AND CIVIL
36. CONCRETE RAMP WITH MEDIUM BROOM FINISH
37. ROLL DOWN SECURITY GRILLE
38. STANDING SEAM METAL ENTRY CANOPY ROOFING
39. DEX-O-TEX DECKING FINISH, SLOPE TO DRAIN, TYP.
40. GARAGE VENTILATION SHAFT
41. DRYWALL PLANT ON
42. JULIETTE BALCONY SEE SHEET A6.5.3
43. PAINTED 12"X15"X72" METAL LOCKER (2-TIER)
44. EXPANSION JOINT

KEY NOTES Scale 2

WWC OT
Widom Wein Cohen O'Leary Terasawa

3130 Wilshire Boulevard
Sixth Floor
Santa Monica, California 90403
T (310) 828-0040
F (310) 453-9432
www.wwcot.com

Inland Empire
Palm Springs
Moorpark
Shanghai, China

RECEIVED
10:08 am, Aug 14, 2008
FRAMEMAX

Building Department Submittal: June 1, 2007
Issued For Bid:
Issued For Construction: January 29, 2008

1 06-13-2008 UNIT LOCATION & STAIR WIDTH REVISIONS

KEY PLAN

RECEIVED
JUN 23 2008
SUFFOLK CONSTRUCTION

Project:
Jewish Home for The Aging
FOUNTAINVIEW AT EISENBERG VILLAGE

6440 Wilbur Ave
Reseda, CA. 91335

JEWISH HOME
JEWISH HOME FOR THE AGING
18855 Victory Blvd.
Reseda, CA 91335

Project Number: 04206.00

SECOND FLOOR PLAN (NORTH)

Date: 01/21/2008
Drawn By:
Checked By:

A2.2.1-A
Sheet No.

File Path & Name: F:\PROJECTS\04206-00\A-CD\SHEETS\A2.2.1-A.DWG
© WWCOT 2006 Jun 20, 2008 - 11:54 am

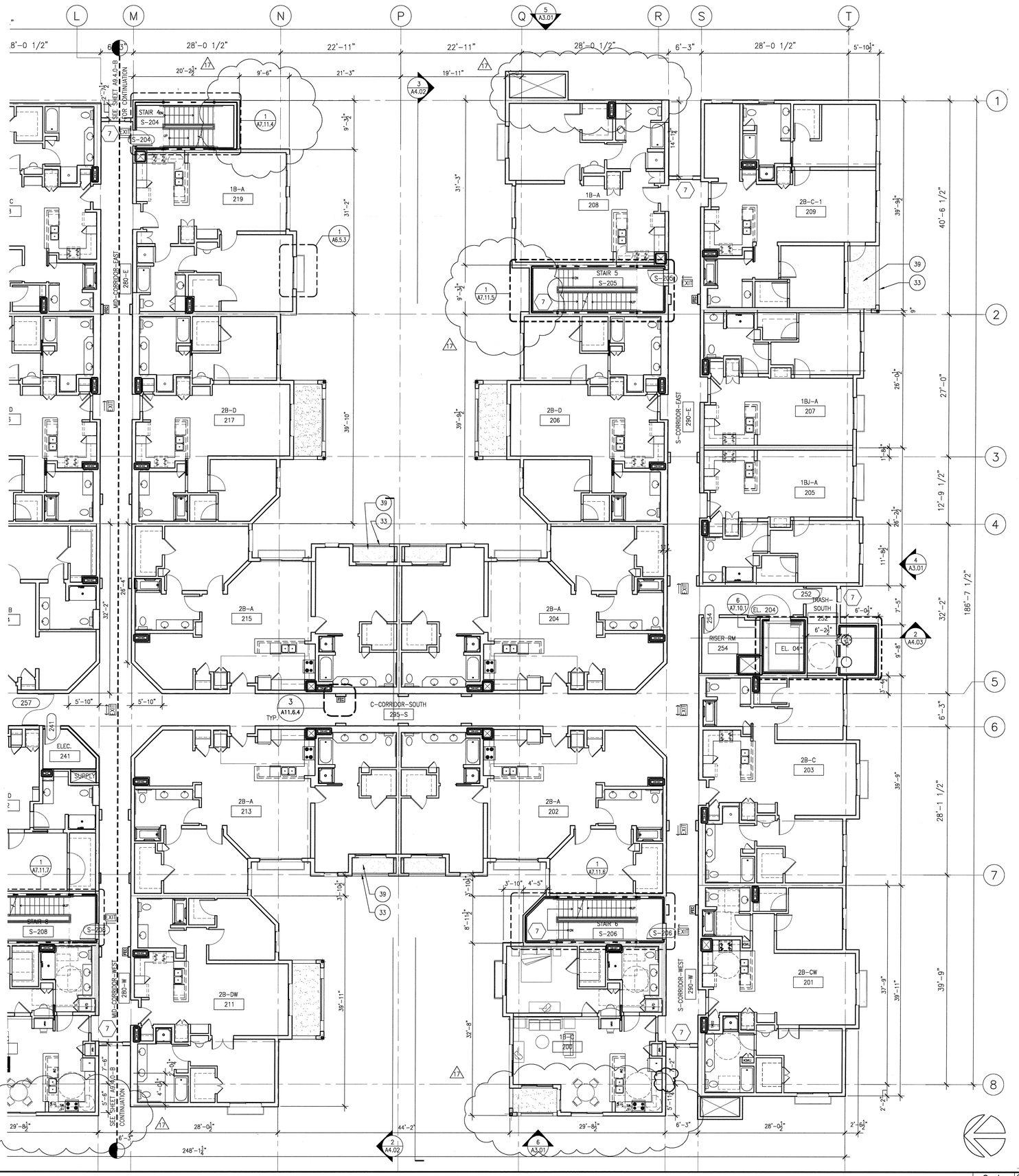

SECOND FLOOR PLAN (SOUTH)

Scale 1/8" = 1'-0" 5

...DWG

KEY NOTES

1. ~~PLANTER, SEE LANDSCAPE FOR INFORMATION AND DETAILS~~
2. ~~STONE PAVING, SEE LANDSCAPE FOR ADDITIONAL INFORMATION AND DETAILS~~
3. ~~STEEL COLUMN, SEE STRUCTURAL PLANS FOR ADDITIONAL INFORMATION, TYP.~~
4. ~~STEEL HANDRAIL, SEE ENLARGED STAIR DETAILS FOR ADDITIONAL INFORMATION~~
5. ~~STEEL GUARDRAIL, SEE ENLARGED STAIR DETAILS FOR ADDITIONAL INFORMATION~~
6. ~~PASSENGER ELEVATOR, SEE SPECIFICATIONS FOR TYPE AND MODEL~~
7. ~~SERVICE ELEVATOR, SEE SPECIFICATIONS FOR TYPE AND MODEL~~
8. ~~COUNTERTOP, SEE INTERIOR ELEVATIONS FOR FINISH AND DETAILS~~
9. ~~STAINLES STEEL SINK, SEE INTERIOR ELEVATIONS AND PLUMBING PLANS FOR FIXTURE SPECIFICATIONS TYPE AND MODEL~~
10. ~~BUILT IN BAR, SEE INTERIOR ELEVATION AND FINISH PLANS FOR TYPE AND DETAILS~~
11. ~~ELECTRIC FIREPLACE, SEE SPECIFICATIONS~~
12. ~~STONE HEARTH, SEE FINISH PLANS~~
13. ~~BUILT-IN CABINETRY, SEE INTERIOR ELEVATIONS~~
14. ~~BUILT-IN MAIL BOXES, SEE INTERIOR ELEVATIONS~~
15. ~~COUNTERTOP AND SINK, SEE PLUMBING AND INTERIOR ELEVATION PLANS~~
16. ~~WOOD RAILING, SEE INTERIOR ELEVATIONS~~
17. ~~ALUMINUM STORE FRONT SYSTEM, SEE WINDOW SCHEDULE~~
18. ~~KITCHEN EQUIPMENT, SEE FOOD SERVICE PLANS AND SPECIFICATIONS~~
19. ~~REFRIGERATOR, SEE PROJECT MANUAL FOR RESIDENTIAL APPLIANCE SPECIFICATIONS~~
20. ~~BUILDING LINE ABOVE, TYP.~~
21. ~~PRE-FABRICATED CONCRETE FILLED PAN TREAD AND LANDINGS METAL STAIRS, SEE ENLARGED STAIR PLANS, TYP.~~
22. ~~REINFORCED CONCRETE STAIRS, SEE STRUCTURAL DRAWINGS AND DETAIL 9,11,12/A7.11.2~~
23. ~~WALL MOUNTED HANDRAIL~~
24. ~~CONCRETE RETAINING WALL, SEE SLAB AND STRUCTURAL FOUNDATION PLANS FOR ADDITIONAL INFORMATION~~
25. ~~CMU RETAINING WALL, SEE SLAB AND STRUCTURAL FOUNDATION PLANS FOR ADDITIONAL INFORMATION~~
26. ~~W.I. FENCE OVER CMU WALL~~
27. ~~GREEN SCREEN ANCHORED IN CMU WALL, SEE LANDSCAPE DRAWINGS~~
28. ~~CONCRETE CURB AND WALK, SEE SLAB PLAN, TYP.~~
29. ~~REINFORCED CONCRETE COLUMN, SEE STRUCTURAL DRAWINGS FOR SIZE AND DETAILS, TYP.~~
30. ~~6" CONCRETE SLAB, SEE STRUCTURAL DRAWINGS FOR SPECIFICATIONS AND DETAILS, TYP.~~
31. ~~24" FIXED THEATER SEATING, SEE SPECIFICATIONS, TYP.~~
32. ~~CHAIN LINK STORAGE CAGE WITH LOCK AND KEY~~
33. BALCONY RAILING, SEE SHEET A6.5.3
34. ~~AREA EMERGENCY DRAIN, SEE PLUMBING~~
35. ~~TRENCH DRAIN, SEE PLUMBING AND CIVIL~~
36. ~~CONCRETE RAMP WITH MEDIUM BROOM FINISH~~
37. ~~ROLL DOWN SECURITY GRILLE~~
38. ~~STANDING SEAM METAL ENTRY CANOPY ROOFING~~
39. DEX-O-TEX DECKING FINISH, SLOPE TO DRAIN, TYP.
40. ~~GARAGE VENTILATION SHAFT~~
41. ~~DRYWALL PLANT ON~~
42. ~~JULIETTE BALCONY SEE SHEET A6.5.3~~
43. PAINTED 12"X15"X72" METAL LOCKER (2-TIER)
44. EXPANSION JOINT

Scale 2

...DWG

WWC OT
Widom Wein Cohen O'Leary Terasawa

3130 Wilshire Boulevard
Sixth Floor
Santa Monica, California 90403
T (310) 828-0040
F (310) 453-9432
www.wwcot.com

Inland Empire
Palm Springs
Moorpark
Shanghai, China

RECEIVED
10:08 am, Aug 14, 2008
FRAMEMAX

Building Department Submittal: June 1, 2007
Issued For Bid: _____
Issued For Construction: January 29, 2008

17 06-13-2008 UNIT LOCATION & STAIR WIDTH REVISIONS

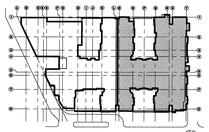

KEY PLAN

RECEIVED
JUN 23 2008
SUFFOLK CONSTRUCTION

Project:
Jewish Home for The Aging
FOUNTAINVIEW AT EISENBERG VILLAGE
6440 Wilbur Ave
Reseda, CA. 91335

BPB JEWISH HOME
JEWISH HOME FOR THE AGING
18855 Victory Blvd.
Reseda, CA 91335
Project Number: 04206.00

SECOND FLOOR PLAN (SOUTH)

Date: 01/21/2008
Drawn By:
Checked By:

A2.2.1-B
Sheet No.

File Path & Name: F:\PROJECTS\04206.00\A-CD\SHEETS\A2.2.1-B.DWG
© WWCOT 2006 Jun 20, 2008 - 11:54 am

NOTES:

1. DIMENSIONS IN PARATHESIS ARE CORRECT. NO CHANGE.
2. CLOUDED DIMENSIONS HAVE BEEN REVISED TO MATCH ARCHITECTURAL FLOOR PLANS.

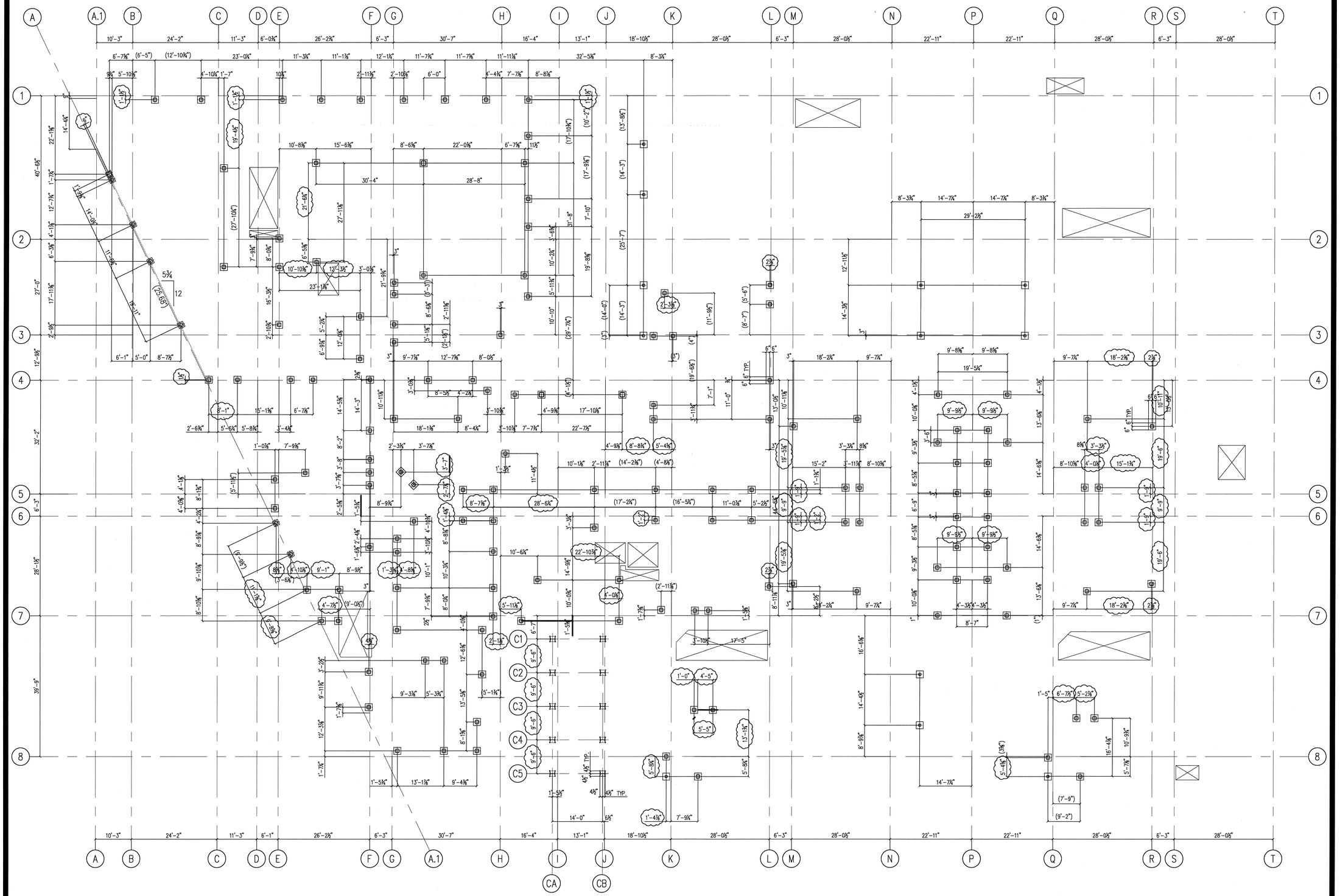

SECOND FLOOR FRAMING PLAN

Scale 3/32" = 1'-0" (1)

File Path & Name: F:\PROJECTS\04206-00\A-CD\SHEETS\A2.2.1-C.DWG
© WWCOT 2006 Jun 24, 2008 - 09:54 am

WWC OT
Widom Wein Cohen O'Leary Terasawa

3130 Wilshire Boulevard
Sixth Floor
Santa Monica, California 90403
T (310) 828-0040
F (310) 453-9432
www.wwcot.com

Inland Empire
Palm Springs
Moorpark
Shanghai, China

RECEIVED
10:08 am, Aug 14, 2008
FRAMEMAX

Building Department Submittal: June 1, 2007
Issued For Bid: ———
Issued For Construction: January 29, 2008

21 06-24-2008 BULLETIN #21 DIMENSIONED FRAMING PLAN

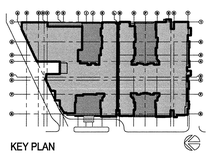

KEY PLAN

RECEIVED
JUN 25 2008
SUFFOLK CONSTRUCTION

Project:
Jewish Home for The Aging
FOUNTAINVIEW AT EISENBERG VILLAGE
6440 Wilbur Ave
Reseda, CA. 91335

JEWISH HOME
JEWISH HOME FOR THE AGING
18855 Victory Blvd.
Reseda, CA 91335
Project Number: 04206.00

2ND FLOOR FRAMING PLAN

Date: 01/21/2008
Drawn By: ———
Checked By: ———

A2.2.1-C
Sheet No.

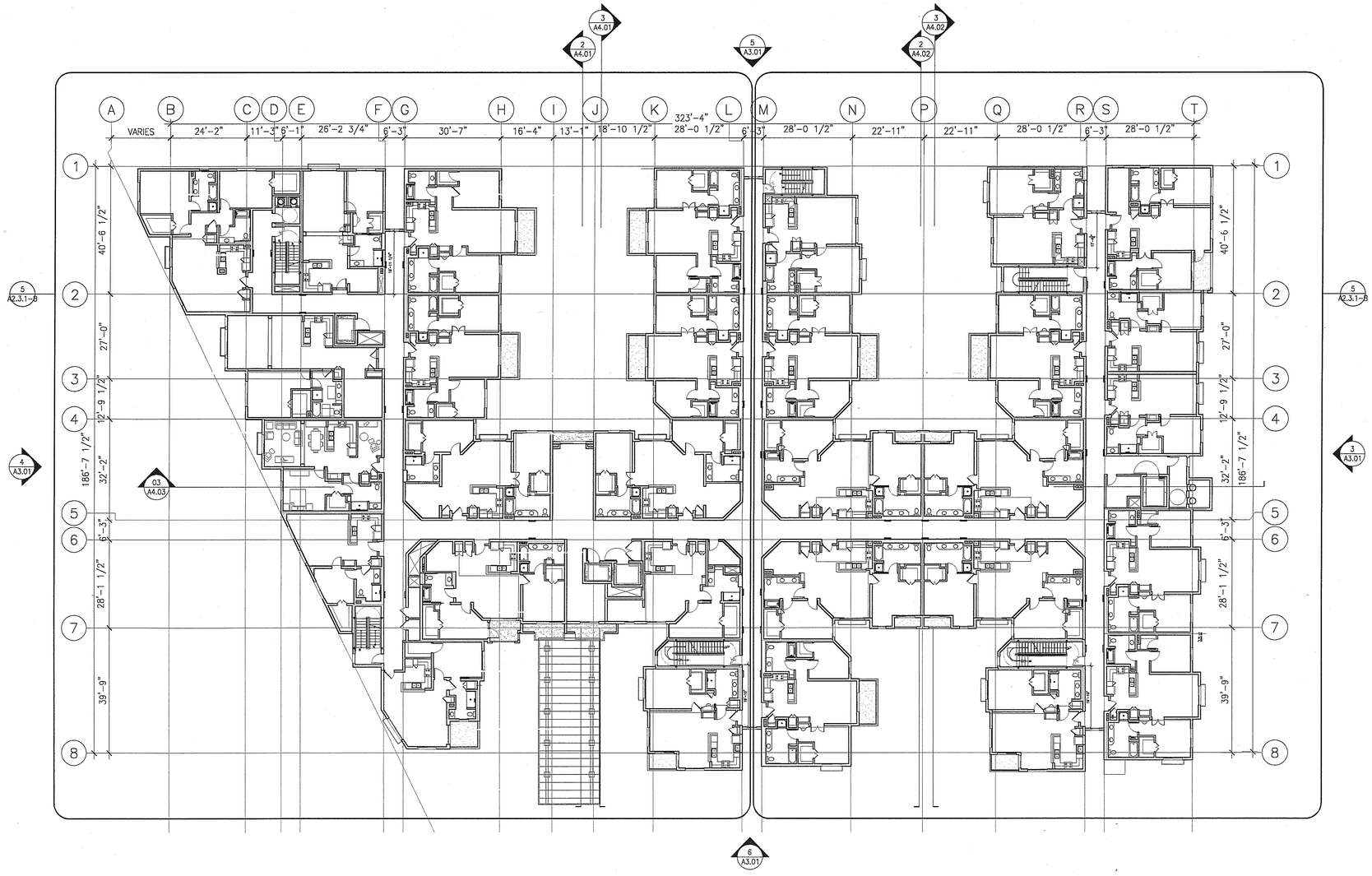

1. ALL DIMENSIONS ARE SHOWN TO FACE OF STUD OR FACE OF FRAMING. ALL STUDS ARE 4" DEEP IN NON-BEARING WALLS AND 6" DEEP IN BEARING WALLS.

2. ALL EXTERIOR WALLS, CORRIDOR WALLS, UNIT SEPARATION WALLS, AND INTERIOR BEARING WALLS TO BE OF 2-HOUR FIRE-RESISTIVE CONSTRUCTION.

3. ALL SHAFT WALLS TO BE OF 2-HOUR FIRE-RESISTIVE CONSTRUCTION.

4. SEE UNIT PLANS FOR UNIT DIMENSIONS AND SPECIFIC KEY NOTING

5. SEE UNIT PLANS FOR UNIT DOOR & WINDOW TYPES.

6. 6"X6" CONC. CURB AT EXTERIOR PERIMETER WALLS ON GROUND FLOOR STRUCTURAL SLAB.

7. SEE WALL SECTIONS FOR BALCONY CONSTRUCTION.

TRUE NORTH
PLAN NORTH

THIRD FLOOR PLAN — Scale 1/16" = 1'-0" (5)

KEY NOTES — Scale X" = 1'-0" (1)

WWC OT
Widom Wein Cohen O'Leary Terasawa

3130 Wilshire Boulevard
Sixth Floor
Santa Monica, California 90403
T (310) 828-0040
F (310) 453-9432
www.wwcot.com

Inland Empire
Palm Springs
Moorpark
Shanghai, China

RECEIVED
10:08 am, Aug 14, 2008
FRAMEMAX

Building Department Submittal: June 1, 2007
Issued For Bid:
Issued For Construction:

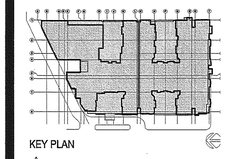

KEY PLAN

Project:
Jewish Home for The Aging
FOUNTAINVIEW AT EISENBERG VILLAGE
6440 Wilbur Ave
Reseda, CA. 91335

JEWISH HOME
JEWISH HOME FOR THE AGING
18855 Victory Blvd.
Reseda, CA 91335
Project Number: 04206.00

THIRD FLOOR PLAN

Date: 04/05/2007
Drawn By:
Checked By:

A2.3.1
Sheet No.

File Path & Name: F:\PROJECTS\04206-00\A-CD\SHEETS\A2.3.1.DWG
© WWCOT 2006 May 28, 2007 - 03:40 pm

RECEIVED BY SUFFOLK ON 06/01/07

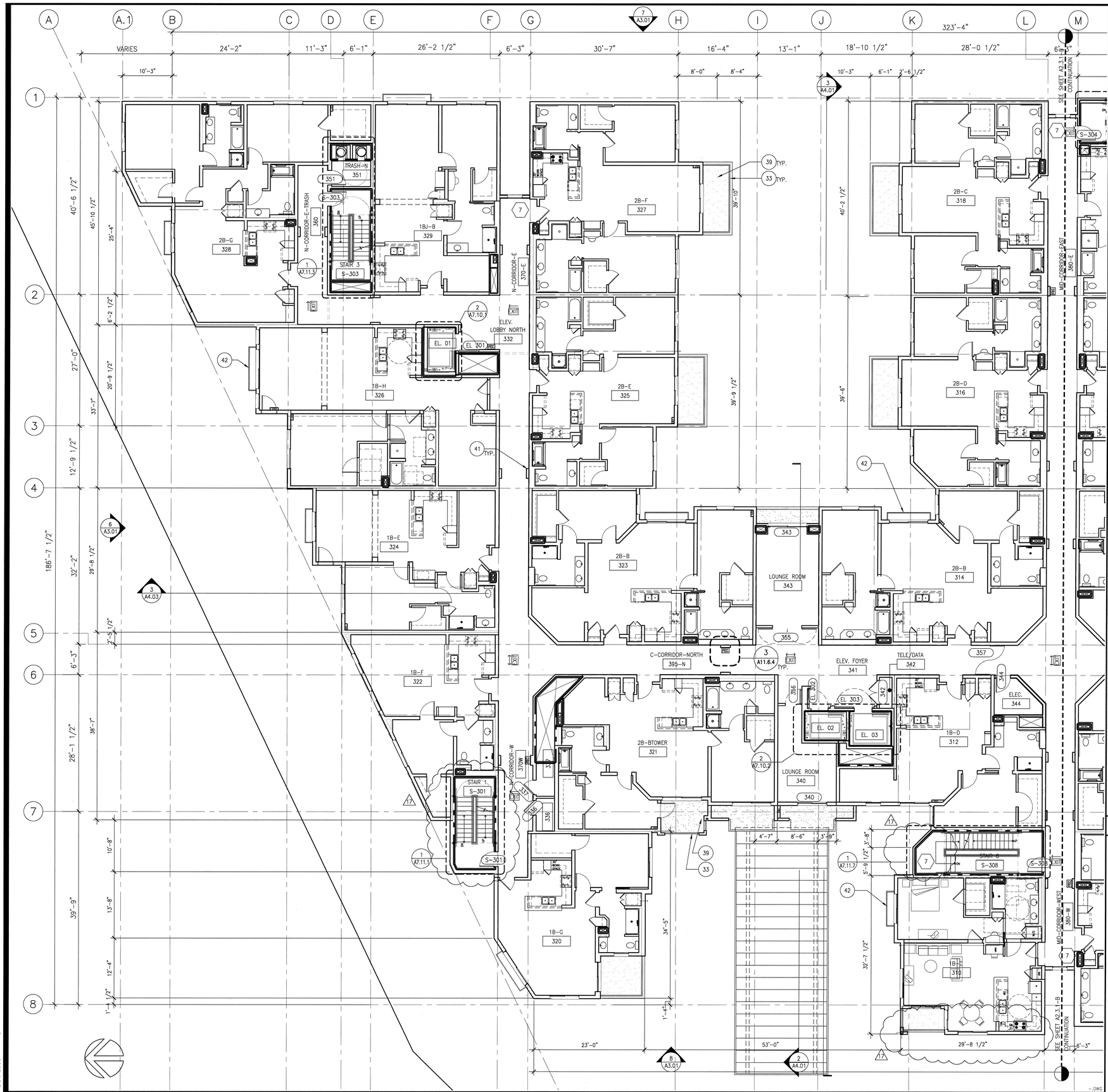

THIRD FLOOR PLAN (NORTH)

Scale 1/8" = 1'-0" (2)

KEY NOTES

1. ~~PLANTER, SEE LANDSCAPE FOR INFORMATION AND DETAILS~~
2. ~~STONE PAVING, SEE LANDSCAPE FOR ADDITIONAL INFORMATION AND DETAILS~~
3. ~~STEEL COLUMN, SEE STRUCTURAL PLANS FOR ADDITIONAL INFORMATION, TYP.~~
4. ~~STEEL HANDRAIL, SEE ENLARGED STAIR DETAILS FOR ADDITIONAL INFORMATION~~
5. ~~STEEL GUARDRAIL, SEE ENLARGED STAIR DETAILS FOR ADDITIONAL INFORMATION~~
6. ~~PASSENGER ELEVATOR, SEE SPECIFICATIONS FOR TYPE AND MODEL~~
7. ~~SERVICE ELEVATOR, SEE SPECIFICATIONS FOR TYPE AND MODEL~~
8. ~~COUNTERTOP, SEE INTERIOR ELEVATIONS FOR FINISH AND DETAILS~~
9. ~~STAINLES STEEL SINK, SEE INTERIOR ELEVATIONS AND PLUMBING PLANS FOR FIXTURE SPECIFICATIONS TYPE AND MODEL~~
10. ~~BUILT IN BAR, SEE INTERIOR ELEVATION AND FINISH PLANS FOR TYPE AND DETAILS~~
11. ~~ELECTRIC FIREPLACE, SEE SPECIFICATIONS~~
12. ~~STONE HEARTH, SEE FINISH PLANS~~
13. ~~BUILT-IN CABINETRY, SEE INTERIOR ELEVATIONS~~
14. ~~BUILT-IN MAIL BOXES, SEE INTERIOR ELEVATIONS~~
15. ~~COUNTERTOP AND SINK, SEE PLUMBING AND INTERIOR ELEVATION PLANS~~
16. ~~WOOD RAILING, SEE INTERIOR ELEVATIONS~~
17. ~~ALUMINUM STORE FRONT SYSTEM, SEE WINDOW SCHEDULE~~
18. ~~KITCHEN EQUIPMENT, SEE FOOD SERVICE PLANS AND SPECIFICATIONS~~
19. ~~REFRIGERATOR, SEE PROJECT MANUAL FOR RESIDENTIAL APPLIANCE SPECIFICATIONS~~
20. ~~BUILDING LINE ABOVE, TYP.~~
21. ~~PRE FABRICATED CONCRETE FILLED PAN TREAD AND LANDINGS METAL STAIRS, SEE ENLARGED STAIR PLANS, TYP.~~
22. ~~REINFORCED CONCRETE STAIRS, SEE STRUCTURAL DRAWINGS AND DETAIL 9,11,12/~~A7.11.2
23. ~~WALL MOUNTED HANDRAIL~~
24. ~~CONCRETE RETAINING WALL, SEE SLAB AND STRUCTURAL FOUNDATION PLANS FOR ADDITIONAL INFORMATION~~
25. ~~CMU RETAINING WALL, SEE SLAB AND STRUCTURAL FOUNDATION PLANS FOR ADDITIONAL INFORMATION~~
26. ~~W.I. FENCE OVER CMU WALL~~
27. ~~GREEN SCREEN ANCHORED IN CMU WALL, SEE LANDSCAPE~~ DRAWINGS
28. ~~CONCRETE CURB AND WALK, SEE SLAB PLAN, TYP.~~
29. ~~REINFORCED CONCRETE COLUMN, SEE STRUCTURAL DRAWINGS FOR SIZE AND DETAILS, TYP.~~
30. ~~6" CONCRETE SLAB, SEE STRUCTURAL DRAWINGS FOR SPECIFICATIONS AND DETAILS, TYP.~~
31. ~~24" FIXED THEATER SEATING, SEE SPECIFICATIONS, TYP.~~
32. ~~CHAIN LINK STORAGE CAGE WITH LOCK AND KEY~~
33. BALCONY RAILING, SEE SHEET A6.5.3
34. ~~AREA EMERGENCY DRAIN, SEE PLUMBING~~
35. ~~TRENCH DRAIN, SEE PLUMBING~~ AND CIVIL
36. ~~CONCRETE RAMP WITH MEDIUM BROOM FINISH~~
37. ~~ROLL DOWN SECURITY GRILLE~~
38. ~~STANDING SEAM METAL ENTRY CANOPY ROOFING~~
39. DEX-O-TEX DECKING FINISH, SLOPE TO DRAIN, TYP.
40. ~~GARAGE VENTILATION SHAFT~~
41. DRYWALL PLANT ON
42. JULIETTE BALCONY SEE SHEET A6.5.3
43. PAINTED 12"X15"X72" METAL LOCKER (2-TIER)
44. EXPANSION JOINT

Scale (2)

WWC OT
Widom Wein Cohen O'Leary Terasawa

3130 Wilshire Boulevard
Sixth Floor
Santa Monica, California 90403
T (310) 828-0040
F (310) 453-9432
www.wwcot.com

Inland Empire
Palm Springs
Moorpark
Shanghai, China

RECEIVED
10:08 am, Aug 14, 2008
FRAMEMAX

Building Department Submittal: June 1, 2007
Issued For Bid: _____
Issued For Construction: January 29, 2008

17 06-13-2008 UNIT LOCATION & STAIR WIDTH REVISIONS

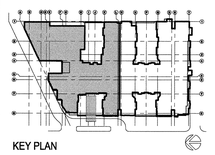

KEY PLAN

RECEIVED
JUN 23 2008
SUFFOLK CONSTRUCTION

Project:
Jewish Home for The Aging
FOUNTAINVIEW AT EISENBERG VILLAGE
6440 Wilbur Ave
Reseda, CA. 91335

JEWISH HOME
JEWISH HOME FOR THE AGING
18855 Victory Blvd.
Reseda, CA 91335

Project Number: 04206.00

THIRD FLOOR PLAN (NORTH)

Date: 01/21/2008
Drawn By: _____
Checked By: _____

A2.3.1-A
Sheet No.

File Path & Name: F:\PROJECTS\04206-00\A-CD\SHEETS\A2.3.1-A.DWG
© WWCOT 2006 Jan 20, 2008 - 11:54 am

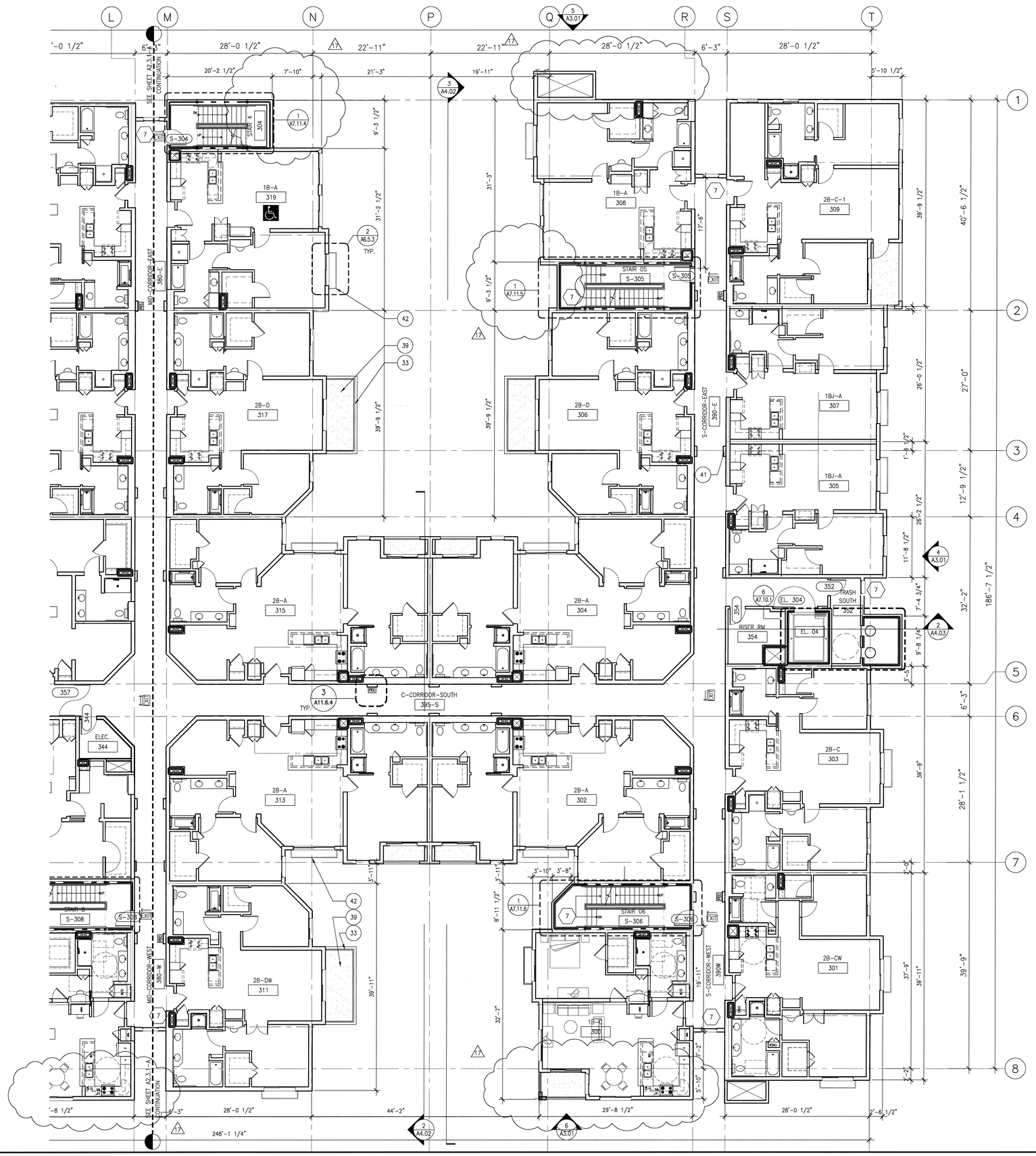

THIRD FLOOR PLAN (SOUTH)

Scale 1/8" = 1'-0" 2

File Path & Name: F:\PROJECTS\04206-00\A-CD\SHEETS\A2.3.1-B.DWG
© WWCOT 2006 Jun 20, 2008 - 11:55 am

KEY NOTES

1. PLANTER, SEE LANDSCAPE FOR INFORMATION AND DETAILS
2. STONE PAVING, SEE LANDSCAPE FOR ADDITIONAL INFORMATION AND DETAILS
3. STEEL COLUMN, SEE STRUCTURAL PLANS FOR ADDITIONAL INFORMATION, TYP.
4. STEEL HANDRAIL, SEE ENLARGED STAIR DETAILS FOR ADDITIONAL INFORMATION
5. STEEL GUARDRAIL, SEE ENLARGED STAIR DETAILS FOR ADDITIONAL INFORMATION
6. PASSENGER ELEVATOR, SEE SPECIFICATIONS FOR TYPE AND MODEL
7. SERVICE ELEVATOR, SEE SPECIFICATIONS FOR TYPE AND MODEL
8. COUNTERTOP, SEE INTERIOR ELEVATIONS FOR FINISH AND DETAILS
9. STAINLES STEEL SINK, SEE INTERIOR ELEVATIONS AND PLUMBING PLANS FOR FIXTURE SPECIFICATIONS TYPE AND MODEL
10. BUILT IN BAR, SEE INTERIOR ELEVATION AND FINISH PLANS FOR TYPE AND DETAILS
11. ELECTRIC FIREPLACE, SEE SPECIFICATIONS
12. STONE HEARTH, SEE FINISH PLANS
13. BUILT-IN CABINETRY, SEE INTERIOR ELEVATIONS
14. BUILT-IN MAIL BOXES, SEE INTERIOR ELEVATIONS
15. COUNTERTOP AND SINK, SEE PLUMBING AND INTERIOR ELEVATION PLANS
16. WOOD RAILING, SEE INTERIOR ELEVATIONS
17. ALUMINUM STORE FRONT SYSTEM, SEE WINDOW SCHEDULE
18. KITCHEN EQUIPMENT, SEE FOOD SERVICE PLANS AND SPECIFICATIONS
19. REFRIGERATOR, SEE PROJECT MANUAL FOR RESIDENTIAL APPLIANCE SPECIFICATIONS
20. BUILDING LINE ABOVE, TYP.
21. PRE-FABRICATED CONCRETE FILLED PAN TREAD AND LANDINGS METAL STAIRS, SEE ENLARGED STAIR PLANS, TYP.
22. REINFORCED CONCRETE STAIRS, SEE STRUCTURAL DRAWINGS AND DETAIL 9,11,12/A7.11.2
23. WALL MOUNTED HANDRAIL
24. CONCRETE RETAINING WALL, SEE SLAB AND STRUCTURAL FOUNDATION PLANS FOR ADDITIONAL INFORMATION
25. CMU RETAINING WALL, SEE SLAB AND STRUCTURAL FOUNDATION PLANS FOR ADDITIONAL INFORMATION
26. W.I. FENCE OVER CMU WALL
27. GREEN SCREEN ANCHORED IN CMU WALL, SEE LANDSCAPE DRAWINGS
28. CONCRETE CURB AND WALK, SEE SLAB PLAN, TYP.
29. REINFORCED CONCRETE COLUMN, SEE STRUCTURAL DRAWINGS FOR SIZE AND DETAILS, TYP.
30. 6" CONCRETE SLAB, SEE STRUCTURAL DRAWINGS FOR SPECIFICATIONS AND DETAILS, TYP.
31. 24" FIXED THEATER SEATING, SEE SPECIFICATIONS, TYP.
32. CHAIN LINK STORAGE CAGE WITH LOCK AND KEY
33. BALCONY RAILING, SEE SHEET A6.5.3
34. AREA EMERGENCY DRAIN, SEE PLUMBING
35. TRENCH DRAIN, SEE PLUMBING AND CIVIL
36. CONCRETE RAMP WITH MEDIUM BROOM FINISH
37. ROLL DOWN SECURITY GRILLE
38. STANDING SEAM METAL ENTRY CANOPY ROOFING
39. DEX-O-TEX DECKING FINISH, SLOPE TO DRAIN, TYP.
40. GARAGE VENTILATION SHAFT
41. DRYWALL PLANT ON
42. JULIETTE BALCONY SEE SHEET A6.5.3
43. PAINTED 12"X15"X72" METAL LOCKER (2-TIER)
44. EXPANSION JOINT

WWC OT
Widom Wein Cohen O'Leary Terasawa

3130 Wilshire Boulevard
Sixth Floor
Santa Monica, California 90403
T (310) 828-0040
F (310) 453-9432
www.wwcot.com

Inland Empire
Palm Springs
Moorpark
Shanghai, China

RECEIVED
10:08 am, Aug 14, 2008
FRAMEMAX

Building Department Submittal: June 1, 2007
Issued For Bid: _____
Issued For Construction: January 29, 2008

17 06-13-2008 UNIT LOCATION & STAIR WIDTH REVISIONS

KEY PLAN

RECEIVED
JUN 23 2008
SUFFOLK CONSTRUCTION

Project:
Jewish Home for The Aging
FOUNTAINVIEW AT EISENBERG VILLAGE
6440 Wilbur Ave
Reseda, CA. 91335

JEWISH HOME FOR THE AGING
18855 Victory Blvd.
Reseda, CA 91335
Project Number: 04206.00

THIRD FLOOR PLAN (SOUTH)

Date: 01/21/2008
Drawn By: _____
Checked By: _____

A2.3.1-B
Sheet No.

NOTES:

1. DIMENSIONS IN PARATHESIS ARE CORRECT. NO CHANGE.
2. CLOUDED DIMENSIONS HAVE BEEN REVISED TO MATCH ARCHITECTURAL FLOOR PLANS.

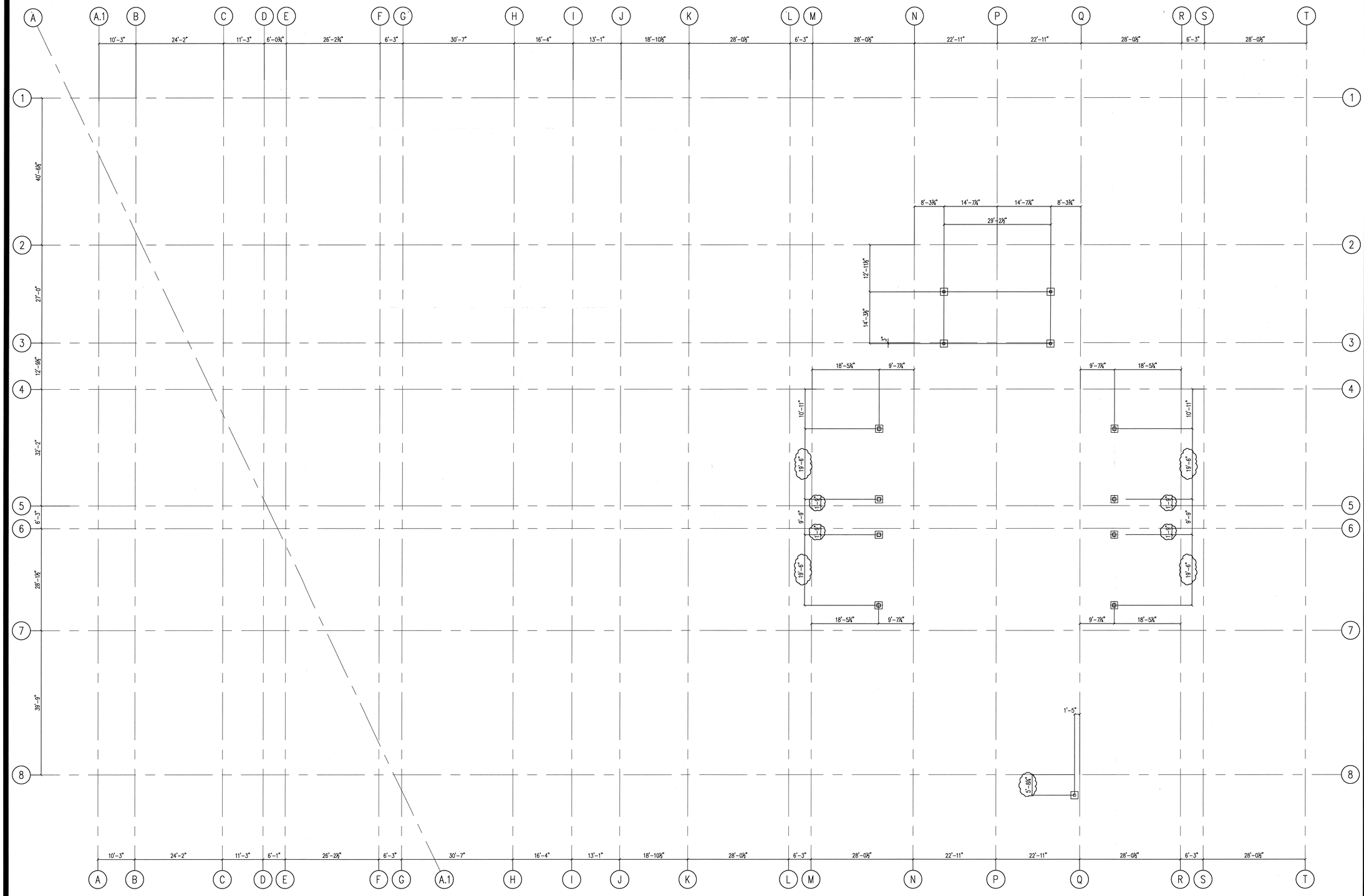

THIRD & FOURTH FLOOR FRAMING PLAN

Scale 3/32" = 1'-0" (1)

File Path & Name: F:\PROJECTS\04206-00\A-CD\SHEETS\A2.3.1-C.DWG
© WWCOT 2006 Jun 24, 2008 - 09:51 am

WWC OT
Widom Wein Cohen O'Leary Terasawa

3130 Wilshire Boulevard
Sixth Floor
Santa Monica, California 90403
T (310) 828-0040
F (310) 453-9432
www.wwcot.com

Inland Empire
Palm Springs
Moorpark
Shanghai, China

RECEIVED
10:08 am, Aug 14, 2008
FRAMEMAX

Building Department Submittal: June 1, 2007
Issued For Bid: ———
Issued For Construction: January 29, 2008

△21 06-24-2008 BULLETIN #21 DIMENSIONED FRAMING PLAN

KEY PLAN

RECEIVED
JUN 25 2008
SUFFOLK CONSTRUCTION

Project:
Jewish Home for The Aging
FOUNTAINVIEW AT EISENBERG VILLAGE
6440 Wilbur Ave
Reseda, CA. 91335

JEWISH HOME FOR THE AGING
18855 Victory Blvd.
Reseda, CA 91335
Project Number: 04206.00

3RD & 4TH FLOOR FRAMING PLAN

Date: 01/21/2008
Drawn By: ———
Checked By: ———

A2.3.1-C
Sheet No.

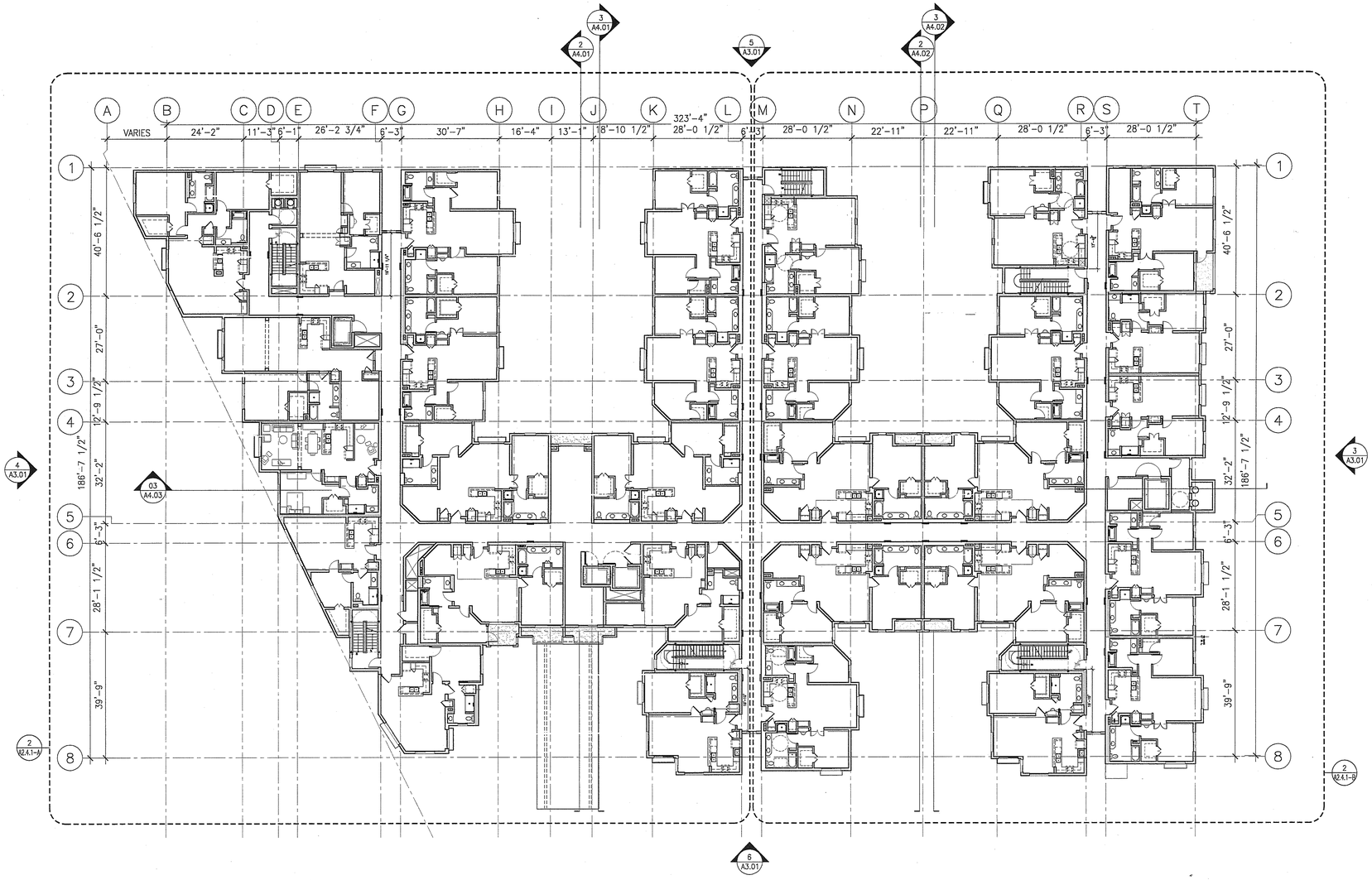

1. ALL DIMENSIONS ARE SHOWN TO FACE OF STUD OR FACE OF FRAMING. ALL STUDS ARE 4" DEEP IN NON-BEARING WALLS AND 6" DEEP IN BEARING WALLS.

2. ALL EXTERIOR WALLS, CORRIDOR WALLS. UNIT SEPARATION WALLS, AND INTERIOR BEARING WALLS TO BE OF 2-HOUR FIRE-RESISTIVE CONSTRUCTION.

3. ALL SHAFT WALLS TO BE OF 2-HOUR FIRE-RESISTIVE CONSTRUCTION.

4. SEE UNIT PLANS FOR UNIT DIMENSIONS AND SPECIFIC KEY NOTING

5. SEE UNIT PLANS FOR UNIT DOOR & WINDOW TYPES.

6. 6"X6" CONC. CURB AT EXTERIOR PERIMETER WALLS ON GROUND FLOOR STRUCTURAL SLAB.

7. SEE WALL SECTIONS FOR BALCONY CONSTRUCTION.

TRUE NORTH
PLAN NORTH

FOURTH FLOOR PLAN — Scale 1/16" = 1'-0" (5)

KEY NOTES — Scale X" = 1'-0" (1)

WWCOT
Widom Wein Cohen O'Leary Terasawa

3130 Wilshire Boulevard
Sixth Floor
Santa Monica, California 90403
T (310) 828-0040
F (310) 453-9432
www.wwcot.com

Inland Empire
Palm Springs
Moorpark
Shanghai, China

RECEIVED
10:08 am, Aug 14, 2008
FRAMEMAX

Building Department Submittal: June 1, 2007
Issued For Bid:
Issued For Construction:

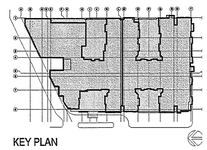

KEY PLAN

Project:
Jewish Home for The Aging

FOUNTAINVIEW AT EISENBERG VILLAGE

6440 Wilbur Ave
Reseda, CA. 91335

JEWISH HOME

JEWISH HOME FOR THE AGING
18855 Victory Blvd.
Reseda, CA 91335

Project Number: 04206.00

FOURTH FLOOR PLAN

Date: 04/05/2007
Drawn By:
Checked By:

A2.4.1
Sheet No.

File Path & Name: F:\PROJECTS\04206.00\A-CD\SHEETS\A2.4.1.DWG
© WWCOT 2006 May 20, 2007 - 03:41 pm

FP_legend-OA.dwg

RECEIVED BY SUFFOLK ON 06/01/07

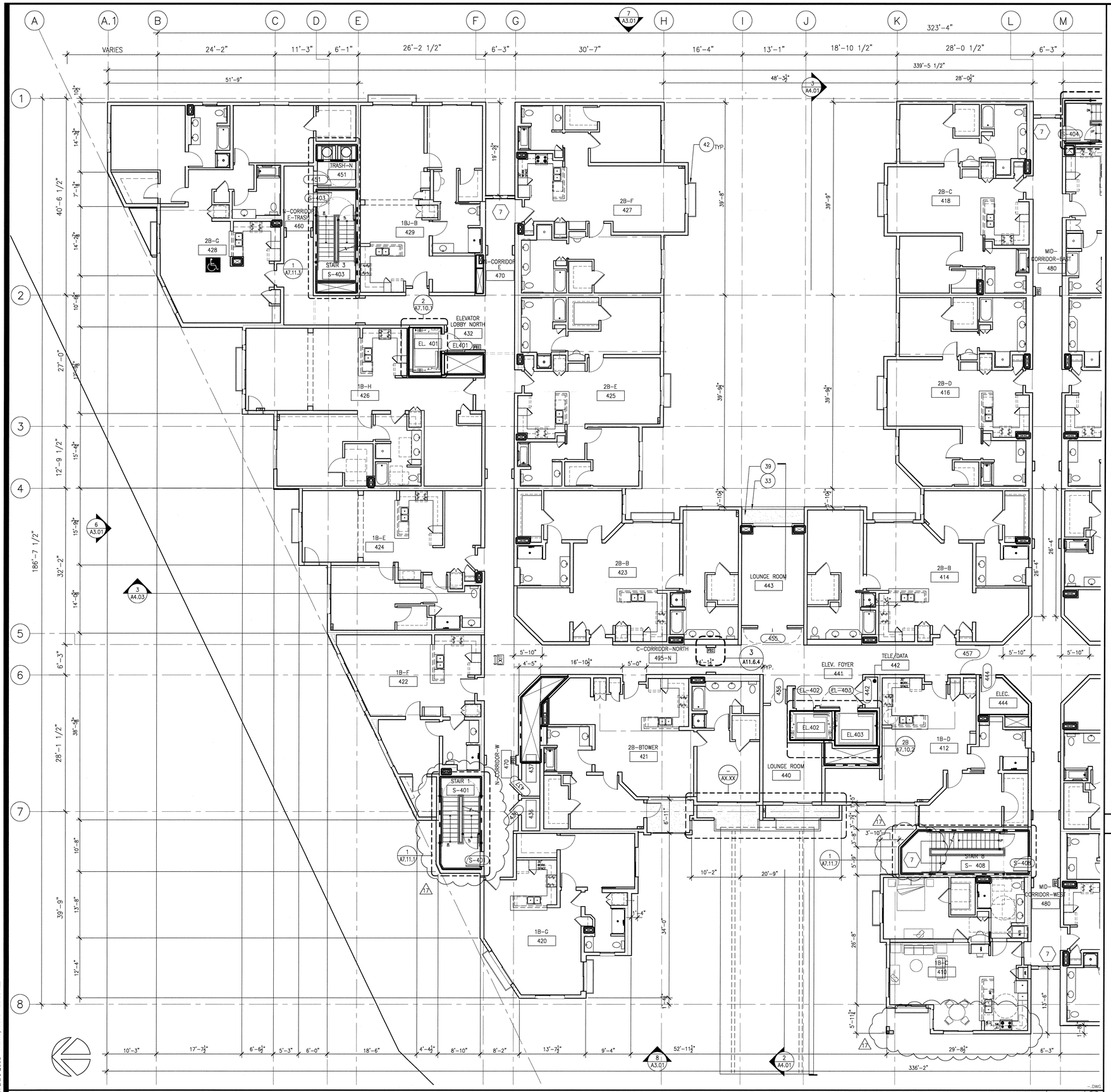

FOURTH FLOOR PLAN (NORTH)

Scale 1/8" = 1'-0" (2)

1. PLANTER, SEE LANDSCAPE FOR INFORMATION AND DETAILS
2. STONE PAVING, SEE LANDSCAPE FOR ADDITIONAL INFORMATION AND DETAILS
3. STEEL COLUMN, SEE STRUCTURAL PLANS FOR ADDITIONAL INFORMATION, TYP.
4. STEEL HANDRAIL, SEE ENLARGED STAIR DETAILS FOR ADDITIONAL INFORMATION
5. STEEL GUARDRAIL, SEE ENLARGED STAIR DETAILS FOR ADDITIONAL INFORMATION
6. PASSENGER ELEVATOR, SEE SPECIFICATIONS FOR TYPE AND MODEL
7. SERVICE ELEVATOR, SEE SPECIFICATIONS FOR TYPE AND MODEL
8. COUNTERTOP, SEE INTERIOR ELEVATIONS FOR FINISH AND DETAILS
9. STAINLES STEEL SINK, SEE INTERIOR ELEVATIONS AND PLUMBING PLANS FOR FIXTURE SPECIFICATIONS TYPE AND MODEL
10. BUILT IN BAR, SEE INTERIOR ELEVATION AND FINISH PLANS FOR TYPE AND DETAILS
11. ELECTRIC FIREPLACE, SEE SPECIFICATIONS
12. STONE HEARTH, SEE FINISH PLANS
13. BUILT IN CABINETRY, SEE INTERIOR ELEVATIONS
14. BUILT IN MAIL BOXES, SEE INTERIOR ELEVATIONS
15. COUNTERTOP AND SINK, SEE PLUMBING AND INTERIOR ELEVATION PLANS
16. WOOD RAILING, SEE INTERIOR ELEVATIONS
17. ALUMINUM STORE FRONT SYSTEM, SEE WINDOW SCHEDULE
18. KITCHEN EQUIPMENT, SEE FOOD SERVICE PLANS AND SPECIFICATIONS
19. REFRIGERATOR, SEE PROJECT MANUAL FOR RESIDENTIAL APPLIANCE SPECIFICATIONS
20. BUILDING LINE ABOVE, TYP.
21. PRE-FABRICATED CONCRETE FILLED PAN TREAD AND LANDINGS METAL STAIRS, SEE ENLARGED STAIR PLANS, TYP.
22. REINFORCED CONCRETE STAIRS, SEE STRUCTURAL DRAWINGS AND DETAIL 9,11,12/A7.11.2
23. WALL MOUNTED HANDRAIL
24. CONCRETE RETAINING WALL, SEE SLAB AND STRUCTURAL FOUNDATION PLANS FOR ADDITIONAL INFORMATION
25. CMU RETAINING WALL, SEE SLAB AND STRUCTURAL FOUNDATION PLANS FOR ADDITIONAL INFORMATION
26. W.I. FENCE OVER CMU WALL
27. GREEN SCREEN ANCHORED IN CMU WALL, SEE LANDSCAPE DRAWINGS
28. CONCRETE CURB AND WALK, SEE SLAB PLAN, TYP.
29. REINFORCED CONCRETE COLUMN, SEE STRUCTURAL DRAWINGS FOR SIZE AND DETAILS, TYP.
30. 6" CONCRETE SLAB, SEE STRUCTURAL DRAWINGS FOR SPECIFICATIONS AND DETAILS, TYP.
31. 24" FIXED THEATER SEATING, SEE SPECIFICATIONS, TYP.
32. CHAIN LINK STORAGE CAGE WITH LOCK AND KEY
33. BALCONY RAILING, SEE SHEET A6.5.3
34. AREA EMERGENCY DRAIN, SEE PLUMBING
35. TRENCH DRAIN, SEE PLUMBING AND CIVIL
36. CONCRETE RAMP WITH MEDIUM BROOM FINISH
37. ROLL DOWN SECURITY GRILLE
38. STANDING SEAM METAL ENTRY CANOPY ROOFING
39. DEX-O-TEX DECKING FINISH, SLOPE TO DRAIN, TYP.
40. GARAGE VENTILATION SHAFT
41. DRYWALL PLANT ON
42. JULIETTE BALCONY SEE SHEET A6.5.3
43. PAINTED 12"X15"X72" METAL LOCKER (2-TIER)
44. EXPANSION JOINT

KEY NOTES

Scale (2)

WWCOT
Widom Wein Cohen O'Leary Terasawa

3130 Wilshire Boulevard
Sixth Floor
Santa Monica, California 90403
T (310) 828-0040
F (310) 453-9432
www.wwcot.com

Inland Empire
Palm Springs
Moorpark
Shanghai, China

RECEIVED
10:08 am, Aug 14, 2008
FRAMEMAX

Building Department Submittal: June 1, 2007
Issued For Bid: _____
Issued For Construction: January 29, 2008

17 06-13-2008 UNIT LOCATION & STAIR WIDTH REVISIONS

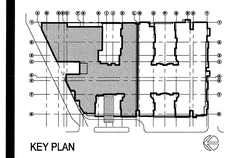

KEY PLAN

RECEIVED
JUN 23 2008
SUFFOLK CONSTRUCTION

Project:
Jewish Home for The Aging
FOUNTAINVIEW AT EISENBERG VILLAGE
6440 Wilbur Ave
Reseda, CA. 91335

BPB JEWISH HOME
JEWISH HOME FOR THE AGING
18855 Victory Blvd.
Reseda, CA 91335

Project Number: 04206.00

FOURTH FLOOR PLAN (NORTH)

Date: 01/21/2008
Drawn By: _____
Checked By: _____

A2.4.1-A
Sheet No.

File Path & Name: F:\PROJECTS\04206-000\A-CD\SHEETS\A2.4.1-A.DWG
© WWCOT 2006 Jun 20, 2008 - 11:55 am

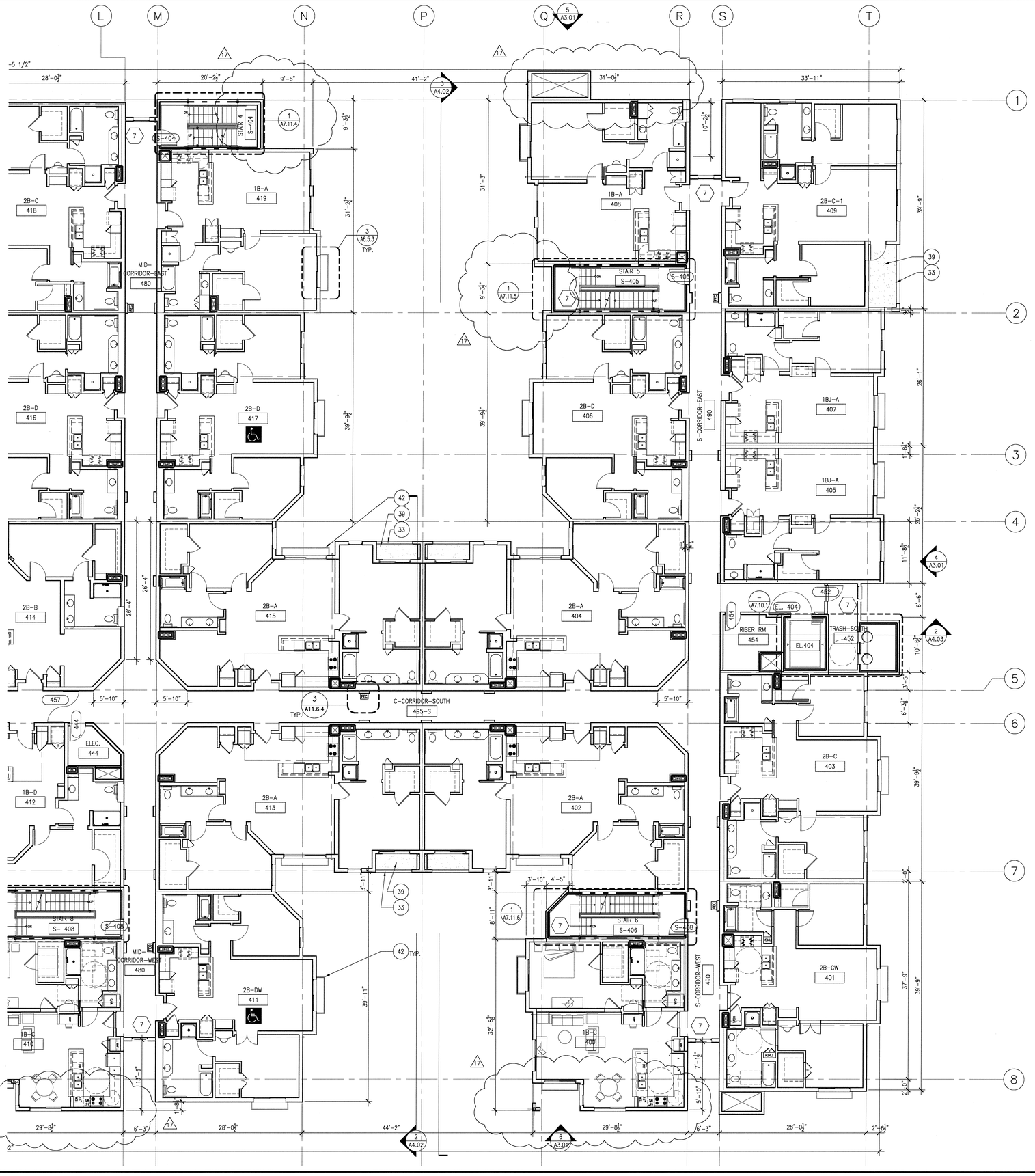

FOURTH FLOOR PLAN (SOUTH)

Scale 1/8" = 1'-0" (2)

1. ~~PLANTER, SEE LANDSCAPE FOR INFORMATION AND DETAILS~~
2. ~~STONE PAVING, SEE LANDSCAPE FOR ADDITIONAL INFORMATION AND DETAILS~~
3. ~~STEEL COLUMN, SEE STRUCTURAL PLANS FOR ADDITIONAL INFORMATION, TYP.~~
4. ~~STEEL HANDRAIL, SEE ENLARGED STAIR DETAILS FOR ADDITIONAL INFORMATION~~
5. ~~STEEL GUARDRAIL, SEE ENLARGED STAIR DETAILS FOR ADDITIONAL INFORMATION~~
6. ~~PASSENGER ELEVATOR, SEE SPECIFICATIONS FOR TYPE AND MODEL~~
7. ~~SERVICE ELEVATOR, SEE SPECIFICATIONS FOR TYPE AND MODEL~~
8. ~~COUNTERTOP, SEE INTERIOR ELEVATIONS FOR FINISH AND DETAILS~~
9. ~~STAINLESS STEEL SINK, SEE INTERIOR ELEVATIONS AND PLUMBING PLANS FOR FIXTURE SPECIFICATIONS TYPE AND MODEL~~
10. ~~BUILT IN BAR, SEE INTERIOR ELEVATION AND FINISH PLANS FOR TYPE AND DETAILS~~
11. ~~ELECTRIC FIREPLACE, SEE SPECIFICATIONS~~
12. ~~STONE HEARTH, SEE FINISH PLANS~~
13. ~~BUILT-IN CABINETRY, SEE INTERIOR ELEVATIONS~~
14. ~~BUILT-IN MAIL BOXES, SEE INTERIOR ELEVATIONS~~
15. ~~COUNTERTOP AND SINK, SEE PLUMBING AND INTERIOR ELEVATION PLANS~~
16. ~~WOOD RAILING, SEE INTERIOR ELEVATIONS~~
17. ~~ALUMINUM STORE FRONT SYSTEM, SEE WINDOW SCHEDULE~~
18. ~~KITCHEN EQUIPMENT, SEE FOOD SERVICE PLANS AND SPECIFICATIONS~~
19. ~~REFRIGERATOR, SEE PROJECT MANUAL FOR RESIDENTIAL APPLIANCE SPECIFICATIONS~~
20. ~~BUILDING LINE ABOVE, TYP.~~
21. ~~PRE-FABRICATED CONCRETE FILLED PAN TREAD AND LANDINGS METAL STAIRS, SEE ENLARGED STAIR PLANS, TYP.~~
22. ~~REINFORCED CONCRETE STAIRS, SEE STRUCTURAL DRAWINGS AND DETAIL 9,11,12/A7.11.2~~
23. ~~WALL MOUNTED HANDRAIL~~
24. ~~CONCRETE RETAINING WALL, SEE SLAB AND STRUCTURAL FOUNDATION PLANS FOR ADDITIONAL INFORMATION~~
25. ~~CMU RETAINING WALL, SEE SLAB AND STRUCTURAL FOUNDATION PLANS FOR ADDITIONAL INFORMATION~~
26. ~~W.I. FENCE OVER CMU WALL~~
27. ~~GREEN SCREEN ANCHORED IN CMU WALL, SEE LANDSCAPE DRAWINGS~~
28. ~~CONCRETE CURB AND WALK, SEE SLAB PLAN, TYP.~~
29. ~~REINFORCED CONCRETE COLUMN, SEE STRUCTURAL DRAWINGS FOR SIZE AND DETAILS, TYP.~~
30. ~~6" CONCRETE SLAB, SEE STRUCTURAL DRAWINGS FOR SPECIFICATIONS AND DETAILS, TYP.~~
31. ~~24" FIXED THEATER SEATING, SEE SPECIFICATIONS, TYP.~~
32. ~~CHAIN LINK STORAGE CAGE WITH LOCK AND KEY~~
33. BALCONY RAILING, SEE SHEET A6.5.3
34. ~~AREA EMERGENCY DRAIN, SEE PLUMBING~~
35. TRENCH DRAIN, SEE PLUMBING AND CIVIL
36. ~~CONCRETE RAMP WITH MEDIUM BROOM FINISH~~
37. ~~ROLL DOWN SECURITY GRILLE~~
38. ~~STANDING SEAM METAL ENTRY CANOPY ROOFING~~
39. DEX-O-TEX DECKING FINISH, SLOPE TO DRAIN, TYP.
40. ~~GARAGE VENTILATION SHAFT~~
41. ~~DRYWALL PLANT ON~~
42. JULIETTE BALCONY SEE SHEET A6.5.3
43. PAINTED 12"X15"X72" METAL LOCKER (2-TIER)
44. EXPANSION JOINT

KEY NOTES

Scale (2)

WWC OT
Widom Wein Cohen O'Leary Terasawa

3130 Wilshire Boulevard
Sixth Floor
Santa Monica, California 90403
T (310) 828-0040
F (310) 453-9432
www.wwcot.com

Inland Empire
Palm Springs
Moorpark
Shanghai, China

RECEIVED
10:08 am, Aug 14, 2008
FRAMEMAX

Building Department Submittal: June 1, 2007
Issued For Bid: _____
Issued For Construction: January 29, 2008

1B 06-13-2008 UNIT LOCATION & STAIR REVISIONS WITH REVISIONS

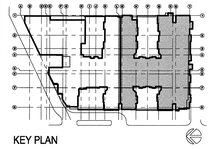

KEY PLAN

RECEIVED
JUN 23 2008
SUFFOLK CONSTRUCTION

Project:
Jewish Home for The Aging

FOUNTAINVIEW AT EISENBERG VILLAGE

6440 Wilbur Ave
Reseda, CA. 91335

BJB JEWISH HOME

JEWISH HOME FOR THE AGING
18855 Victory Blvd.
Reseda, CA 91335

Project Number: 04206.00

FOURTH FLOOR PLAN (SOUTH)

Date: 01/21/2008
Drawn By: _____
Checked By: _____

A2.4.1-B
Sheet No.

File Path & Name: F:\PROJECTS\04206-00\A-CD\SHEETS\A2.4.1-B.DWG
© WWCOT 2006 Jun 20, 2008 - 11:55 am

NOTES:

1. DIMENSIONS IN PARATHESIS ARE CORRECT. NO CHANGE.
2. CLOUDED DIMENSIONS HAVE BEEN REVISED TO MATCH ARCHITECTURAL FLOOR PLANS.

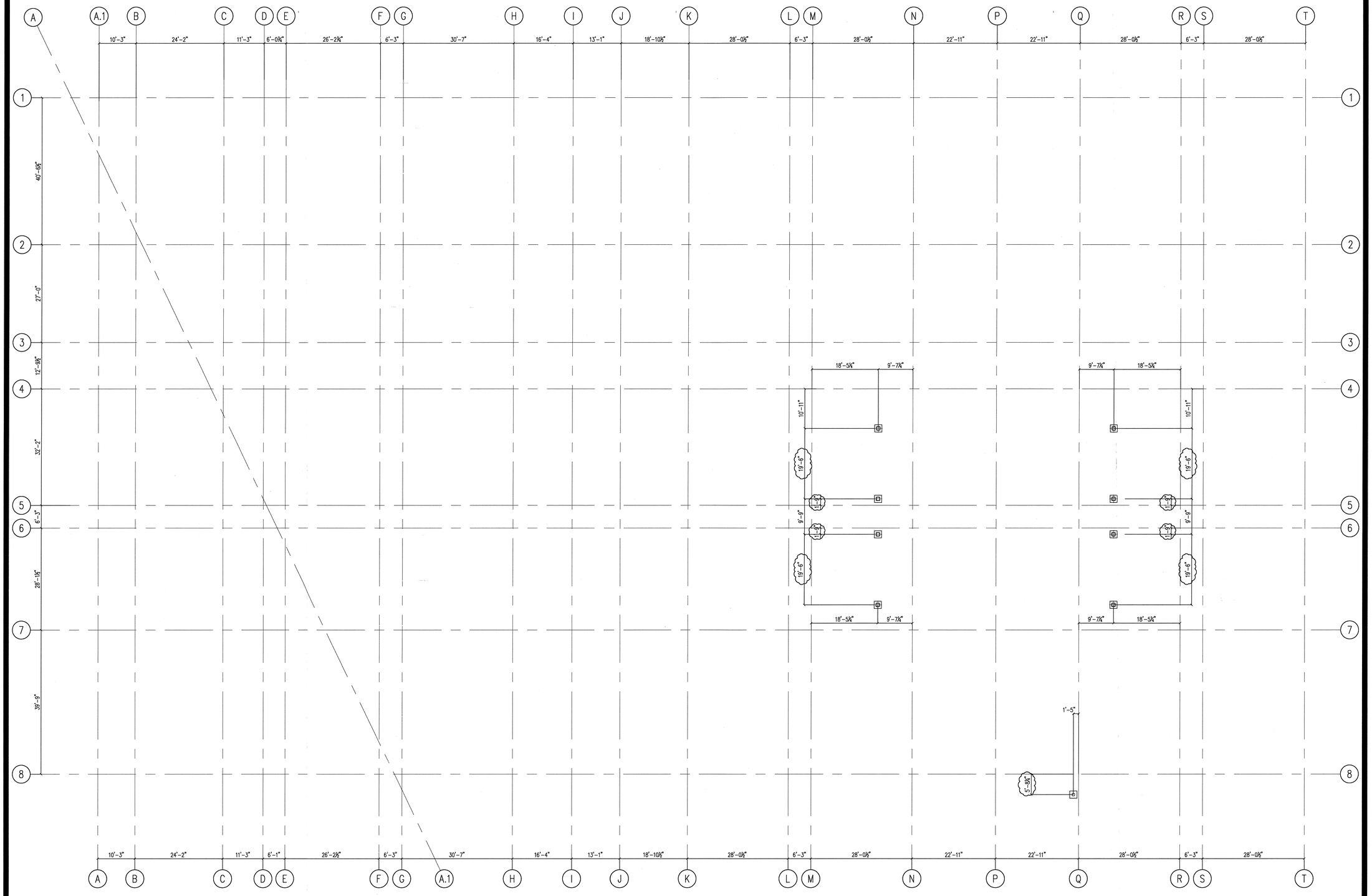

ROOF FRAMING PLAN

Scale 3/32" = 1'-0"

1

File Path & Name: F:\PROJECTS\04206-00\A-CD\SHEETS\A2.4.1-C.DWG
© WWCOT 2006 Jun 24, 2008 - 09:51 am

WWC OT
Widom Wein Cohen O'Leary Terasawa

3130 Wilshire Boulevard
Sixth Floor
Santa Monica, California 90403
T (310) 828-0040
F (310) 453-9432
www.wwcot.com

Inland Empire
Palm Springs
Moorpark
Shanghai, China

RECEIVED
10:08 am, Aug 14, 2008
FRAMEMAX

Building Department Submittal: June 1, 2007
Issued For Bid:
Issued For Construction: January 29, 2008

21 06-24-2008 BULLETIN #21 DIMENSIONED FRAMING PLAN

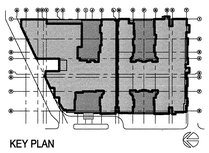

KEY PLAN

RECEIVED
JUN 25 2008
SUFFOLK CONSTRUCTION

Project:
Jewish Home for The Aging
FOUNTAINVIEW AT EISENBERG VILLAGE
6440 Wilbur Ave
Reseda, CA. 91335

JEWISH HOME
JEWISH HOME FOR THE AGING
18855 Victory Blvd.
Reseda, CA 91335
Project Number: 04206.00

ROOF FRAMING PLAN

Date: 01/21/2008
Drawn By: _____
Checked By: _____

A2.4.1-C
Sheet No.

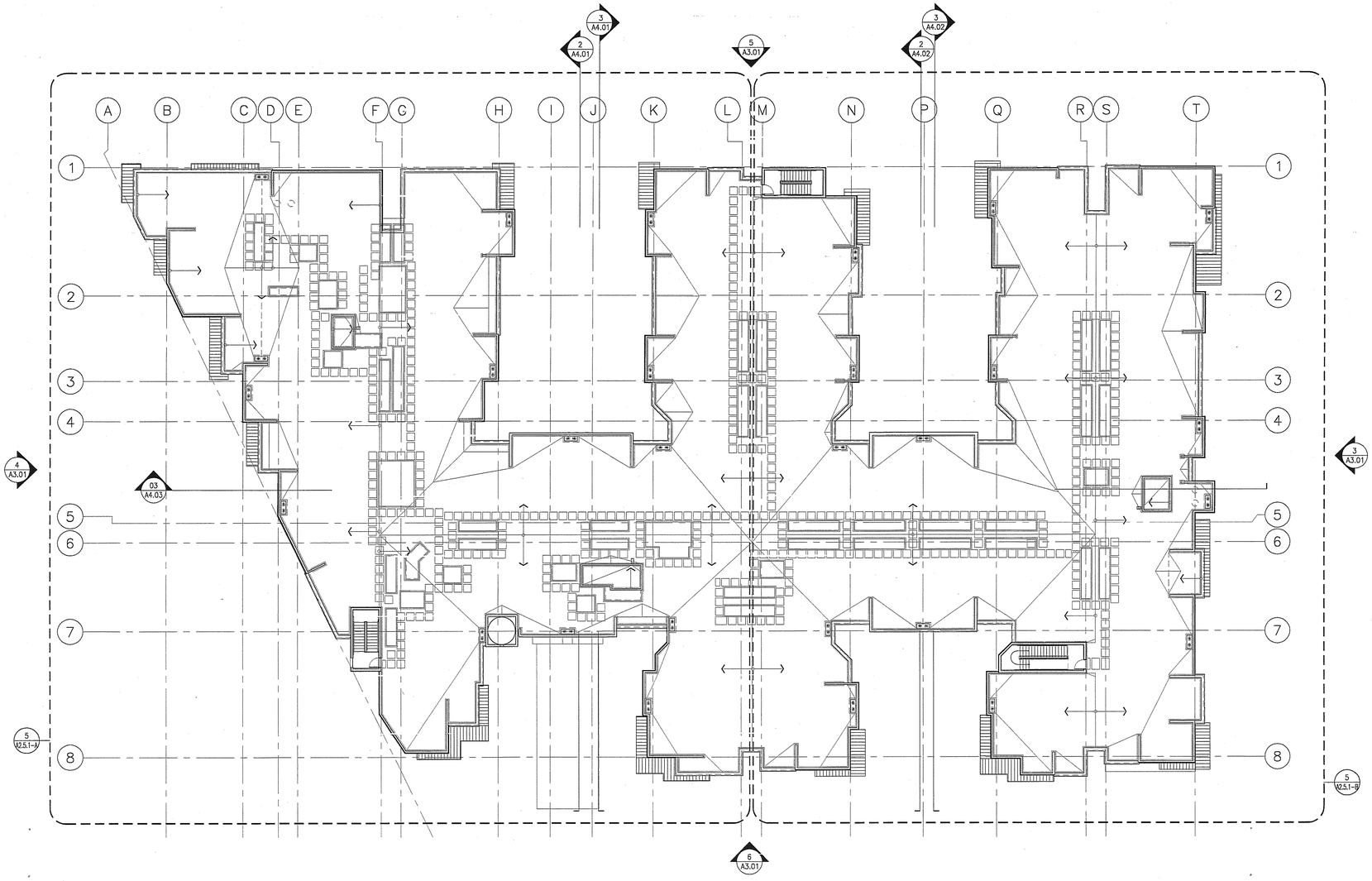

1. ALL DIMENSIONS ARE SHOWN TO FACE OF STUD OR FACE OF FRAMING. ALL STUDS ARE 4" DEEP IN NON-BEARING WALLS AND 6" DEEP IN BEARING WALLS.

TRUE NORTH
PLAN NORTH

ROOF PLAN

Scale 1/16" = 1'-0" (5)

KEY NOTES

Scale (1)

WWC OT
Widom Wein Cohen O'Leary Terasawa

3130 Wilshire Boulevard
Sixth Floor
Santa Monica, California 90403
T (310) 828-0040
F (310) 453-9432
www.wwcot.com

Inland Empire
Palm Springs
Moorpark
Shanghai, China

RECEIVED
10:08 am, Aug 14, 2008
FRAMEMAX

Building Department Submittal: June 1, 2007
Issued For Bid:
Issued For Construction:

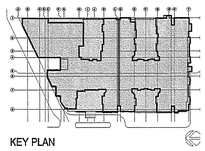

KEY PLAN

Project:
Jewish Home for The Aging
FOUNTAINVIEW AT EISENBERG VILLAGE
6440 Wilbur Ave
Reseda, CA. 91335

JEWISH HOME FOR THE AGING
18855 Victory Blvd.
Reseda, CA 91335
Project Number: 04206.00

ROOF PLAN

Date: 04/05/2007
Drawn By:
Checked By:

A2.5.1
Sheet No.

File Path & Name: F:\PROJECTS\04206-00\A-CD\SHEETS\A2.5.1.DWG
© WWCOT 2006 May 28, 2007 - 03:41 pm

RECEIVED BY SUFFOLK ON 06/01/07

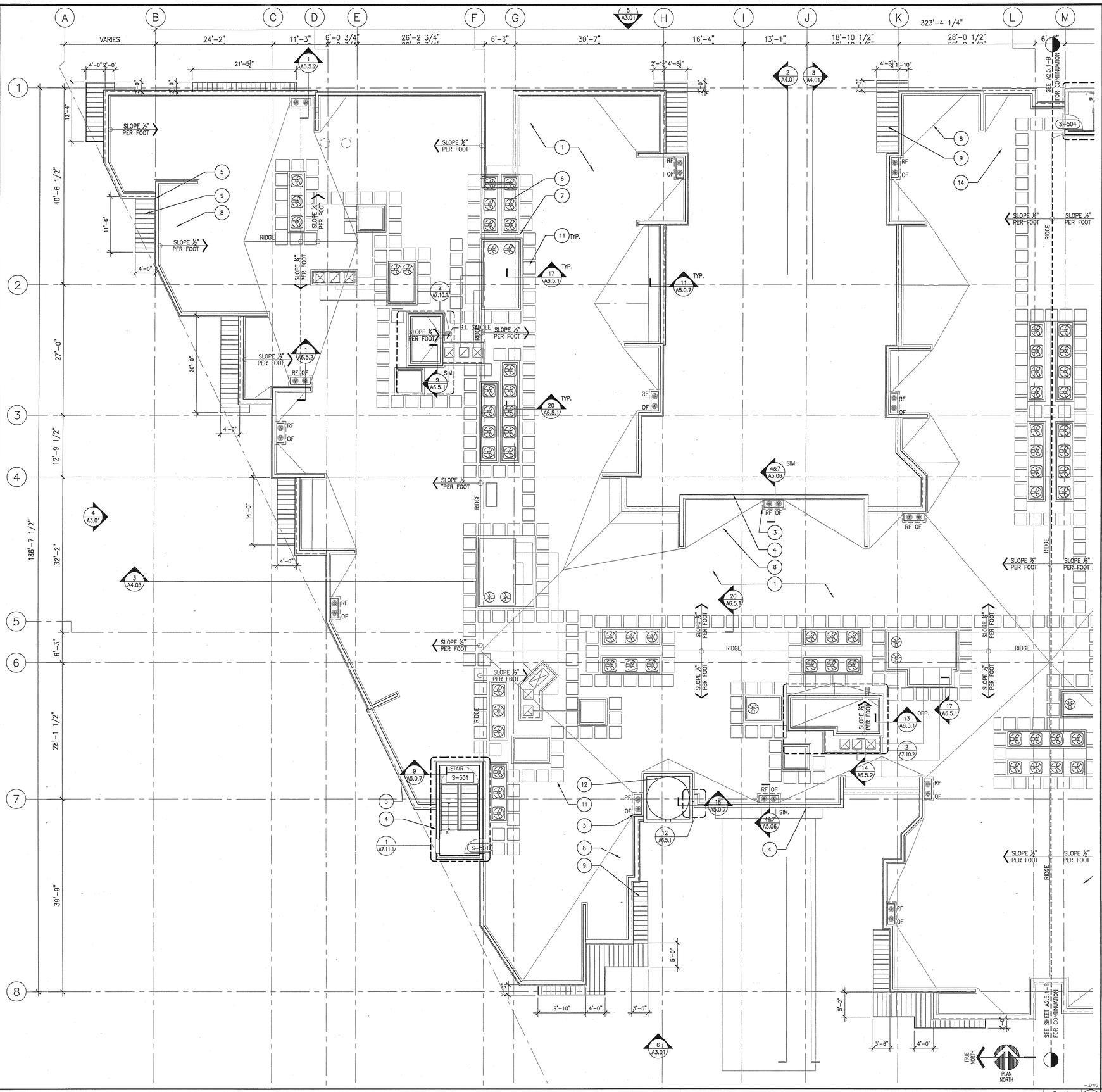

1. CLASS "A", 4-PLY BUILT UP ROOFING, REFER TO SPECIFICATION FOR COMPLETE REQUIREMENTS
2. 4" CONTINUOUS CANT STRIP
3. DRAIN AND OVERFLOW, SEE PLUMBING DRAWINGS AND DETAIL 1/A6.5.2
4. JERUSALEM STONE PARAPET CAP, SEE 11/A5.06
5. CEMENT PLASTER PARAPET CAP OVER ICE AND WATER MEMBRANE, SEE 16/A5.06
6. MECHANICAL EQUIPMENT, SEE MECHANICAL DRAWINGS
7. MECHANICAL EQUIPMENT CURB, SEE 17/A6.5.1
8. BUILT UP CRICKET
9. CANOPY BELOW, SEE BUILDING ELEVATIONS AND DETAIL 13/A6.5.2
10. MECHANICAL EXHAUST, SEE __/__
11. WALKING PADS, SEE 20/A6.5.1
12. STUCCO DOME SEE __/__

ROOF PLAN (NORTH) — Scale 1/8" = 1'-0" (5)

KEY NOTES — Scale (1)

WWC OT
Widom Wein Cohen O'Leary Terasawa

3130 Wilshire Boulevard
Sixth Floor
Santa Monica, California 90403
T (310) 828-0040
F (310) 453-9432
www.wwcot.com

Inland Empire
Palm Springs
Moorpark
Shanghai, China

RECEIVED
10:08 am, Aug 14, 2008
FRAMEMAX

Building Department Submittal: June 1, 2007
Issued For Bid: _____
Issued For Construction: _____

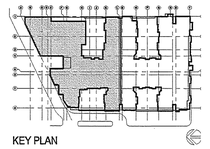

KEY PLAN

Project:
Jewish Home for The Aging
FOUNTAINVIEW AT EISENBERG VILLAGE
6440 Wilbur Ave
Reseda, CA. 91335

JEWISH HOME FOR THE AGING
18855 Victory Blvd.
Reseda, CA 91335
Project Number: 04206.00

ROOF PLAN (NORTH)

Date: 04/05/2007
Drawn By: _____
Checked By: _____

A2.5.1-A
Sheet No.

File Path & Name: F:\PROJECTS\04206-00\A-CD\SHEETS\A2.5.1-A.DWG
© WWCOT 2006 Aug 25, 2007 - 05:41 pm

RP_legend.dwg

RECEIVED BY SUFFOLK ON 06/01/07

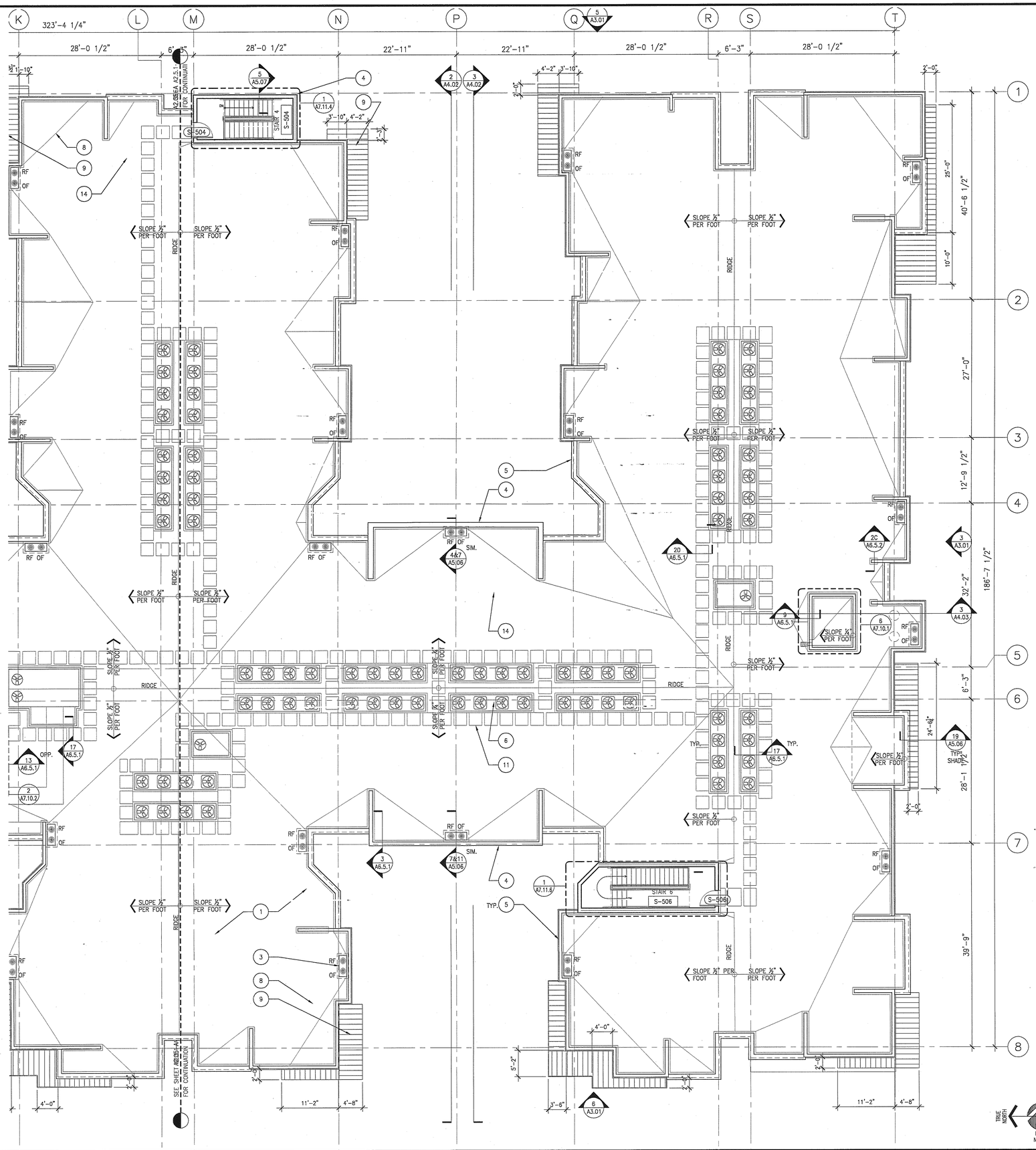

1. CLASS "A", 4-PLY BUILT UP ROOFING, REFER TO SPECIFICATION FOR COMPLETE REQUIREMENTS
2. 4" CONTINUOUS CANT STRIP
3. DRAIN AND OVERFLOW, SEE PLUMBING DRAWINGS AND DETAIL 1/A6.5.2
4. JERUSALEM STONE PARAPET CAP, SEE 11/A5.06
5. CEMENT PLASTER PARAPET CAP OVER ICE AND WATER MEMBRANE, SEE 16/A5.06
6. MECHANICAL EQUIPMENT, SEE MECHANICAL DRAWINGS
7. MECHANICAL EQUIPMENT CURB, SEE 17/A6.5.1
8. BUILT UP CRICKET
9. CANOPY BELOW, SEE BUILDING ELEVATIONS AND DETAIL 13/A6.5.2
10. MECHANICAL EXHAUST, SEE ___/___
11. WALKING PADS, SEE 20/A6.5.1
12. STUCCO DOME SEE ___/___

ROOF PLAN (SOUTH) — Scale 1/8" = 1'-0"

KEY NOTES — Scale 1

WWC OT
Widom Wein Cohen O'Leary Terasawa

3130 Wilshire Boulevard
Sixth Floor
Santa Monica, California 90403
T (310) 828-0040
F (310) 453-9432
www.wwcot.com

Inland Empire
Palm Springs
Moorpark
Shanghai, China

RECEIVED
10:08 am, Aug 14, 2008
FRAMEMAX

Building Department Submittal: June 1, 2007
Issued For Bid: _____
Issued For Construction: _____

KEY PLAN

Project:
Jewish Home for The Aging
FOUNTAINVIEW AT EISENBERG VILLAGE
6440 Wilbur Ave
Reseda, CA. 91335

JEWISH HOME FOR THE AGING
18855 Victory Blvd.
Reseda, CA 91335
Project Number: 04206.00

ROOF PLAN (SOUTH)

Date: 04/05/2007
Drawn By: _____
Checked By: _____

A2.5.1-B
Sheet No.

File Path & Name: F:\PROJECTS\04206-00\A-CD\SHEETS\A2.5.1-B.DWG
© WWCOT 2006 May 28, 2007 - 03:42 pm

RECEIVED BY SUFFOLK ON 06/01/07



ELEVATION WEST

Scale 1/16"=1'-0" 8

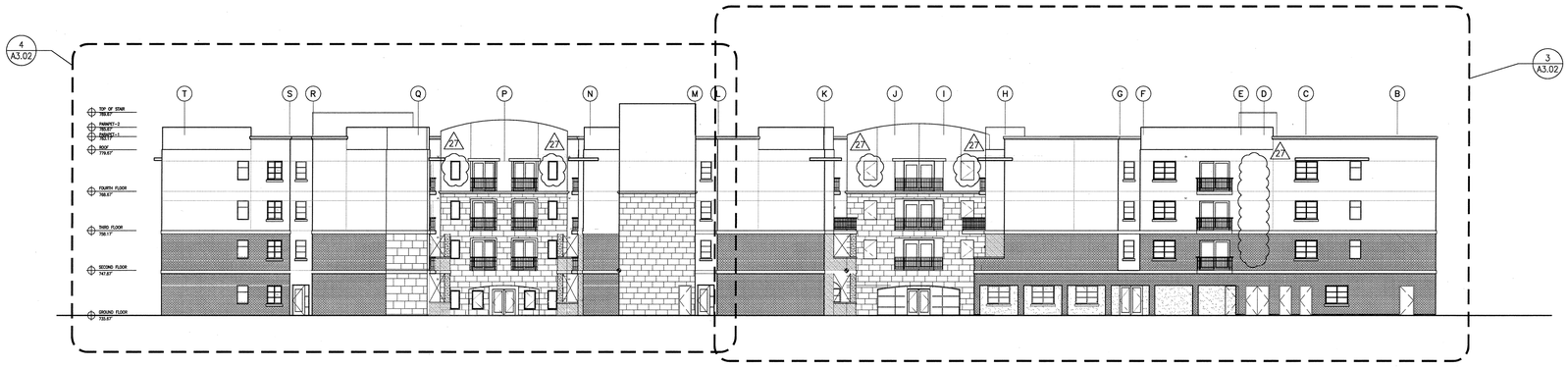

ELEVATION EAST

Scale 1/16"=1'-0" 7

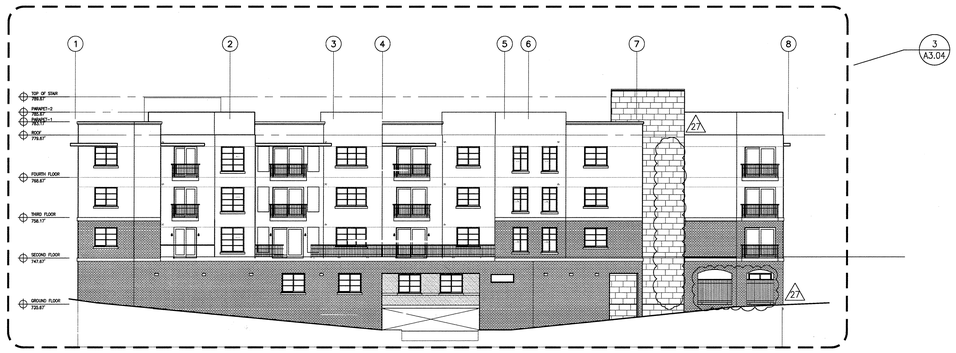

ELEVATION NORTH

Scale 1/16"=1'-0" 6



ELEVATION SOUTH

Scale 1/16"=1'-0" 5

NOT USED

Scale 2

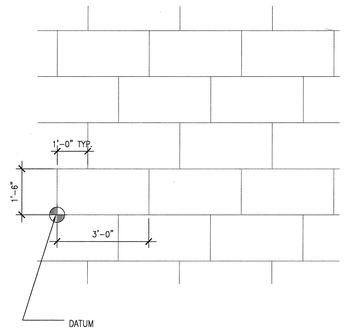

STONE PANEL JOINT PATTERN

Scale 1/2"=1'-0" 1

WWC OT
Widom Wein Cohen O'Leary Terasawa

3130 Wilshire Boulevard
Sixth Floor
Santa Monica, California 90403
T (310) 828-0040
F (310) 453-9432
www.wwcot.com

Inland Empire
Palm Springs
Moorpark
Shanghai, China

RECEIVED
10:08 am, Aug 14, 2008
FRAMEMAX

Building Department Submittal: June 1, 2007
Issued For Bid:
Issued For Construction: January 29, 2008

27 07-10-2008 PLAN/ELEVATION COORDINATION REVISIONS

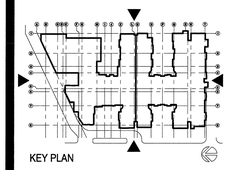

RECEIVED
AUG 04 2008
SUFFOLK CONSTRUCTION

Project:
Jewish Home for The Aging
FOUNTAINVIEW AT EISENBERG VILLAGE

6440 Wilbur Ave
Reseda, CA. 91335

JEWISH HOME

JEWISH HOME FOR THE AGING
18855 Victory Blvd.
Reseda, CA 91335
Project Number: 04206.00

ELEVATIONS

Date: 01/21/2008
Drawn By:
Checked By:

A3.01
Sheet No.

File Path & Name: F:\PROJECTS\04206-00\A-CD\SHEETS\A3.01.DWG
© WWCOT 2006 Jul 28, 2008 - 01:23 pm

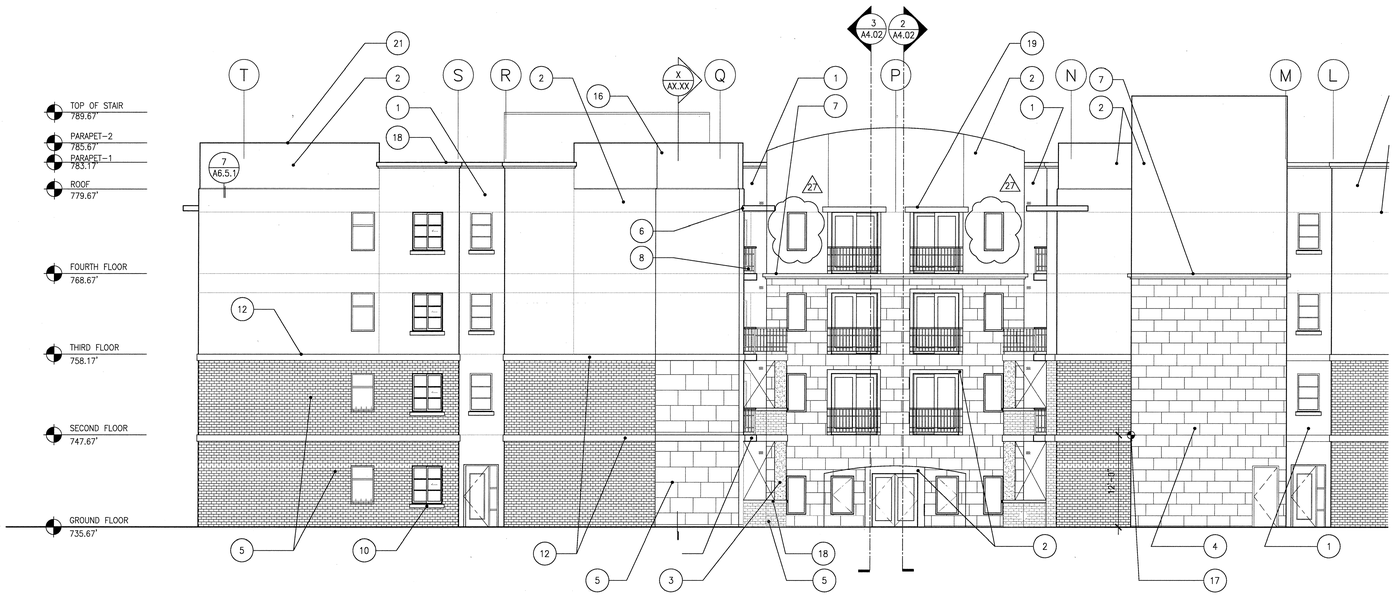

ELEVATION EAST

Scale 1/8" = 1'-0" 4



ELEVATION EAST

Scale 1/8" = 1'-0" 3

1. PORTLAND CEMENT PLASTER, INTEGRAL COLOR – 1, TYP.
2. PORTLAND CEMENT PLASTER, INTEGRAL COLOR – 2, TYP.
3. PAINT COLOR – 3, TYP.
4. JERUSALEM STONE VENEER, TYP.
5. BRICK VENEER ON PROJECT SITE TO MATCH EXISTING, TYP.
6. PAINTED ALUMINUM SUNSHADE, TYP.
7. PLASTER CAP, PAINTED
8. PREFABRICATED PRE-PAINTED METAL RAILING, TYP.
9. PLASTER REVEAL, TYP.
10. PLASTER SILL, PAINTED, TYP.
11. ~~PLASTER CONTROL JOINT, TYP.~~
12. PLASTER BAND, PAINTED, TYP.
13. ~~PLASTER CORNICE~~, PAINTED, TYP.
14. LIGHTING FIXTURE–SEE ELECTRICAL DRAWINGS, TYP.
15. DRYER VENT TO BE PLACED 3' AWAY FROM OPENING, TYP.
16. GARAGE EXHAUST LOUVER, SEE 17/A6.5.2
17. DATUM POINT FOR STONE JOINT PATTERN, SEE 1/A3.01
18. PAINTED SHEET METAL COPING AT JERUSALEM STONE, TYP.
19. PLASTER LINTEL
20. NOT USED
21. PLASTER PARAPET, PAINTED, TYP.
22. STONE CAP

KEY NOTES

Scale 3

COLOR SPECIFICATION

COLOR FAMILY:

COLOR P1 MFR.: _____ PAINT ####-### COLOR NAME; PLASTER COLOR 1
COLOR P2 MFR.: _____ PAINT ####-### COLOR NAME; PLASTER COLOR 2
COLOR P3 MFR.: _____ PAINT ####-### COLOR NAME; PLASTER COLOR 3
COLOR P4 MFR.: _____ PAINT ####-### COLOR NAME; PLASTER LINTEL BANDS TO MATCH JERUSALEM STONE SILL CAPS COLOR 4
COLOR P5 MFR.: _____ PAINT ####-### COLOR NAME; METAL

DATUM ELEVATIONS LEGEND

T.O.S. = TOP OF STRUCTURAL STEEL
T.O.D. = TOP OF METAL DECKING
T.O.P. = TOP OF PARAPET
T.O.F. = TOP OF FINISH FLOOR
T.O.R. = TOP OF FINISH ROOFING
H.P. = HIGH POINT
L.P. = LOW POINT

NOTES

1. CONTRACTOR TO PROVIDE SAMPLE COLOR FINISHES OF PLASTER SPECIFIED TO ARCHITECTS, PRIOR TO APPLICATION OF PLASTER.
2. PROVIDE GRAFFITI RESISTANT COATING AT FIRST 12' FROM GRADE AS SPECIFIED, MONOCHEM PERMA SHIELD GRAFFITI BY MONOPOLE LARR#250B0T

LEGEND

Scale 1

File Path & Name: F:\PROJECTS\04206-00\A-CD\SHEETS\A3.02.DWG
© WWCOT 2006 Jul 28, 2008 - 01:23 pm

WWC OT
Widom Wein Cohen O'Leary Terasawa

3130 Wilshire Boulevard
Sixth Floor
Santa Monica, California 90403
T (310) 828-0040
F (310) 453-9432
www.wwcot.com

Inland Empire
Palm Springs
Moorpark
Shanghai, China

RECEIVED
10:08 am, Aug 14, 2008
FRAMEMAX

Building Department Submittal: June 1, 2007
Issued For Bid: _____
Issued For Construction: January 29, 2008

27 07-10-2008 PLAN/ELEVATION COORDINATION REVISIONS

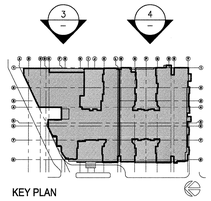

KEY PLAN

RECEIVED
AUG 04 2008
SUFFOLK CONSTRUCTION

Project:
Jewish Home for The Aging
FOUNTAINVIEW AT EISENBERG VILLAGE
6440 Wilbur Ave
Reseda, CA. 91335

JEWISH HOME FOR THE AGING
18855 Victory Blvd.
Reseda, CA 91335

Project Number: 04206.00

ELEVATION EAST

Date: 01/21/2008
Drawn By: _____
Checked By: _____

A3.02
Sheet No.

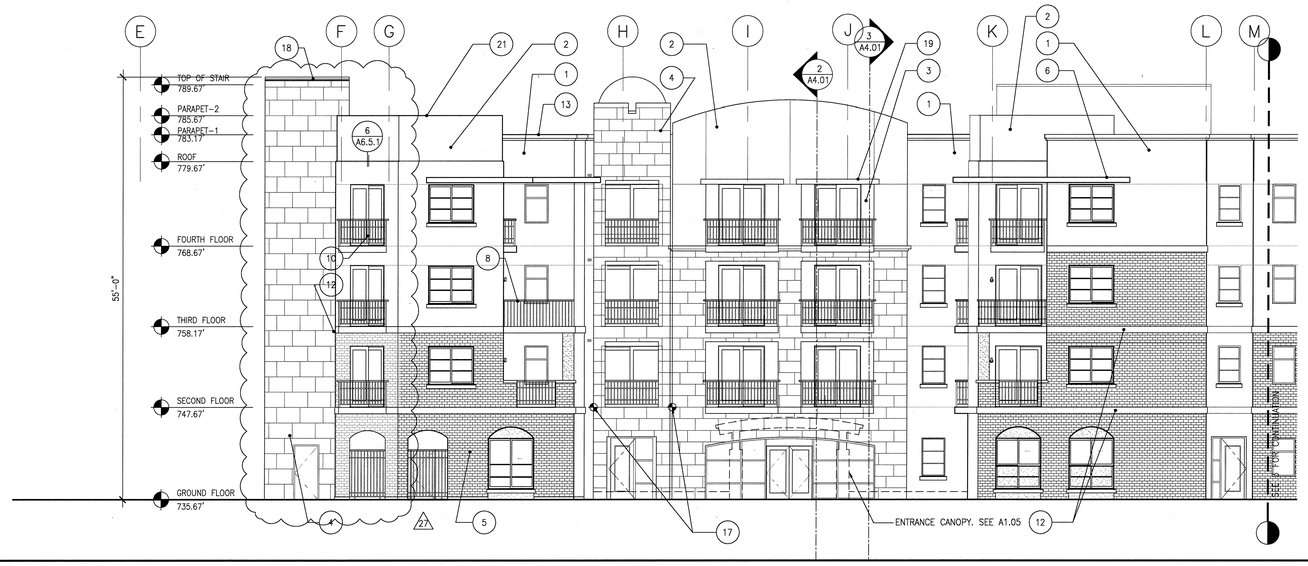

27

WEST ELEVATION

Scale 3/32" = 1'-0" 4

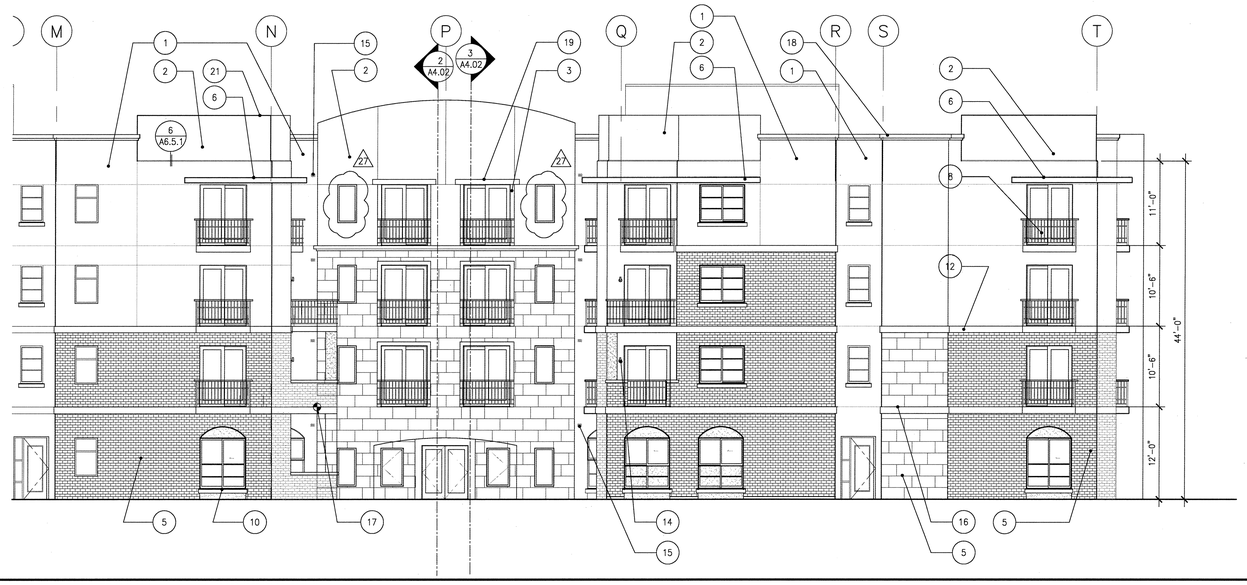

27

WEST ELEVATION

Scale 3/32" = 1'-0" 3

KEY NOTES

1. PORTLAND CEMENT PLASTER, INTEGRAL COLOR – 1, TYP.
2. PORTLAND CEMENT PLASTER, INTEGRAL COLOR – 2, TYP.
3. PAINT COLOR – 3, TYP.
4. JERUSALEM STONE VENEER, TYP.
5. BRICK VENEER ON PROJECT SITE TO MATCH EXISTING, TYP.
6. PAINTED ALUMINUM SUNSHADE, TYP.
7. PLASTER CAP, PAINTED
8. PREFABRICATED PRE-PAINTED METAL RAILING, TYP.
9. ~~PLASTER REVEAL, TYP.~~
10. PLASTER SILL, PAINTED, TYP.
11. ~~PLASTER CONTROL JOINT, TYP.~~
12. PLASTER BAND, PAINTED, TYP.
13. ~~PLASTER CORNICE, PAINTED, TYP.~~
14. LIGHTING FIXTURE-SEE ELECTRICAL DRAWINGS, TYP.
15. DRYER VENT TO BE PLACED 3' AWAY FROM OPENING, TYP.
16. ~~GARAGE EXHAUST LOUVER, SEE 17/A6.5.2~~
17. DATUM POINT FOR STONE JOINT PATTERN, SEE 1/A3.01
18. ~~PAINTED SHEET METAL COPING AT JERUSALEM STONE, TYP.~~
19. PLASTER LINTEL
20. NOT USED
21. PLASTER PARAPET, PAINTED, TYP.
22. STONE CAP

COLOR SPECIFICATION

COLOR FAMILY:

COLOR P1 MFR.: _____ PAINT ####-### COLOR NAME; PLASTER COLOR 1
COLOR P2 MFR.: _____ PAINT ####-### COLOR NAME; PLASTER COLOR 2
COLOR P3 MFR.: _____ PAINT ####-### COLOR NAME; PLASTER COLOR 3
COLOR P4 MFR.: _____ PAINT ####-### COLOR NAME; PLASTER LINTEL BANDS TO MATCH JERUSALEM STONE SILL CAPS COLOR 4
COLOR P5 MFR.: _____ PAINT ####-### COLOR NAME; METAL

DATUM ELEVATIONS LEGEND

T.O.S. = TOP OF STRUCTURAL STEEL
T.O.D. = TOP OF METAL DECKING
T.O.P. = TOP OF PARAPET
T.O.F. = TOP OF FINISH FLOOR
T.O.R. = TOP OF FINISH ROOFING
H.P. = HIGH POINT
L.P. = LOW POINT

NOTES

1. CONTRACTOR TO PROVIDE SAMPLE COLOR FINISHES OF PLASTER SPECIFIED TO ARCHITECTS, PRIOR TO APPLICATION OF PLASTER.
2. PROVIDE GRAFFITI RESISTANT COATING AT FIRST 12' FROM GRADE AS SPECIFIED, MONOCHEM PERMA SHIELD GRAFFITI BY MONOPOLE LARR#250B0T

KEY NOTES — Scale 3

LEGEND — Scale 1

File Path & Name: F:\PROJECTS\04206-00\A-CD\SHEETS\A3.03.DWG
© WWCOT 2006 Jul 28, 2008 - 01:24 pm

WWC OT
Widom Wein Cohen O'Leary Terasawa

3130 Wilshire Boulevard
Sixth Floor
Santa Monica, California 90403
T (310) 828-0040
F (310) 453-9432
www.wwcot.com

Inland Empire
Palm Springs
Moorpark
Shanghai, China

RECEIVED
10:08 am, Aug 14, 2008
FRAMEMAX

Building Department Submittal: June 1, 2007
Issued For Bid: _____
Issued For Construction: January 29, 2008

27 07-10-2008 PLAN/ELEVATION COORDINATION REVISIONS

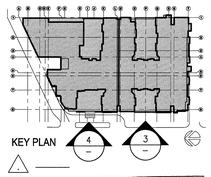

RECEIVED
AUG 04 2008
SUFFOLK CONSTRUCTION

Project:
Jewish Home for The Aging
FOUNTAINVIEW AT EISENBERG VILLAGE

6440 Wilbur Ave
Reseda, CA. 91335

JEWISH HOME FOR THE AGING
18855 Victory Blvd.
Reseda, CA 91335

Project Number: 04206.00

ELEVATION WEST

Date: 01/21/2008
Drawn By: _____
Checked By: _____

A3.03
Sheet No.

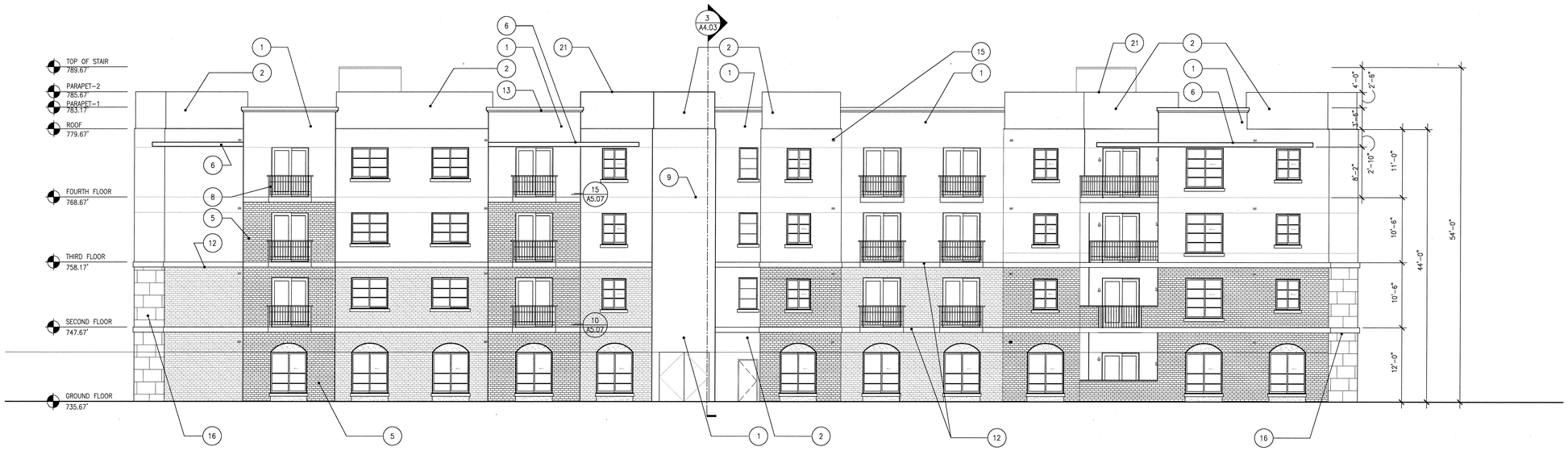

ELEVATION SOUTH

Scale 1/8" = 1'-0" — 4 — DWG

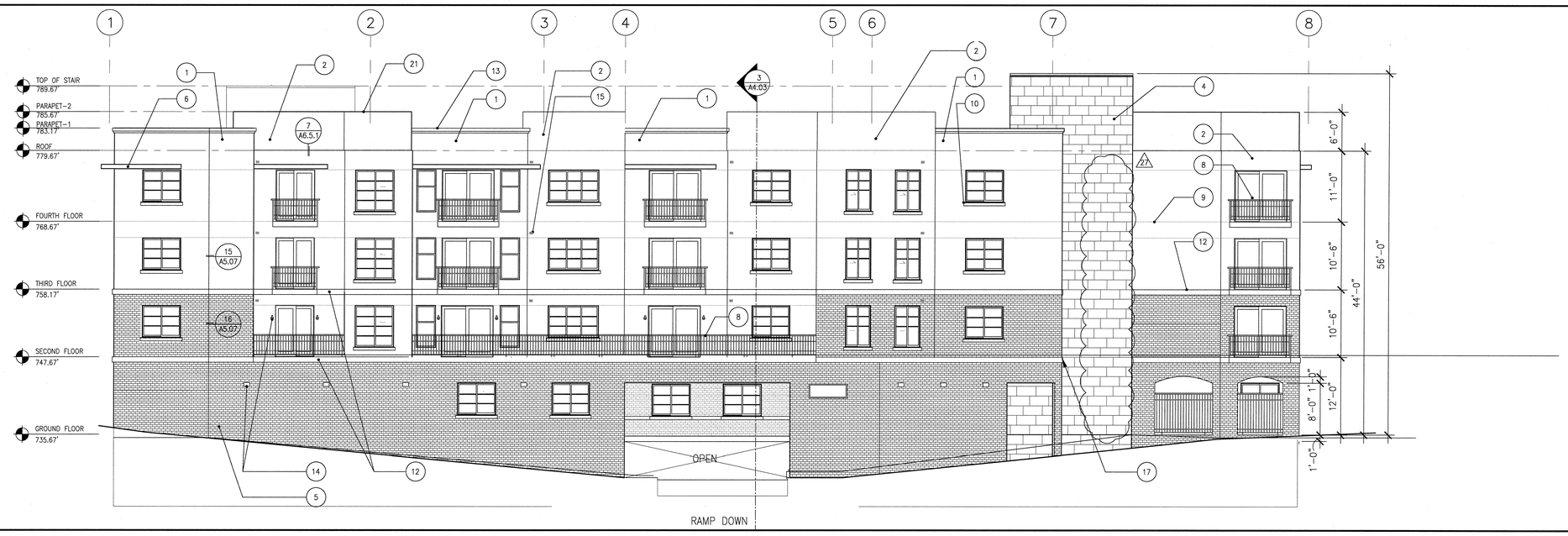

ELEVATION NORTH

Scale 1/8" = 1'-0" — 3 — DWG

1. PORTLAND CEMENT PLASTER, INTEGRAL COLOR – 1, TYP.
2. PORTLAND CEMENT PLASTER, INTEGRAL COLOR – 2, TYP.
3. ~~PAINT COLOR – 3, TYP.~~
4. JERUSALEM STONE VENEER, TYP.
5. BRICK VENEER ON PROJECT SITE TO MATCH EXISTING, TYP.
6. PAINTED ALUMINUM SUNSHADE, TYP.
7. PLASTER CAP, PAINTED
8. PREFABRICATED PRE-PAINTED METAL RAILING, TYP.
9. PLASTER REVEAL, TYP.
10. PLASTER SILL, PAINTED, TYP.
11. ~~PLASTER CONTROL JOINT, TYP.~~
12. PLASTER BAND, PAINTED, TYP.
13. ~~PLASTER CORNICE~~, PAINTED, TYP.
14. LIGHTING FIXTURE–SEE ELECTRICAL DRAWINGS, TYP.
15. DRYER VENT TO BE PLACED 3' AWAY FROM OPENING, TYP.
16. GARAGE EXHAUST LOUVER, SEE 17/A6.5.2
17. DATUM POINT FOR STONE JOINT PATTERN, SEE 1/A3.01
18. ~~PAINTED SHEET METAL COPING AT JERUSALEM STONE, TYP.~~
19. PLASTER LINTEL
20. NOT USED
21. PLASTER PARAPET, PAINTED, TYP.
22. STONE CAP

KEY NOTES

Scale 3 — —.DWG

COLOR SPECIFICATION

COLOR FAMILY:

COLOR P1 MFR.: _____ PAINT ####-### COLOR NAME: PLASTER COLOR 1
COLOR P2 MFR.: _____ PAINT ####-### COLOR NAME: PLASTER COLOR 2
COLOR P3 MFR.: _____ PAINT ####-### COLOR NAME: PLASTER COLOR 3
COLOR P4 MFR.: _____ PAINT ####-### COLOR NAME: PLASTER LINTEL BANDS TO MATCH JERUSALEM STONE SILL CAPS COLOR 4
COLOR P5 MFR.: _____ PAINT ####-### COLOR NAME: METAL

DATUM ELEVATIONS LEGEND

T.O.S. = TOP OF STRUCTURAL STEEL
T.O.D. = TOP OF METAL DECKING
T.O.P. = TOP OF PARAPET
T.O.F. = TOP OF FINISH FLOOR
T.O.R. = TOP OF FINISH ROOFING
H.P. = HIGH POINT
L.P. = LOW POINT

NOTES

1. CONTRACTOR TO PROVIDE SAMPLE COLOR FINISHES OF PLASTER SPECIFIED TO ARCHITECTS, PRIOR TO APPLICATION OF PLASTER.
2. PROVIDE GRAFFITI RESISTANT COATING AT FIRST 12' FROM GRADE AS SPECIFIED, MONOCHEM PERMA SHIELD GRAFFITI BY MONOPOLE LARR#25080T

LEGEND

Scale 1 — —.DWG

WWC OT
Widom Wein Cohen O'Leary Terasawa

3130 Wilshire Boulevard
Sixth Floor
Santa Monica, California 90403
T (310) 828-0040
F (310) 453-9432
www.wwcot.com

Inland Empire
Palm Springs
Moorpark
Shanghai, China

RECEIVED
10:08 am, Aug 14, 2008
FRAMEMAX

Building Department Submittal: June 1, 2007
Issued For Bid: _____
Issued For Construction: January 29, 2008

27 07-10-2008 PLAN/ELEVATION COORDINATION REVISIONS

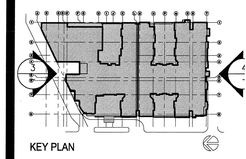

KEY PLAN

RECEIVED
AUG 04 2008
SUFFOLK CONSTRUCTION

Project:
Jewish Home for The Aging
FOUNTAINVIEW AT EISENBERG VILLAGE
6440 Wilbur Ave
Reseda, CA. 91335

JEWISH HOME FOR THE AGING
18855 Victory Blvd.
Reseda, CA 91335
Project Number: 04206.00

ELEVATIONS NORTH & SOUTH

Date: 01/21/2008
Drawn By: _____
Checked By: _____

A3.04
Sheet No.

File Path & Name: F:\PROJECTS\04206-00\A-CD\SHEETS\A3.04.DWG
© WWCOT 2006 Jul 28, 2008 - 01:24 pm

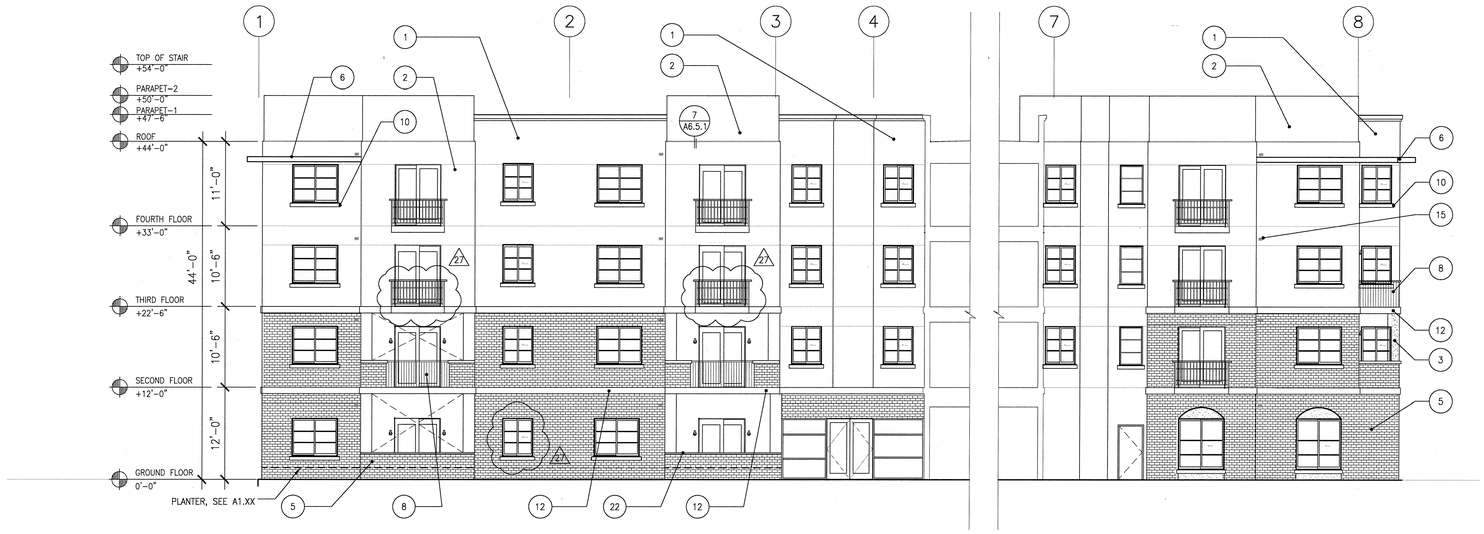

COURTYARD ELEVATIONS

Scale 1/8" = 1'-0" — 4

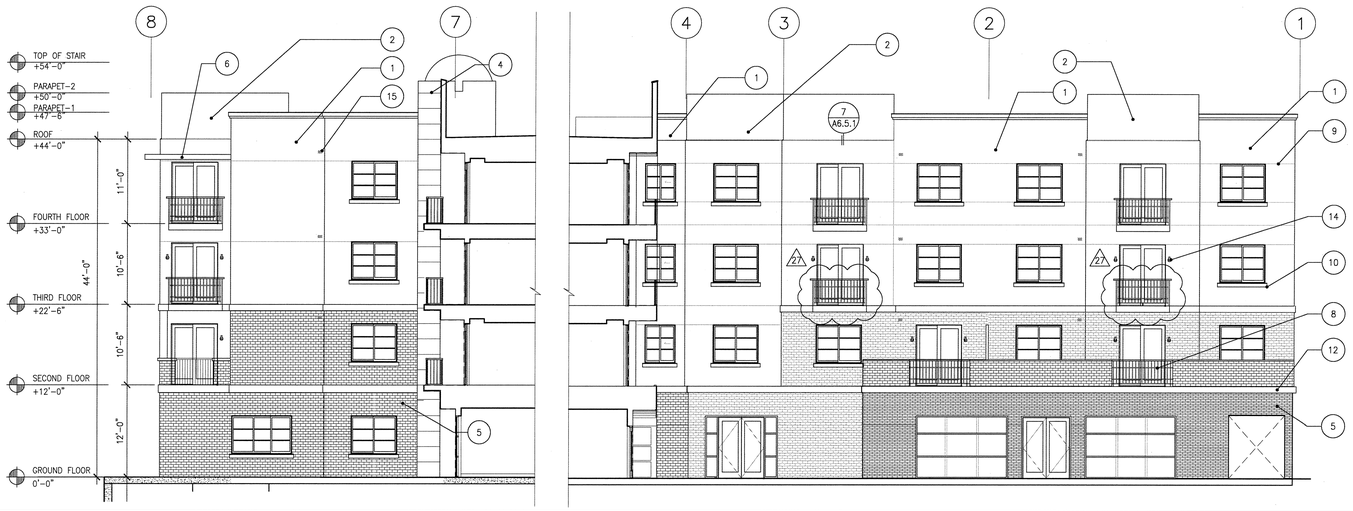

COURTYARD ELEVATION

Scale 1/8" = 1'-0" — 3

1	PORTLAND CEMENT PLASTER, INTEGRAL COLOR – 1, TYP.	14	LIGHTING FIXTURE–SEE ELECTRICAL DRAWINGS, TYP.
2	PORTLAND CEMENT PLASTER, INTEGRAL COLOR – 2, TYP.	15	DRYER VENT TO BE PLACED 3' AWAY FROM OPENING, TYP.
~~3~~	~~PAINT COLOR – 3, TYP.~~	~~16~~	~~GARAGE EXHAUST LOUVER, SEE 17/A6.5.2~~
~~4~~	~~JERUSALEM STONE VENEER, TYP.~~	~~17~~	~~DATUM POINT FOR STONE JOINT PATTERN,~~ SEE 1/A3.01
5	BRICK VENEER ON PROJECT SITE TO MATCH EXISTING, TYP.	~~18~~	~~PAINTED SHEET METAL COPING AT JERUSALEM STONE, TYP.~~
6	PAINTED ALUMINUM SUNSHADE, TYP.	19	PLASTER LINTEL
~~7~~	~~PLASTER CAP, PAINTED~~	20	NOT USED
8	PREFABRICATED PRE-PAINTED METAL RAILING, TYP.	21	PLASTER PARAPET, PAINTED, TYP.
9	PLASTER REVEAL, TYP.	22	STONE CAP
10	PLASTER SILL, PAINTED, TYP.		
~~11~~	~~PLASTER CONTROL JOINT, TYP.~~		
12	PLASTER BAND, PAINTED, TYP.		
~~13~~	~~PLASTER CORNICE~~, PAINTED, TYP.		

KEY NOTES

COLOR SPECIFICATION

COLOR FAMILY:

COLOR P1 MFR.: _____ PAINT ####-### COLOR NAME: PLASTER COLOR 1
COLOR P2 MFR.: _____ PAINT ####-### COLOR NAME: PLASTER COLOR 2
COLOR P3 MFR.: _____ PAINT ####-### COLOR NAME: PLASTER COLOR 3
COLOR P4 MFR.: _____ PAINT ####-### COLOR NAME: PLASTER LINTEL BANDS TO MATCH JERUSALEM STONE SILL CAPS COLOR 4
COLOR P5 MFR.: _____ PAINT ####-### COLOR NAME: METAL

Scale 3

DATUM ELEVATIONS LEGEND

T.O.S. = TOP OF STRUCTURAL STEEL
T.O.D. = TOP OF METAL DECKING
T.O.P. = TOP OF PARAPET
T.O.F. = TOP OF FINISH FLOOR
T.O.R. = TOP OF FINISH ROOFING
H.P. = HIGH POINT
L.P. = LOW POINT

NOTES

1. CONTRACTOR TO PROVIDE SAMPLE COLOR FINISHES OF PLASTER SPECIFIED TO ARCHITECTS, PRIOR TO APPLICATION OF PLASTER.
2. PROVIDE GRAFFITI RESISTANT COATING AT FIRST 12' FROM GRADE AS SPECIFIED, MONOCHEM PERMA SHIELD GRAFFITI BY MONOPOLE LARR#250801

LEGEND

Scale 1

WWC OT
Widom Wein Cohen O'Leary Terasawa

3130 Wilshire Boulevard
Sixth Floor
Santa Monica, California 90403
T (310) 828-0040
F (310) 453-9432
www.wwcot.com

Inland Empire
Palm Springs
Moorpark
Shanghai, China

RECEIVED
10:08 am, Aug 14, 2008
FRAMEMAX

Building Department Submittal: June 1, 2007
Issued For Bid: _____
Issued For Construction: January 29, 2008

27 07-10-2008 PLAN/ELEVATION COORDINATION REVISIONS

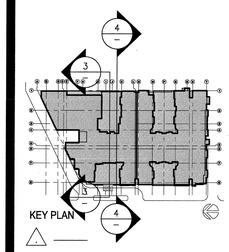

RECEIVED
AUG 04 2008
SUFFOLK CONSTRUCTION

Project:
Jewish Home for The Aging
FOUNTAINVIEW AT EISENBERG VILLAGE
6440 Wilbur Ave
Reseda, CA. 91335

JEWISH HOME FOR THE AGING
18855 Victory Blvd.
Reseda, CA 91335

Project Number: 04206.00

Courtyard Elevations

Date: 01/21/2008
Drawn By: _____
Checked By: _____

A3.05
Sheet No.

File Path & Name: F:\PROJECTS\04206-00\A-CD\SHEETS\A3.05.DWG
© WWCOT 2006 Jul 28, 2008 - 01:24 pm

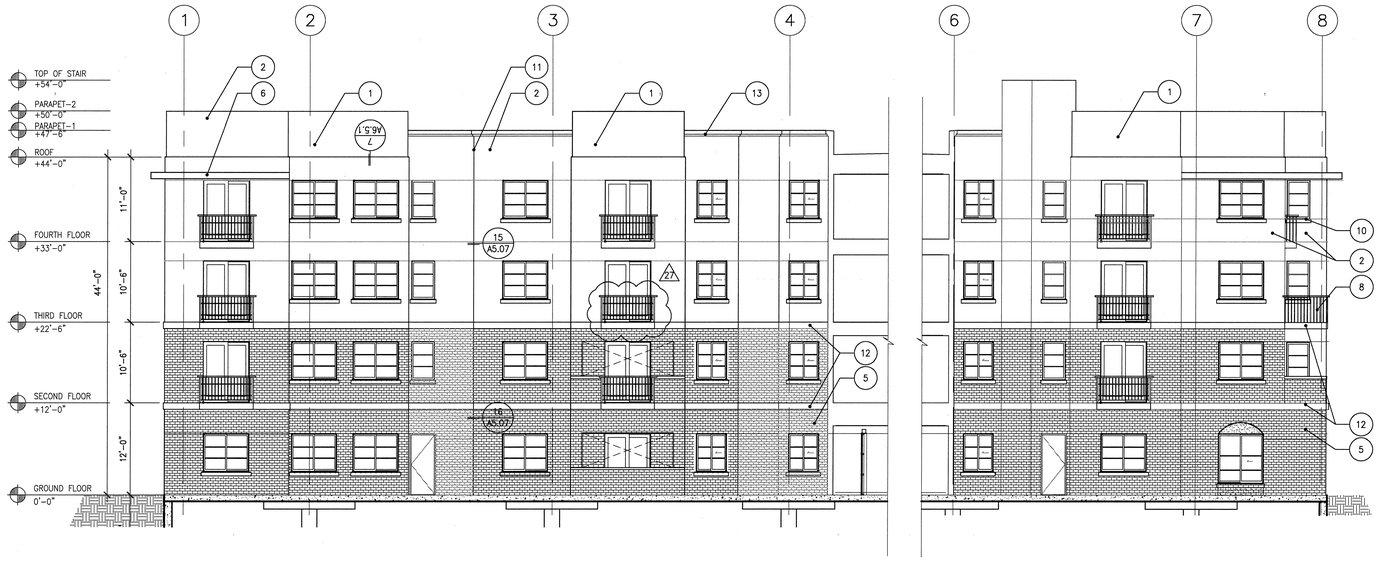

COURTYARD ELEVATION

Scale 1/8" = 1'-0" — 4

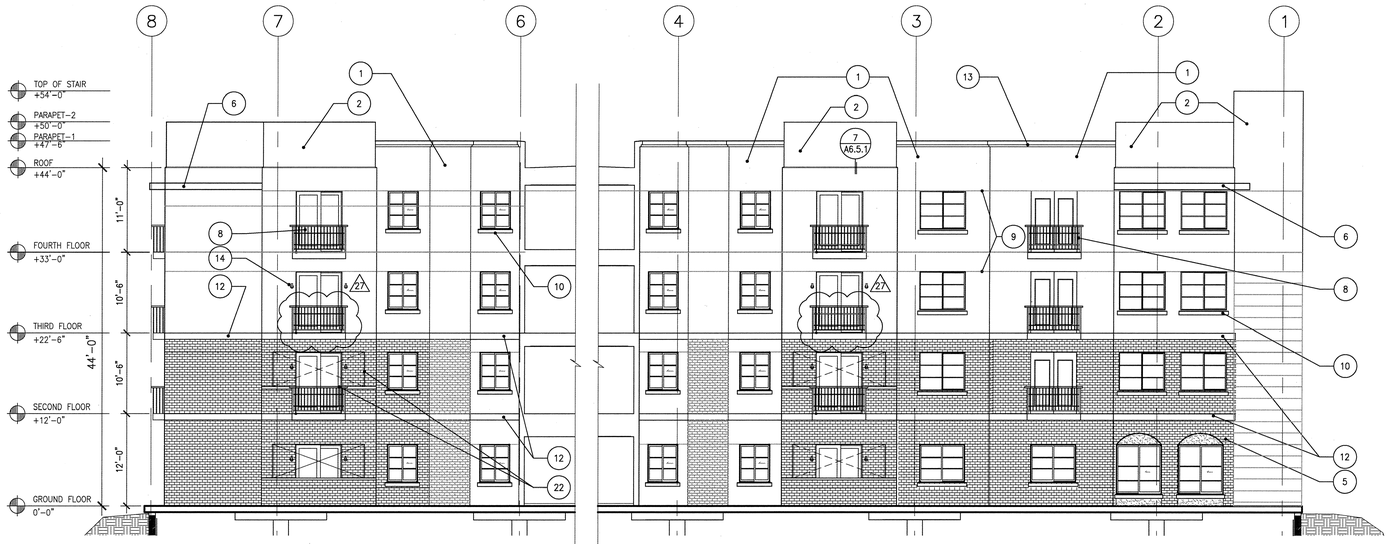

COURTYARD ELEVATIONS

Scale 1/8" = 1'-0" — 3

KEY NOTES

1. PORTLAND CEMENT PLASTER, INTEGRAL COLOR – 1, TYP.
2. PORTLAND CEMENT PLASTER, INTEGRAL COLOR – 2, TYP.
3. ~~PAINT COLOR – 3, TYP.~~
4. ~~JERUSALEM STONE VENEER, TYP.~~
5. BRICK VENEER ON PROJECT SITE TO MATCH EXISTING, TYP.
6. PAINTED ALUMINUM SUNSHADE, TYP.
7. ~~PLASTER CAP, PAINTED~~
8. PREFABRICATED PRE-PAINTED METAL RAILING, TYP.
9. PLASTER REVEAL, TYP.
10. PLASTER SILL, PAINTED, TYP.
11. PLASTER CONTROL JOINT, TYP.
12. PLASTER BAND, PAINTED, TYP.
13. PLASTER CORNICE, PAINTED, TYP.
14. LIGHTING FIXTURE–SEE ELECTRICAL DRAWINGS, TYP.
15. ~~DRYER VENT TO BE PLACED 3' AWAY FROM OPENING, TYP.~~
16. ~~GARAGE EXHAUST LOUVER, SEE 17/A6.5.2~~
17. ~~DATUM POINT FOR STONE JOINT PATTERN, SEE 1/A3.01~~
18. ~~PAINTED SHEET METAL COPING AT JERUSALEM STONE, TYP.~~
19. ~~PLASTER LINTEL~~
20. ~~NOT USED~~
21. ~~PLASTER PARAPET, PAINTED, TYP.~~
22. ~~STONE CAP~~

Scale 3

COLOR SPECIFICATION

COLOR FAMILY:

COLOR P1 MFR.: _____ PAINT ####-### COLOR NAME; PLASTER COLOR 1
COLOR P2 MFR.: _____ PAINT ####-### COLOR NAME; PLASTER COLOR 2
COLOR P3 MFR.: _____ PAINT ####-### COLOR NAME; PLASTER COLOR 3
COLOR P4 MFR.: _____ PAINT ####-### COLOR NAME; PLASTER LINTEL BANDS TO MATCH JERUSALEM STONE SILL CAPS COLOR 4
COLOR P5 MFR.: _____ PAINT ####-### COLOR NAME; METAL

DATUM ELEVATIONS LEGEND

T.O.S. = TOP OF STRUCTURAL STEEL
T.O.D. = TOP OF METAL DECKING
T.O.P. = TOP OF PARAPET
T.O.F. = TOP OF FINISH FLOOR
T.O.R. = TOP OF FINISH ROOFING
H.P. = HIGH POINT
L.P. = LOW POINT

NOTES

1. CONTRACTOR TO PROVIDE SAMPLE COLOR FINISHES OF PLASTER SPECIFIED TO ARCHITECTS, PRIOR TO APPLICATION OF PLASTER.
2. PROVIDE GRAFFITI RESISTANT COATING AT FIRST 12' FROM GRADE AS SPECIFIED, MONOCHEM PERMA SHIELD GRAFFITI BY MONOPOLE LARR#25080T

LEGEND

Scale 1

WWC OT
Widom Wein Cohen O'Leary Terasawa

3130 Wilshire Boulevard
Sixth Floor
Santa Monica, California 90403
T (310) 828-0040
F (310) 453-9432
www.wwcot.com

Inland Empire
Palm Springs
Moorpark
Shanghai, China

RECEIVED
10:08 am, Aug 14, 2008
FRAMEMAX

Building Department Submittal: June 1, 2007
Issued For Bid: _____
Issued For Construction: January 29, 2008

27 07-10-2008 PLAN/ELEVATION COORDINATION REVISIONS

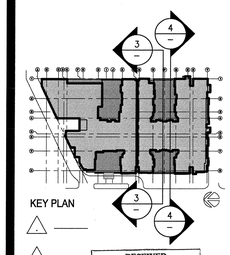

RECEIVED
AUG 04 2008
SUFFOLK CONSTRUCTION

Project:
Jewish Home for The Aging
FOUNTAINVIEW AT EISENBERG VILLAGE

6440 Wilbur Ave
Reseda, CA. 91335

JEWISH HOME FOR THE AGING
18855 Victory Blvd.
Reseda, CA 91335

Project Number: 04206.00

Courtyard Elevations

Date: 01/21/2008
Drawn By: _____
Checked By: _____

A3.06
Sheet No.

File Path & Name: F:\PROJECTS\04206.00\A-CDSHEETS\A3.06.DWG
© WWCOT 2006 Jul 28, 2008 - 01:24 pm

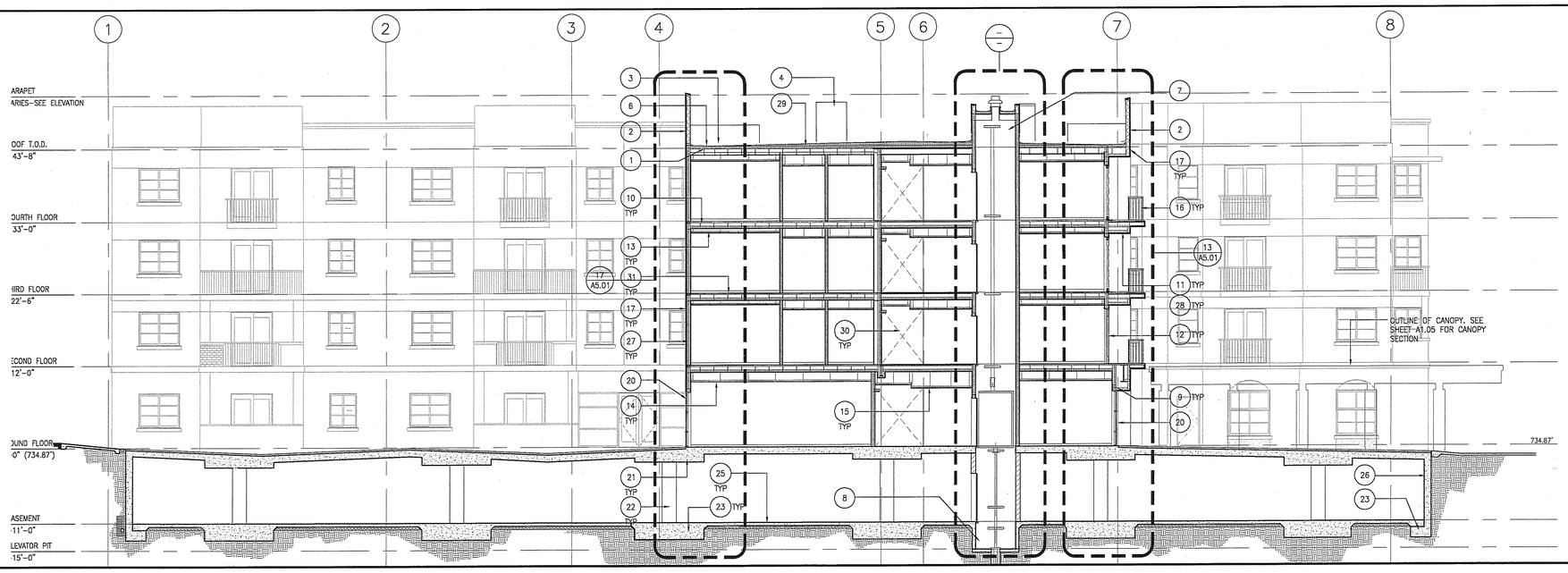

TRANSVERSE BUILDING SECTION

Scale 1/8" = 1'-0" 3

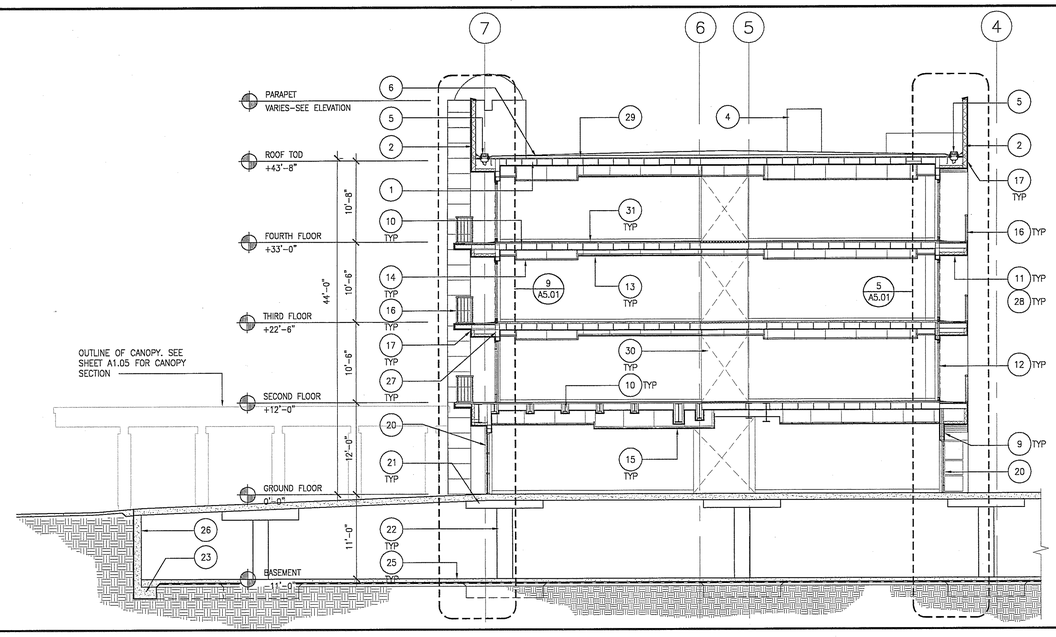

TRANSVERSE BUILDING SECTION

Scale 1/8" = 1'-0" 2

1. ROOF FRAMING. SEE STRUCTURAL DRAWINGS
2. PARAPET WALL
3. CLASS A BUILT–UP ROOFING SYSTEM
4. ROOFTOP MECHANICAL EQUIPMENT. SEE MECHANICAL DRAWINGS
5. ROOF DRAIN
6. TAPERED INSULATION SLOPED TO DRAIN. SEE ROOF PLAN
7. ELEVATOR PENTHOUSE
8. ELEVATOR PIT
9. 7/8" EXTERIOR PLASTER OVER METAL LATH OVER 2 LAYERS OF BUILDING PAPER OVER 1/2" GYP. BD SHEATHING
10. FLOOR FRAMING. SEE STRUCTURAL DRAWINGS
11. PLASTER SOFFIT
12. SLIDING BALCONY DOOR PER DOOR SCHEDULE
13. 5/8" SUSPENDED GYP. BD CEILING SYSTEM. SEE REFLECTED CEILING PLAN
14. SUSPENDED ACOUSTICAL CEILING SYSTEM. SEE REFLECTED CEILING PLAN
15. SUSPENDED WOOD SLAT CEILING SYSTEM. SEE REFLECTED CEILING PLAN
16. PREFABRICATED PRE–PAINTED STEEL GUARDRAIL AT BALCONY
17. JERUSALEM STONE VENEER
18. BRICK VENEER
19. WINDOW PER WINDOW SCHEDULE
20. ENTRY DOOR PER DOOR SCHEDULE
21. CONCRETE DROP PANEL. SEE STRUCTURAL DRAWINGS
22. CONCRETE COLUMN BEYOND. SEE STRUCTURAL DRAWINGS
23. CONCRETE FOOTING. SEE STRUCTURAL DRAWINGS
25. CONCRETE SLAB. SEE STRUCTURAL DRAWINGS
26. CONCRETE WALL. SEE STRUCTTIRAL DRAWINGS
27. METAL STUD WALL
28. METAL STUD SOFFIT FRAMING
29. STEEL ROOF DECK. SEE STRUCTURAL DRAWINGS
30. CORRIDOR OPENING
31. LEVELROCK OVER STEEL DECK. SEE STRUCTURAL DRAWINGS

Keynotes

Scale 5

DATUM ELEVATIONS LEGEND

T.O.S. = TOP OF STRUCTURAL STEEL
T.O.D. = TOP OF METAL DECKING
T.O.P. = TOP OF PARAPET
T.O.F. = TOP OF FINISH FLOOR
T.O.R. = TOP OF FINISH ROOFING
H.P. = HIGH POINT
L.P. = LOW POINT

GENERAL NOTES:

1. CONTRACTOR TO PROVIDE SAMPLE COLOR FINISHES OF PLASTER TO ARCHITECTS SPECIFIED, PRIOR TO APPLICATION OF PLASTER.

FIRE SAFING NOTES:

1. FIRE SAFING NOTE:
FORMING MATERIAL: MIN. 4.0 pcf MINERAL WOOL BATT INSULATION INSTALLED IN LINEAR GAP IN BETWEEN EXTERIOR METAL STUDS AT EVERY FLOOR LEVEL AS PERMANENT ASSAMBLY. MATERIAL TO BE CUT TO A 4 ¼" DEPTH AND STACKED TO A THIKNESS WHICH IS AT LEAST 25 % GREATER THAN THE WIDTH OF THE LINEAR GAP. THE MATERIAL IS COMPRESSED AND INSERTED CUT–EDGE FIRST INTO THE LINEAR GAP AND RECESSED FROM TOP SURFACE OF FLOOR TO ACCOMODATE THE DESIRED THIKNESS OF FILL MATERIAL.
FILL: MIN. ¼" THICKNESS OF FILL MATERIAL APPLIED WITH THE JOINT, FLUSH WITH TOP SURFACE OF FLOOR

Sections General Notes

Scale 1

WWCOT
Widom Wein Cohen O'Leary Terasawa

3130 Wilshire Boulevard
Sixth Floor
Santa Monica, California 90403
T (310) 828-0040
F (310) 453-9432
www.wwcot.com

Inland Empire
Palm Springs
Moorpark
Shanghai, China

RECEIVED
10:08 am, Aug 14, 2008
FRAMEMAX

Building Department Submittal: June 1, 2007
Issued For Bid:
Issued For Construction:

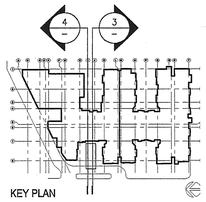

KEY PLAN

Project:
Jewish Home for The Aging
FOUNTAINVIEW AT EISENBERG VILLAGE

6440 Wilbur Ave
Reseda, CA. 91335

JEWISH HOME FOR THE AGING
18855 Victory Blvd.
Reseda, CA 91335
Project Number: 04206.00

Transverse Building Sections (NORTH)

Date: 04/05/2007
Drawn By:
Checked By:

A4.01
Sheet No.

File Path & Name: F:\PROJECTS\04206-00\A-CD\SHEETS\A4.01.DWG
© WWCOT 2006 May 28, 2007 - 03:43 pm

RECEIVED BY SUFFOLK ON 06/01/07

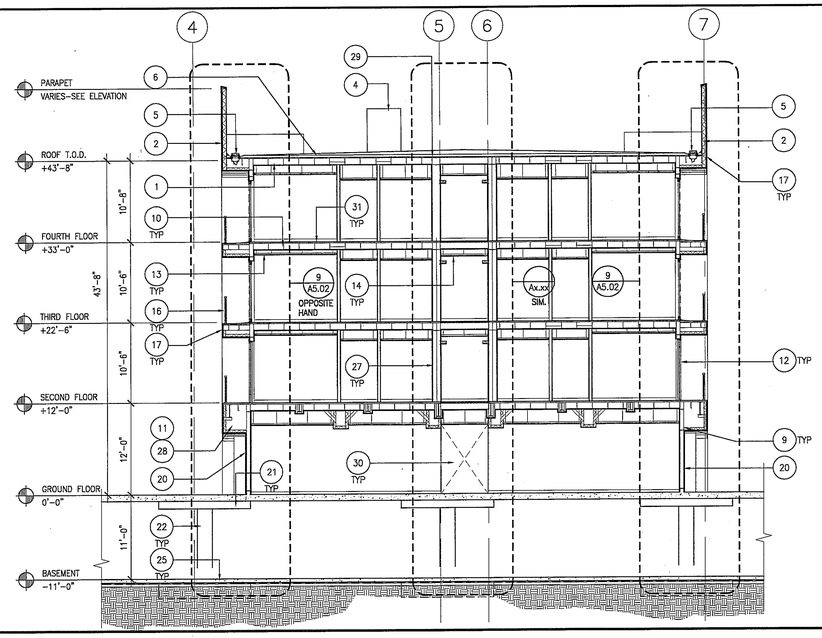

TRANSVERSE BUILDING SECTION

Scale 1/8" = 1'-0" 3

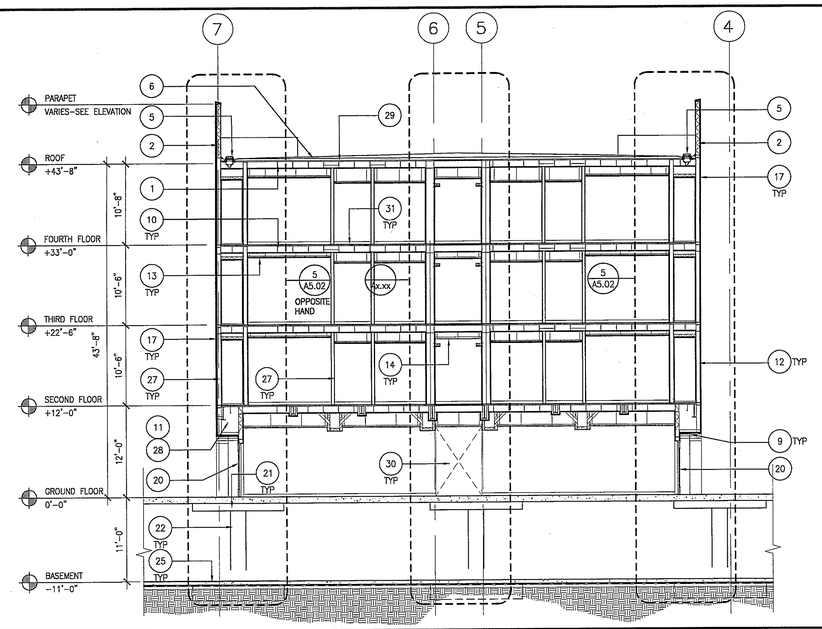

TRANSVERSE BUILDING SECTION

Scale 1/8" = 1'-0" 2

1. ROOF FRAMING. SEE STRUCTURAL DRAWINGS
2. PARAPET WALL
3. CLASS A BUILT–UP ROOFING SYSTEM
4. ROOFTOP MECHANICAL EQUIPMENT. SEE MECHANICAL DRAWINGS
5. ROOF DRAIN
6. TAPERED INSULATION SLOPED TO DRAIN. SEE ROOF PLAN
7. ELEVATOR PENTHOUSE
8. ELEVATOR PIT
9. 7/8" EXTERIOR PLASTER OVER METAL LATH OVER 2 LAYERS OF BUILDING PAPER OVER 1/2" GYP. BD SHEATHING
10. FLOOR FRAMING. SEE STRUCTURAL DRAWINGS
11. PLASTER SOFFIT
12. SLIDING BALCONY DOOR PER DOOR SCHEDULE
13. 5/8" SUSPENDED GYP. BD CEILING SYSTEM. SEE REFLECTED CEILING PLAN
14. SUSPENDED ACOUSTICAL CEILING SYSTEM. SEE REFLECTED CEILING PLAN
15. SUSPENDED WOOD SLAT CEILING SYSTEM. SEE REFLECTED CEILING PLAN
16. PREFABRICATED PRE–PAINTED STEEL GUARDRAIL AT BALCONY
17. JERUSALEM STONE VENEER
18. BRICK VENEER
19. WINDOW PER WINDOW SCHEDULE
20. ENTRY DOOR PER DOOR SCHEDULE
21. CONCRETE DROP PANEL. SEE STRUCTURAL DRAWINGS
22. CONCRETE COLUMN BEYOND. SEE STRUCTURAL DRAWINGS
23. CONCRETE FOOTING. SEE STRUCTURAL DRAWINGS
25. CONCRETE SLAB. SEE STRUCTURAL DRAWINGS
26. CONCRETE WALL. SEE STRUCTRAL DRAWINGS
27. METAL STUD WALL
28. METAL STUD SOFFIT FRAMING
29. STEEL ROOF DECK. SEE STRUCTURAL DRAWINGS
30. CORRIDOR OPENING
31. LEVELROCK OVER STEEL DECK. SEE STRUCTURAL DRAWINGS

Keynotes

Scale 5

DATUM ELEVATIONS LEGEND

T.O.S. = TOP OF STRUCTURAL STEEL
T.O.D. = TOP OF METAL DECKING
T.O.P. = TOP OF PARAPET
T.O.F. = TOP OF FINISH FLOOR
T.O.R. = TOP OF FINISH ROOFING
H.P. = HIGH POINT
L.P. = LOW POINT

GENERAL NOTES:

1. CONTRACTOR TO PROVIDE SAMPLE COLOR FINISHES OF PLASTER TO ARCHITECTS SPECIFIED, PRIOR TO APPLICATION OF PLASTER.

FIRE SAFING NOTES:

1. FIRE SAFING NOTE:
FORMING MATERIAL: MIN. 4.0 pcf MINERAL WOOL BATT INSULATION INSTALLED IN LINEAR GAP IN BETWEEN EXTERIOR METAL STUDS AT EVERY FLOOR LEVEL AS PERMANENT ASSAMBLY. MATERIAL TO BE CUT TO A 4 ¼" DEPTH AND STACKED TO A THIKNESS WHICH IS AT LEAST 25 % GREATER THAN THE WIDTH OF THE LINEAR GAP. THE MATERIAL IS COMPRESSED AND INSERTED CUT–EDGE FIRST INTO THE LINEAR GAP AND RECESSED FROM TOP SURFACE OF FLOOR TO ACCOMODATE THE DESIRED THIKNESS OF FILL MATERIAL.
FILL: MIN. ¼" THICKNESS OF FILL MATERIAL APPLIED WITH THE JOINT, FLUSH WITH TOP SURFACE OF FLOOR

Sections General Notes

Scale 1

WWC OT
Widom Wein Cohen O'Leary Terasawa

3130 Wilshire Boulevard
Sixth Floor
Santa Monica, California 90403
T (310) 828-0040
F (310) 453-9432
www.wwcot.com

Inland Empire
Palm Springs
Moorpark
Shanghai, China

RECEIVED
10:08 am, Aug 14, 2008
FRAMEMAX

Building Department Submittal: June 1, 2007
Issued For Bid:
Issued For Construction:

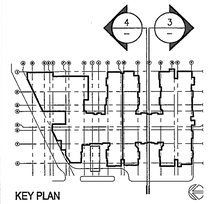

KEY PLAN

Project:
Jewish Home for The Aging
FOUNTAINVIEW AT EISENBERG VILLAGE
6440 Wilbur Ave
Reseda, CA. 91335

JEWISH HOME
JEWISH HOME FOR THE AGING
18855 Victory Blvd.
Reseda, CA 91335

Project Number: 04206.00

Transverse Buiding Sections (SOUTH)

Date: 04/05/2007
Drawn By:
Checked By:

A4.02
Sheet No.

File Path & Name: F:\PROJECTS\04206-00\A-CD\SHEETS\A4.02.DWG
© WWCOT 2006 May 28, 2007 - 03:43 pm

RECEIVED BY SUFFOLK ON 06/01/07

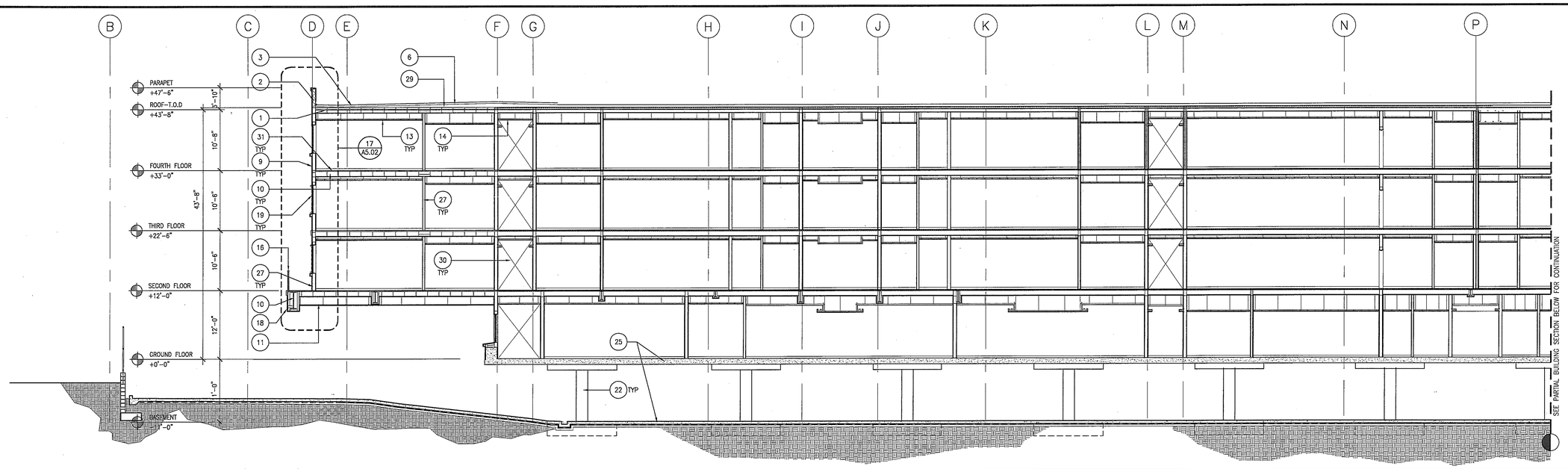

PARTIAL LONGITUDINAL BUILDING SECTION

Scale 1/8" = 1'-0" 3

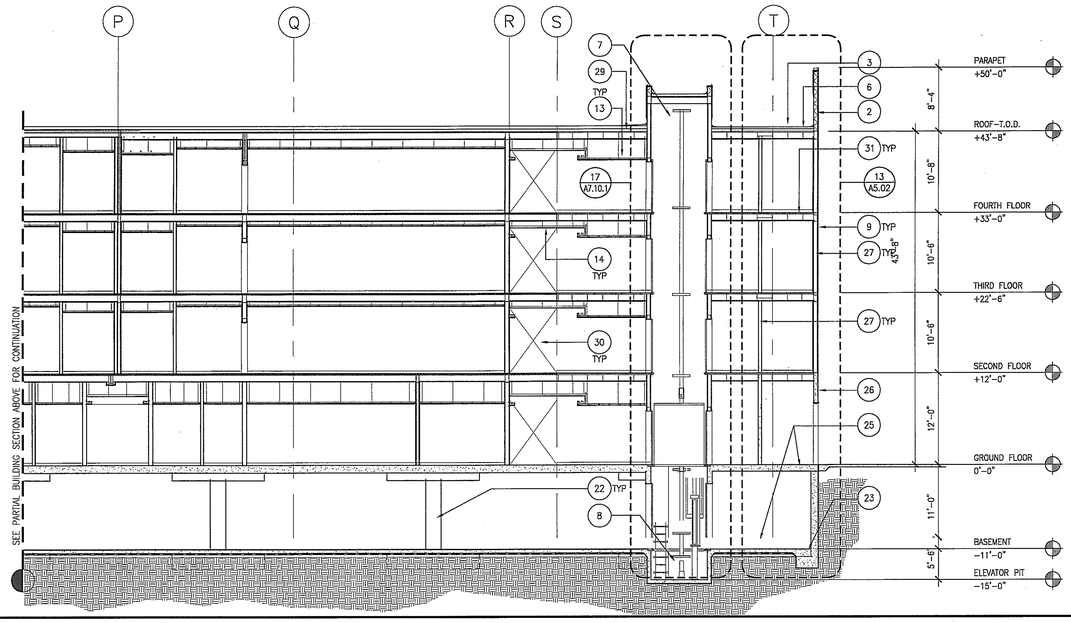

PARTIAL LONGITUDINAL BUILDING SECTION

Scale 1/8" = 1'-0" 2

1. ROOF FRAMING. SEE STRUCTURAL DRAWINGS
2. PARAPET WALL
3. CLASS A BUILT-UP ROOFING SYSTEM
4. ROOFTOP MECHANICAL EQUIPMENT. SEE MECHANICAL DRAWINGS
5. ROOF DRAIN
6. TAPERED INSULATION SLOPED TO DRAIN. SEE ROOF PLAN
7. ELEVATOR PENTHOUSE
8. ELEVATOR PIT
9. 7/8" EXTERIOR PLASTER OVER METAL LATH OVER 2 LAYERS OF BUILDING PAPER OVER 1/2" GYP. BD SHEATHING
10. FLOOR FRAMING. SEE STRUCTURAL DRAWINGS
11. PLASTER SOFFIT
12. SLIDING BALCONY DOOR PER DOOR SCHEDULE
13. 5/8" SUSPENDED GYP. BD CEILING SYSTEM. SEE REFLECTED CEILING PLAN
14. SUSPENDED ACOUSTICAL CEILING SYSTEM. SEE REFLECTED CEILING PLAN
15. SUSPENDED WOOD SLAT CEILING SYSTEM. SEE REFLECTED CEILING PLAN
16. PREFABRICATED PRE-PAINTED STEEL GUARDRAIL AT BALCONY
17. JERUSALEM STONE VENEER
18. BRICK VENEER
19. WINDOW PER WINDOW SCHEDULE
20. ENTRY DOOR PER DOOR SCHEDULE
21. CONCRETE DROP PANEL. SEE STRUCTURAL DRAWINGS
22. CONCRETE COLUMN BEYOND. SEE STRUCTURAL DRAWINGS
23. CONCRETE FOOTING. SEE STRUCTURAL DRAWINGS
25. CONCRETE SLAB. SEE STRUCTURAL DRAWINGS
26. CONCRETE WALL. SEE STRUCTIRAL DRAWINGS
27. METAL STUD WALL
28. METAL STUD SOFFIT FRAMING
29. STEEL ROOF DECK. SEE STRUCTURAL DRAWINGS
30. CORRIDOR OPENING
31. LEVELROCK OVER STEEL DECK. SEE STRUCTURAL DRAWINGS

Keynotes — Scale 5

DATUM ELEVATIONS LEGEND

T.O.S. = TOP OF STRUCTURAL STEEL
T.O.D. = TOP OF METAL DECKING
T.O.P. = TOP OF PARAPET
T.O.F. = TOP OF FINISH FLOOR
T.O.R. = TOP OF FINISH ROOFING
H.P. = HIGH POINT
L.P. = LOW POINT

GENERAL NOTES:

1. CONTRACTOR TO PROVIDE SAMPLE COLOR FINISHES OF PLASTER TO ARCHITECTS SPECIFIED, PRIOR TO APPLICATION OF PLASTER.

FIRE SAFING NOTES:

1. FIRE SAFING NOTE:
FORMING MATERIAL: MIN. 4.0 pcf MINERAL WOOL BATT INSULATION INSTALLED IN LINEAR GAP IN BETWEEN EXTERIOR METAL STUDS AT EVERY FLOOR LEVEL AS PERMANENT ASSAMBLY. MATERIAL TO BE CUT TO A 4 ¾" DEPTH AND STACKED TO A THIKNESS WHICH IS AT LEAST 25 % GREATER THAN THE WIDTH OF THE LINEAR GAP. THE MATERIAL IS COMPRESSED AND INSERTED CUT-EDGE FIRST INTO THE LINEAR GAP AND RECESSED FROM TOP SURFACE OF FLOOR TO ACCOMODATE THE DESIRED THIKNESS OF FILL MATERIAL.
FILL: MIN. ¾" THICKNESS OF FILL MATERIAL APPLIED WITH THE JOINT, FLUSH WITH TOP SURFACE OF FLOOR

Sections General Notes — Scale 1

WWC OT
Widom Wein Cohen O'Leary Terasawa
3130 Wilshire Boulevard
Sixth Floor
Santa Monica, California 90403
T (310) 828-0040
F (310) 453-9432
www.wwcot.com
Inland Empire
Palm Springs
Moorpark
Shanghai, China

RECEIVED
10:08 am, Aug 14, 2008
FRAMEMAX

Building Department Submittal: June 1, 2007
Issued For Bid:
Issued For Construction:

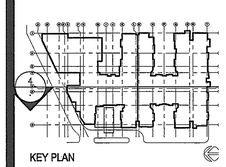

KEY PLAN

Project:
Jewish Home for The Aging
FOUNTAINVIEW AT EISENBERG VILLAGE
6440 Wilbur Ave
Reseda, CA. 91335

JEWISH HOME FOR THE AGING
18855 Victory Blvd.
Reseda, CA 91335
Project Number: 04206.00

Longitudinal Building Section

Date: 04/05/2007
Drawn By:
Checked By:

A4.03
Sheet No.

File Path & Name: F:\PROJECTS\04206.00\A-CD\SHEETS\A4.03.DWG
© WWCOT 2006 May 28, 2007 - 03:43 pm

RECEIVED BY SUFFOLK ON 06/01/07

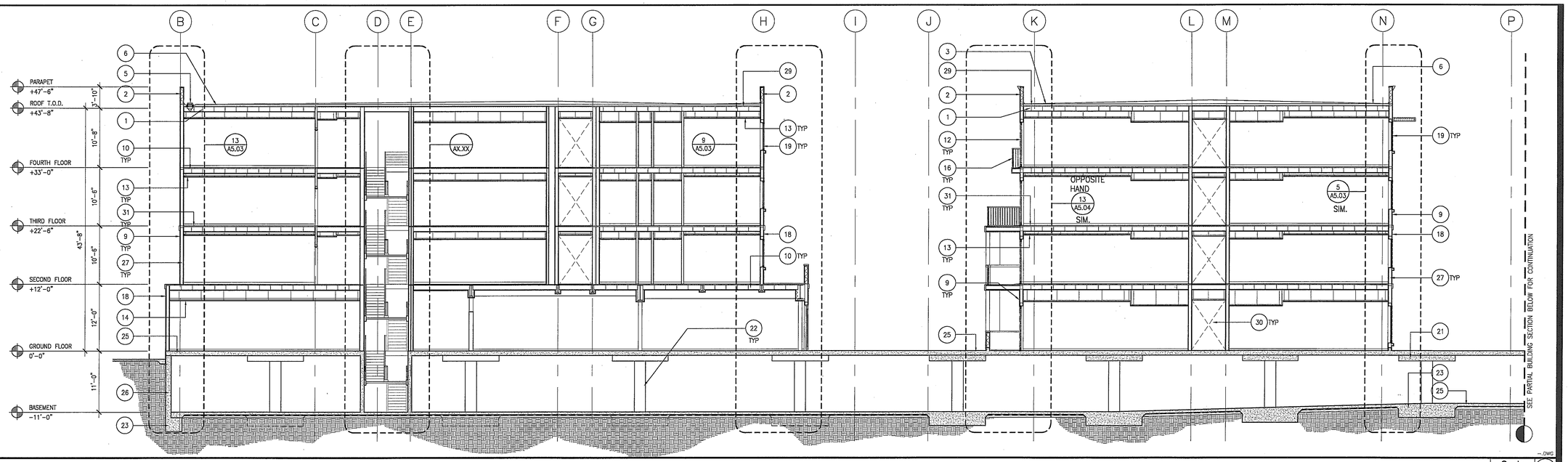

PARTIAL BUILDING SECTION

Scale 1/8" = 1'-0" 3

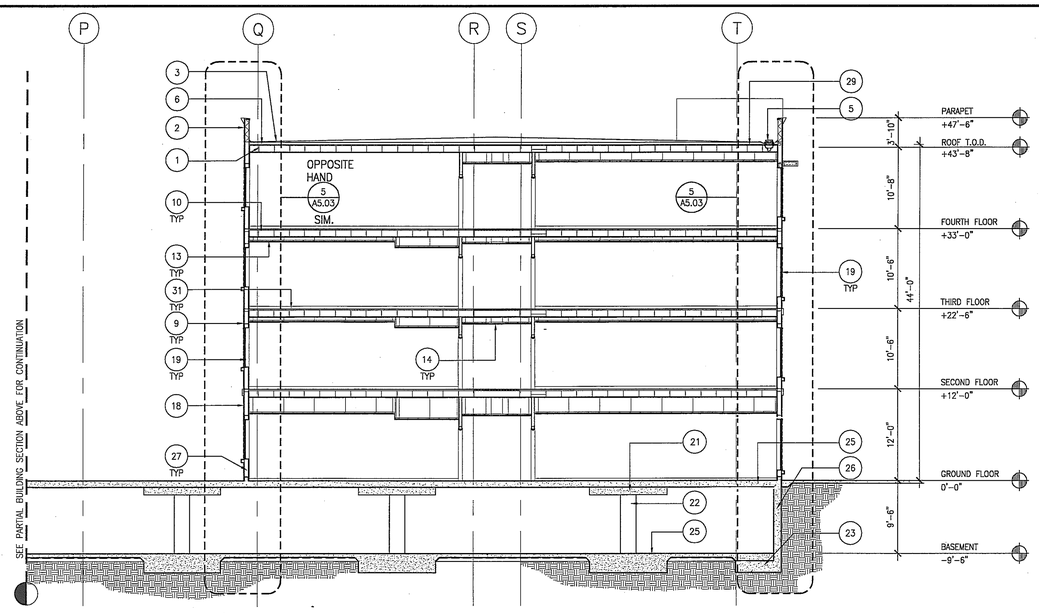

PARTIAL BUILDING SECTION

Scale 1/8" = 1'-0" 2

1. ROOF FRAMING. SEE STRUCTURAL DRAWINGS
2. PARAPET WALL
3. CLASS A BUILT-UP ROOFING SYSTEM
4. ROOFTOP MECHANICAL EQUIPMENT. SEE MECHANICAL DRAWINGS
5. ROOF DRAIN
6. TAPERED INSULATION SLOPED TO DRAIN. SEE ROOF PLAN
7. ELEVATOR PENTHOUSE
8. ELEVATOR PIT
9. 7/8" EXTERIOR PLASTER OVER METAL LATH OVER 2 LAYERS OF BUILDING PAPER OVER 1/2" GYP. BD SHEATHING
10. FLOOR FRAMING. SEE STRUCTURAL DRAWINGS
11. PLASTER SOFFIT
12. SLIDING BALCONY DOOR PER DOOR SCHEDULE
13. 5/8" SUSPENDED GYP. BD CEILING SYSTEM. SEE REFLECTED CEILING PLAN
14. SUSPENDED ACOUSTICAL CEILING SYSTEM. SEE REFLECTED CEILING PLAN
15. SUSPENDED WOOD SLAT CEILING SYSTEM. SEE REFLECTED CEILING PLAN
16. PREFABRICATED PRE-PAINTED STEEL GUARDRAIL AT BALCONY
17. JERUSALEM STONE VENEER
18. BRICK VENEER
19. WINDOW PER WINDOW SCHEDULE
20. ENTRY DOOR PER DOOR SCHEDULE
21. CONCRETE DROP PANEL. SEE STRUCTURAL DRAWINGS
22. CONCRETE COLUMN BEYOND. SEE STRUCTURAL DRAWINGS
23. CONCRETE FOOTING. SEE STRUCTURAL DRAWINGS
25. CONCRETE SLAB. SEE STRUCTURAL DRAWINGS
26. CONCRETE WALL. SEE STRUCTIRAL DRAWINGS
27. METAL STUD WALL
28. METAL STUD SOFFIT FRAMING
29. STEEL ROOF DECK. SEE STRUCTURAL DRAWINGS
30. CORRIDOR OPENING
31. LEVELROCK OVER STEEL DECK. SEE STRUCTURAL DRAWINGS

Keynotes

Scale 5

DATUM ELEVATIONS LEGEND

T.O.S. = TOP OF STRUCTURAL STEEL
T.O.D. = TOP OF METAL DECKING
T.O.P. = TOP OF PARAPET
T.O.F. = TOP OF FINISH FLOOR
T.O.R. = TOP OF FINISH ROOFING
H.P. = HIGH POINT
L.P. = LOW POINT

GENERAL NOTES:

1. CONTRACTOR TO PROVIDE SAMPLE COLOR FINISHES OF PLASTER TO ARCHITECTS SPECIFIED, PRIOR TO APPLICATION OF PLASTER.

FIRE SAFING NOTES:

1. FIRE SAFING NOTE:
FORMING MATERIAL: MIN. 4.0 pcf MINERAL WOOL BATT INSULATION INSTALLED IN LINEAR GAP IN BETWEEN EXTERIOR METAL STUDS AT EVERY FLOOR LEVEL AS PERMANENT ASSAMBLY. MATERIAL TO BE CUT TO A 4 ¼" DEPTH AND STACKED TO A THIKNESS WHICH IS AT LEAST 25 % GREATER THAN THE WIDTH OF THE LINEAR GAP. THE MATERIAL IS COMPRESSED AND INSERTED CUT-EDGE FIRST INTO THE LINEAR GAP AND RECESSED FROM TOP SURFACE OF FLOOR TO ACCOMODATE THE DESIRED THIKNESS OF FILL MATERIAL.
FILL: MIN. ¾" THICKNESS OF FILL MATERIAL APPLIED WITH THE JOINT, FLUSH WITH TOP SURFACE OF FLOOR

Sections General Notes

Scale 1

File Path & Name: F:\PROJECTS\04206-00\A-CD\SHEETS\A4.04.DWG
© WWCOT 2006 May 28, 2007 - 03:43 pm

WWC OT
Widom Wein Cohen O'Leary Terasawa

3130 Wilshire Boulevard
Sixth Floor
Santa Monica, California 90403
T (310) 828-0040
F (310) 453-9432
www.wwcot.com

Inland Empire
Palm Springs
Moorpark
Shanghai, China

RECEIVED
10:08 am, Aug 14, 2008
FRAMEMAX

Building Department Submittal: June 1, 2007
Issued For Bid:
Issued For Construction:

KEY PLAN

Project:
Jewish Home for The Aging
FOUNTAINVIEW AT EISENBERG VILLAGE
6440 Wilbur Ave
Reseda, CA. 91335

JEWISH HOME
JEWISH HOME FOR THE AGING
18855 Victory Blvd.
Reseda, CA 91335
Project Number: 04206.00

Building Sections

Date: 04/05/2007
Drawn By:
Checked By:

A4.04
Sheet No.

RECEIVED BY SUFFOLK ON 06/01/07

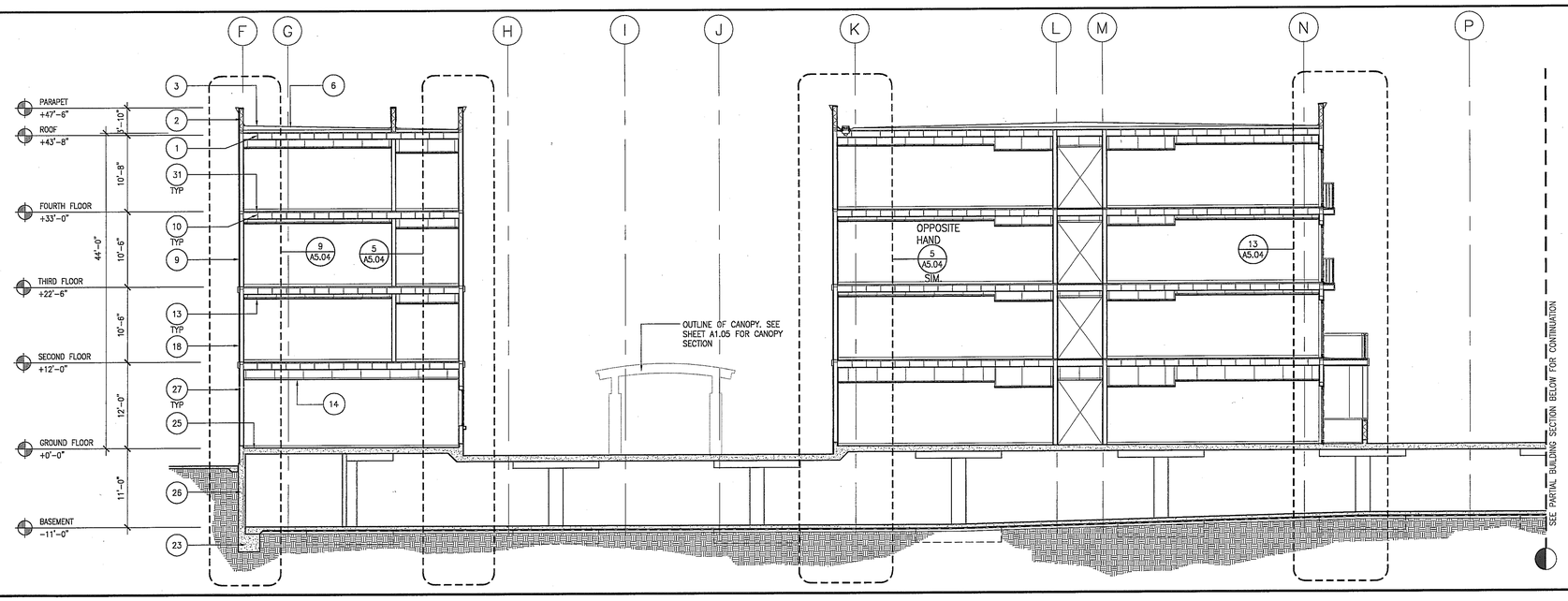

PARTIAL BUILDING SECTION

Scale 1/8" = 1'-0" 3

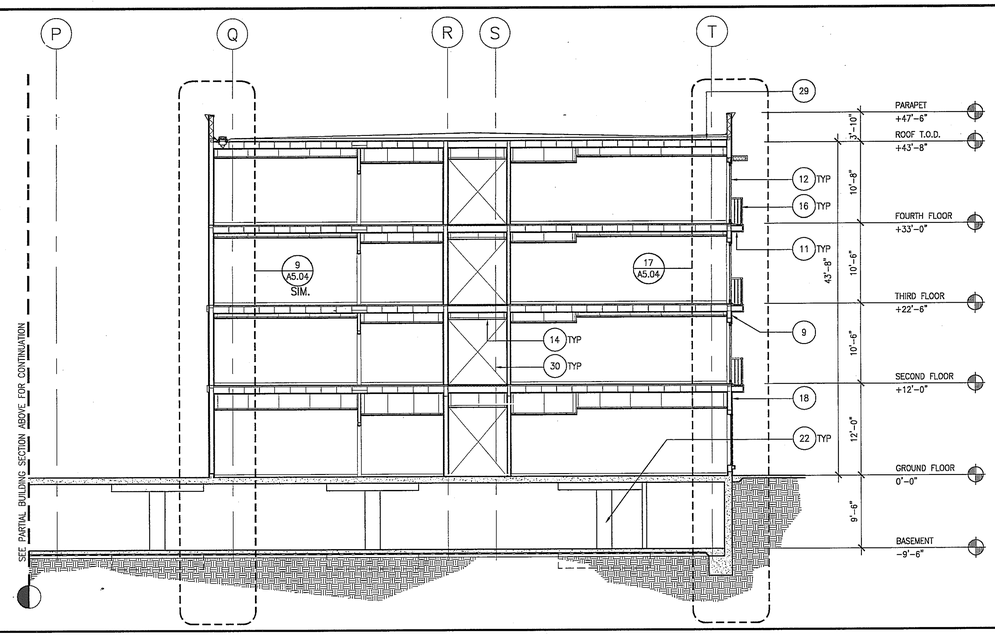

PARTIAL BUILDING SECTION

Scale 1/8" = 1'-0" 2

1. ROOF FRAMING. SEE STRUCTURAL DRAWINGS
2. PARAPET WALL
3. CLASS A BUILT-UP ROOFING SYSTEM
4. ROOFTOP MECHANICAL EQUIPMENT. SEE MECHANICAL DRAWINGS
5. ROOF DRAIN
6. TAPERED INSULATION SLOPED TO DRAIN. SEE ROOF PLAN
7. ELEVATOR PENTHOUSE
8. ELEVATOR PIT
9. 7/8" EXTERIOR PLASTER OVER METAL LATH OVER 2 LAYERS OF BUILDING PAPER OVER 1/2" GYP. BD SHEATHING
10. FLOOR FRAMING. SEE STRUCTURAL DRAWINGS
11. PLASTER SOFFIT
12. SLIDING BALCONY DOOR PER DOOR SCHEDULE
13. 5/8" SUSPENDED GYP. BD CEILING SYSTEM. SEE REFLECTED CEILING PLAN
14. SUSPENDED ACOUSTICAL CEILING SYSTEM. SEE REFLECTED CEILING PLAN
15. SUSPENDED WOOD SLAT CEILING SYSTEM. SEE REFLECTED CEILING PLAN
16. PREFABRICATED PRE-PAINTED STEEL GUARDRAIL AT BALCONY
17. JERUSALEM STONE VENEER
18. BRICK VENEER
19. WINDOW PER WINDOW SCHEDULE
20. ENTRY DOOR PER DOOR SCHEDULE
21. CONCRETE DROP PANEL. SEE STRUCTURAL DRAWINGS
22. CONCRETE COLUMN BEYOND. SEE STRUCTURAL DRAWINGS
23. CONCRETE FOOTING. SEE STRUCTURAL DRAWINGS
25. CONCRETE SLAB. SEE STRUCTURAL DRAWINGS
26. CONCRETE WALL. SEE STRUCTIRAL DRAWINGS
27. METAL STUD WALL
28. METAL STUD SOFFIT FRAMING
29. STEEL ROOF DECK. SEE STRUCTURAL DRAWINGS
30. CORRIDOR OPENING
31. LEVELROCK OVER STEEL DECK. SEE STRUCTURAL DRAWINGS

Keynotes

Scale 5

DATUM ELEVATIONS LEGEND

T.O.S. = TOP OF STRUCTURAL STEEL
T.O.D. = TOP OF METAL DECKING
T.O.P. = TOP OF PARAPET
T.O.F. = TOP OF FINISH FLOOR
T.O.R. = TOP OF FINISH ROOFING
H.P. = HIGH POINT
L.P. = LOW POINT

GENERAL NOTES:

1. CONTRACTOR TO PROVIDE SAMPLE COLOR FINISHES OF PLASTER TO ARCHITECTS SPECIFIED, PRIOR TO APPLICATION OF PLASTER.

FIRE SAFING NOTES:

1. FIRE SAFING NOTE:
FORMING MATERIAL: MIN. 4.0 pcf MINERAL WOOL BATT INSULATION INSTALLED IN LINEAR GAP IN BETWEEN EXTERIOR METAL STUDS AT EVERY FLOOR LEVEL AS PERMANENT ASSAMBLY. MATERIAL TO BE CUT TO A 4 ¼" DEPTH AND STACKED TO A THIKNESS WHICH IS AT LEAST 25 % GREATER THAN THE WIDTH OF THE LINEAR GAP. THE MATERIAL IS COMPRESSED AND INSERTED CUT-EDGE FIRST INTO THE LINEAR GAP AND RECESSED FROM TOP SURFACE OF FLOOR TO ACCOMODATE THE DESIRED THIKNESS OF FILL MATERIAL.
FILL: MIN. ½" THICKNESS OF FILL MATERIAL APPLIED WITH THE JOINT, FLUSH WITH TOP SURFACE OF FLOOR

Sections General Notes

Scale 1

File Path & Name: F:\PROJECTS\04206-00\A-CD\SHEETS\A4.05.DWG
© WWCOT 2006 May 28, 2007 - 03:44 pm

WWC OT
Widom Wein Cohen O'Leary Terasawa

3130 Wilshire Boulevard
Sixth Floor
Santa Monica, California 90403
T (310) 828-0040
F (310) 453-0432
www.wwcot.com

Inland Empire
Palm Springs
Moorpark
Shanghai, China

RECEIVED
10:08 am, Aug 14, 2008
FRAMEMAX

Building Department Submittal: June 1, 2007
Issued For Bid:
Issued For Construction:

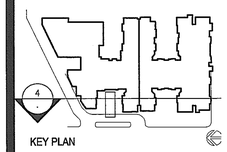

KEY PLAN

Project:
Jewish Home for The Aging
FOUNTAINVIEW
AT EISENBERG VILLAGE
6440 Wilbur Ave
Reseda, CA. 91335

JEWISH HOME
FOR THE AGING
18855 Victory Blvd.
Reseda, CA 91335

Project Number: 04206.00

Building Sections

Date: 04/05/2007
Drawn By:
Checked By:

A4.05
Sheet No.

RECEIVED BY SUFFOLK ON 06/01/07

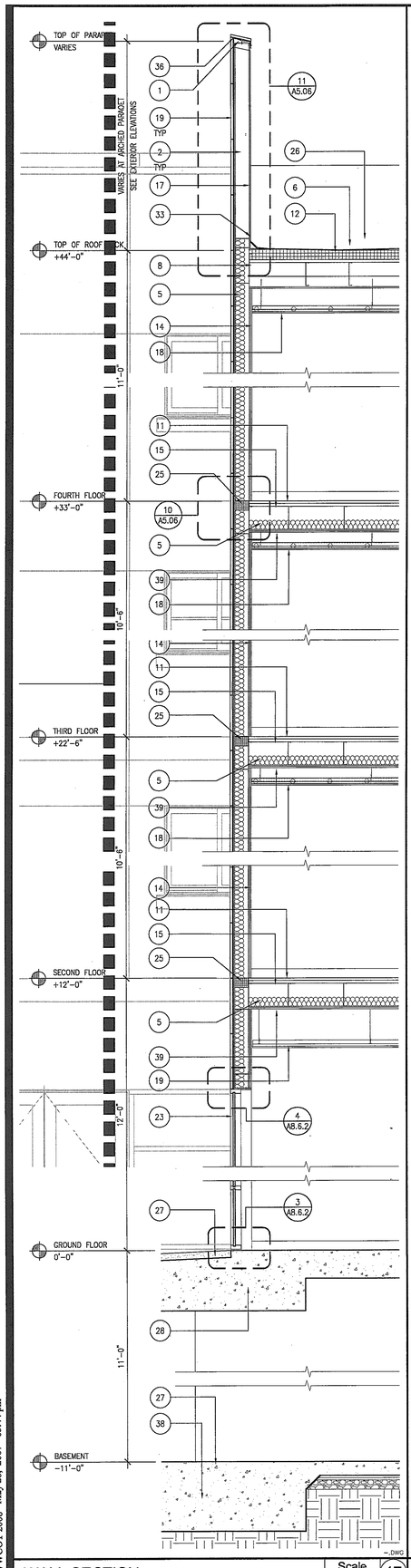

WALL SECTION — Scale 1/2"=1'-0" — 17

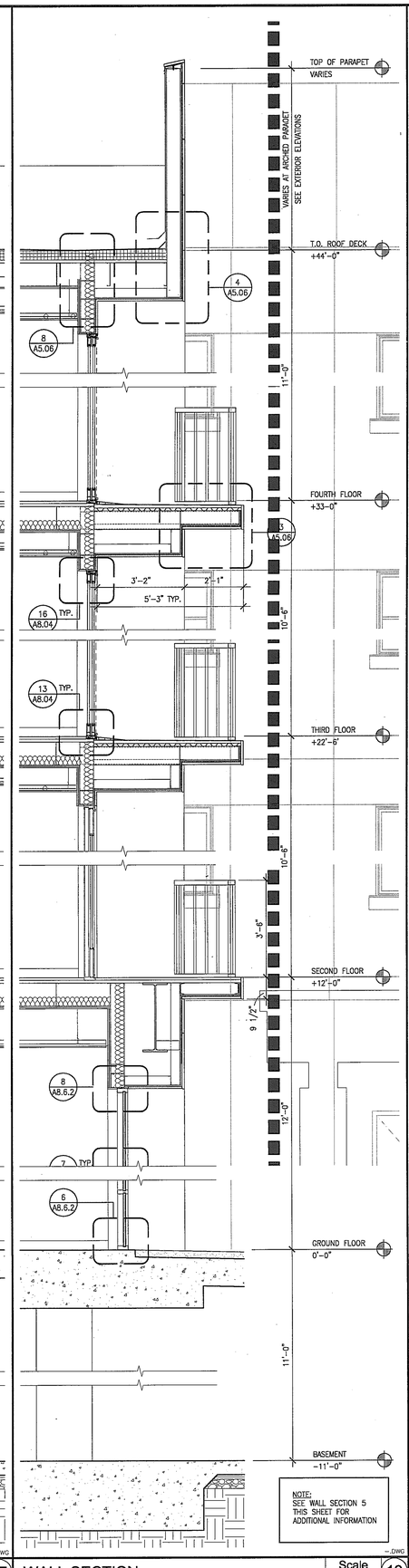

WALL SECTION — Scale 1/2"=1'-0" — 13

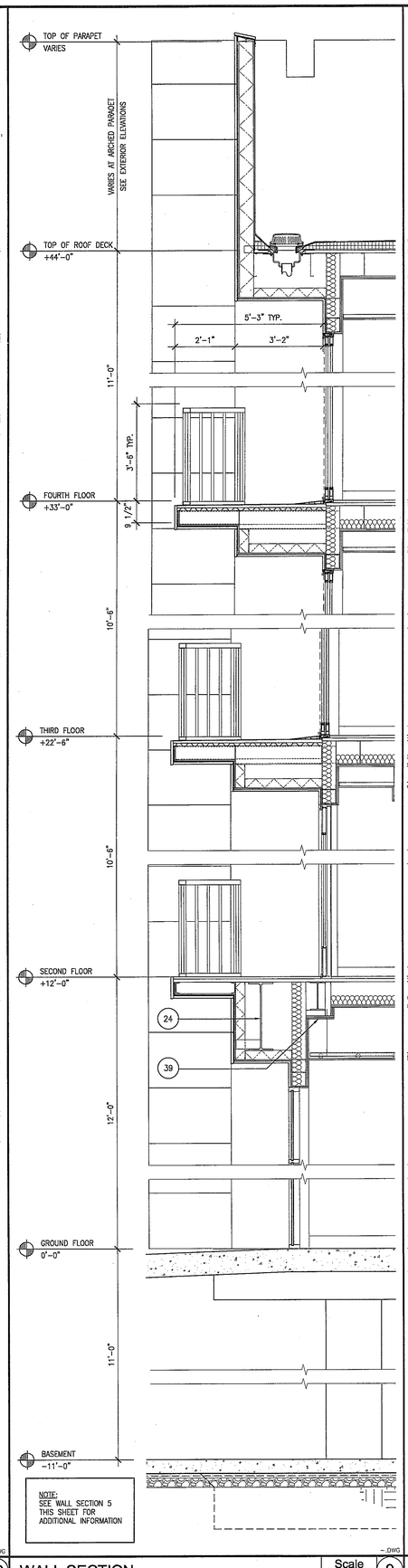

WALL SECTION — Scale 1/2"=1'-0" — 9

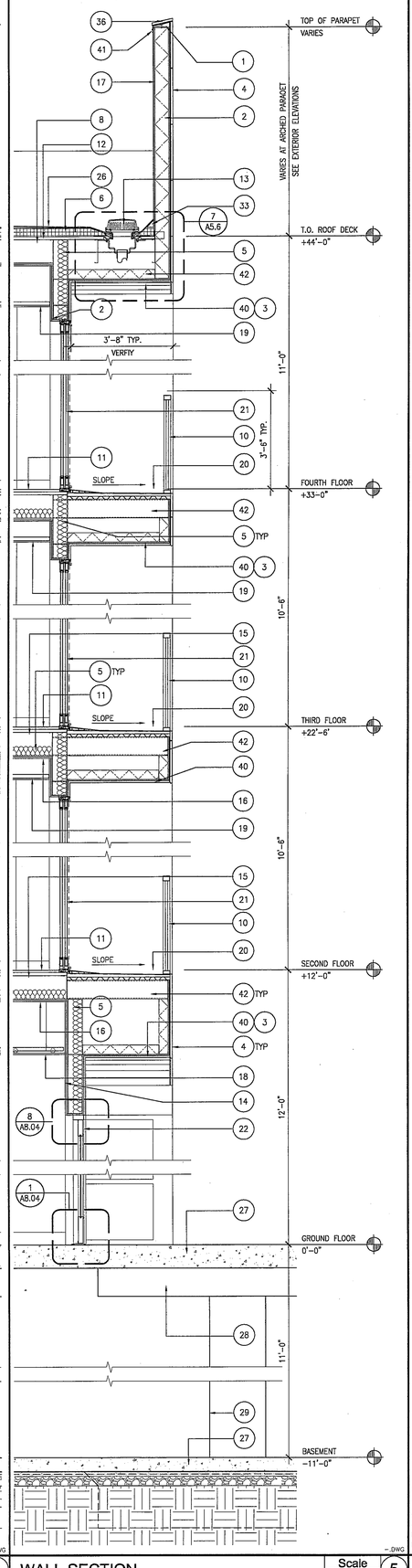

WALL SECTION — Scale 1/2"=1'-0" — 5

1 2X P.T. SHAPED WOOD NAILER ATTACHED TO METAL STUD W/ SELF-TAPPING #14 GALV. COUNTERSUNK S.M.S. @ 4'-0" O.C.

2 6" X 18 GA. METAL STUDS @ 16" O.C.

3 7/8" EXTERIOR PLASTER OVER METAL LATH, (2) LAYERS D GRADE BUILDING PAPER AND 1/2" DENS-GLASS GOLD EXTERIOR GYP. BD. SHEATHING

4 1" THICK JERUSALEM STONE VENEER OVER THIN SET MORTAR, WATERPROOFING MEMBRANE, LATICRETE MORTAR BED, METAL LATH, (2) LAYERS D GRADE BUILDING PAPER AND 1/2" DENS-GLASS GOLD EXTERIOR GYP. BD. SHEATHING

5 R13 FIBERGLASS BATT INSULATION

6 TAPERED RIGID INSULATION MIN 4" THICK AT LOW POINT. SLOPE UP 1/4" PER FT. TO DRAIN

7 5/8" THICK THIN VENEER BRICK OVER PORTLAND CEMENT MORTAR, METAL LATH, (2) LAYERS D GRADE BUILDING PAPER AND 1/2" DENS-GLASS GOLD EXTERIOR GYP. BD. SHEATHING

8 COLD FORMED STEEL CHANNEL ROOF FRAMING. SEE STRUCT. DWGS.

9 NAIL-ON VINYL WINDOW. SEE WINDOW SCHEDULE

10 PREFABRICATED PRE-PAINTED STEEL GUARDRAIL

11 1" LEVELROCK OVER METAL DECK. SEE STRUCTURAL DWGS.

12 METAL ROOF DECK. SEE STRUCTURAL DWGS.

13 ROOF DRAIN AND OVERFLOW BEYOND

14 (2) LAYERS 5/8" TYPE 'X' GYP. BD.

15 COLD FORMED STEEL CHANNEL FLOOR FRAMING. SEE STRUCTURAL DWGS.

16 (1) LAYER 5/8" TYPE 'C' GYP. BD. OVER 1/2" RESILIENT CHANNELS SPACED 12" O.C. ATTACHED TO FLOOR FRAMING ABOVE

17 1/2" DENS-GLASS GOLD EXTERIOR GYP. BD. SHEATHING

18 SUSPENDED 5/8" GYP. BD. CEILING SYSTEM ATTACHED TO STRUCTURE ABOVE. SEE REFLECTED CEILING PLANS

19 SUSPENDED ACOUSTICAL CEILING SYSTEM ATTACHED TO STRUCTURE ABOVE. SEE REFLECTED CEILING PLANS

20 DEX-O-TEX WATERPROOFING OVER BALCONY DECK. SLOPE BALCONY TO SHEET DRAIN

21 SLIDING VINYL BALCONY DOOR. SEE DOOR SCHEDULE

22 ALUM. STOREFRONT DOOR. SEE DOOR SCHEDULE

23 ALUM. STOREFRONT WINDOW SYSTEM. SEE WINDOW/DOOR SCHEDULE

24 STEEL FRAMING. SEE STRUCTURAL DWGS.

25 COMPRESSIBLE FIRE SAFING AT EACH FLOOR EDGE, TYP

26 CLASS A MODIFIED BITUMEN BUILT-UP ROOF SYSTEM

27 CONCRETE SLAB. SEE STRUCTURAL DRAWINGS

28 CONCRETE DROP PANEL. SEE STRUCTURAL DRAWINGS

29 CONCRETE COLUMN BEYOND. SEE STRUCTURAL DRAWINGS

30 JERUSALEM STONE BANDING

31 JERUSALEM STONE WINDOW SILL

32 GALV. STUCCO REGLET AND COUNTERFLASHING MIN 8" ABOVE ROOF INSULATION

33 3" FIBER CANT STRIP, TYP AT PARAPET WALL

34 CRICKET PER ROOF PLAN

35 P.T. SHAPED 2X BLOCKING

36 JERUSALEM STONE COPING

37 BASE FLASHING OVER CANT STRIP

38 CONCRETE FOOTING. SEE STRUCTURAL DRAWINGS

39 (2) LAYERS 5/8" TYPE 'X' GYP. BD. OVER 1 1/2" FURRING CHANNEL

40 EXTERIOR PLASTER SOFFIT. SEE REFLECTED CEILING PLANS

41 GALV. REGLET AND COUNTERFLASHING. CARRY FLASHING UP UNDER COPING

42 4" X 20 GA. METAL STUDS @ 16" O.C.

43 GALV. FOUNDATION WEEP SCREED. RUN DEX-O-TEX UP UNDER WEEP SCREED

44 METAL TRACK BACKING

45 CONCRETE FOUNDATION WALL. SEE STRUCTURAL DRAWINGS

46 PRECAST CONCRETE COPING

47 GALV. STEEL COPING. PAINT

48 GALV. STEEL LOUVERED SUNSHADE. PAINT

49 6" H CONCRETE CURB

FIRE SAFING NOTES:
FORMING MATERIAL: MIN. 4.0 pcf MINERAL WOOL BATT INSULATION INSTALLED IN LINEAR GAP IN BETWEEN EXTERIOR METAL STUDS AT EVERY FLOOR LEVEL AS PERMANENT ASSAMBLY. MATERIAL TO BE CUT TO A 4 ¼" DEPTH AND STACKED TO A THIKNESS WHICH IS AT LEAST 25 % GREATER THAN THE WIDTH OF THE LINEAR GAP. THE MATERIAL IS COMPRESSED AND INSERTED CUT-EDGE FIRST INTO THE LINEAR GAP AND RECESSED FROM TOP SURFACE OF FLOOR TO ACCOMODATE THE DESIRED THIKNESS OF FILL MATERIAL.
FILL: MIN. ¼" THICKNESS OF FILL MATERIAL APPLIED WITH THE JOINT, FLUSH WITH TOP SURFACE OF FLOOR

Key Notes — Scale N.T.S. — 1

WWC OT
Widom Wein Cohen O'Leary Terasawa

3130 Wilshire Boulevard
Sixth Floor
Santa Monica, California 90403
T (310) 826-0040
F (310) 453-9432
www.wwcot.com

Inland Empire
Palm Springs
Moorpark
Shanghai, China

RECEIVED
10:08 am, Aug 14, 2008
FRAMEMAX

Building Department Submittal: June 1, 2007
Issued For Bid: _____
Issued For Construction: _____

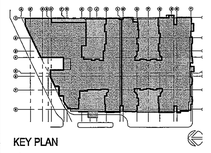

KEY PLAN

Project:
Jewish Home for The Aging
FOUNTAINVIEW AT EISENBERG VILLAGE
6440 Wilbur Ave
Reseda, CA. 91335

BPB JEWISH HOME
JEWISH HOME FOR THE AGING
18855 Victory Blvd.
Reseda, CA 91335
Project Number: 04206.00

Exterior Wall Sections

Date: 04/05/2007
Drawn By: _____
Checked By: _____

A5.01
Sheet No.

File Path & Name: F:\PROJECTS\04206.00\A-CD\SHEETS\A5.01.DWG
© WWCOT 2006 May 28, 2007 - 03:44 pm

RECEIVED BY SUFFOLK ON 06/01/07

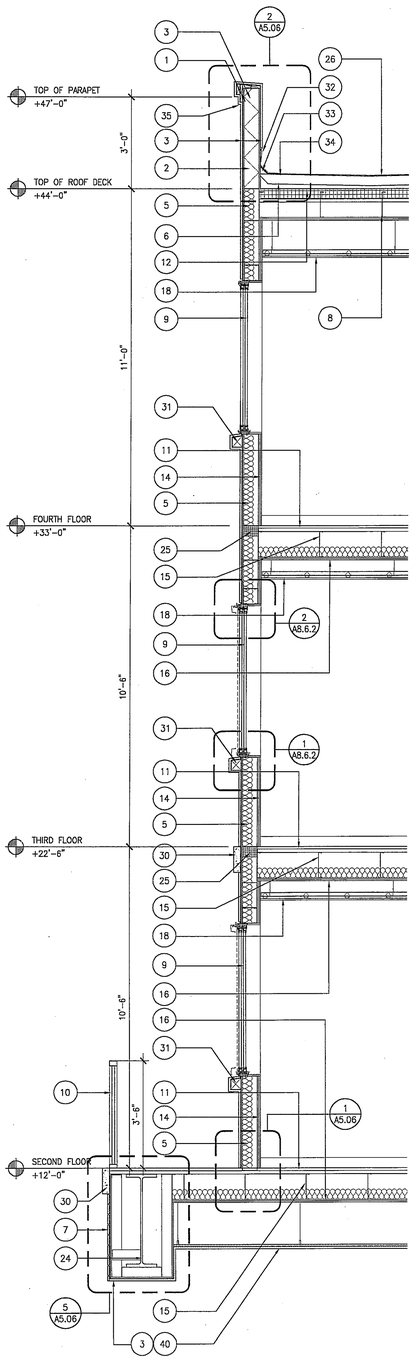

WALL SECTION — Scale 1/2"=1'-0" — 17

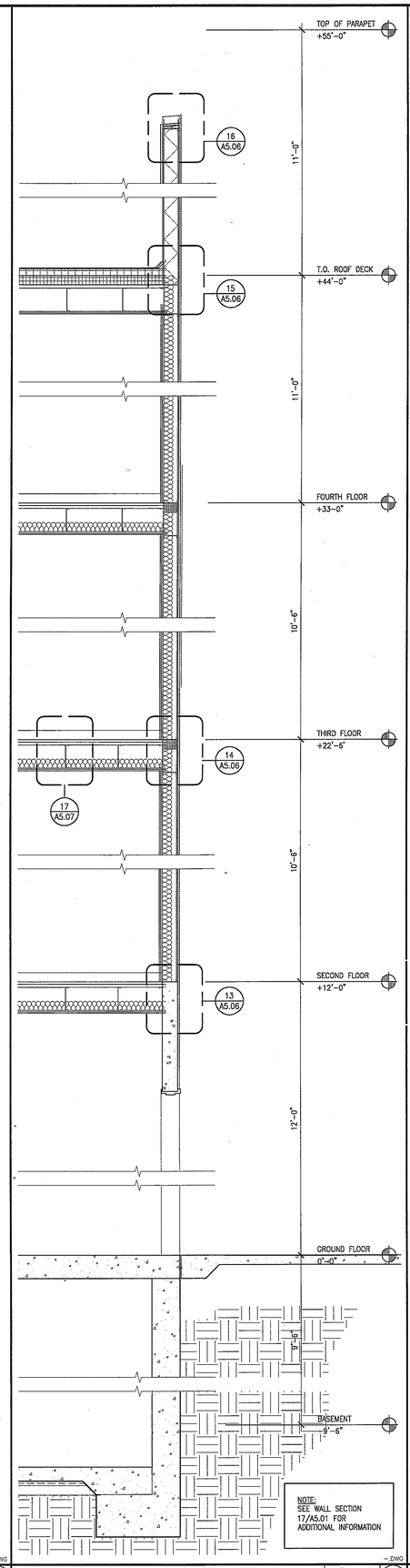

WALL SECTION — Scale 1/2"=1'-0" — 13

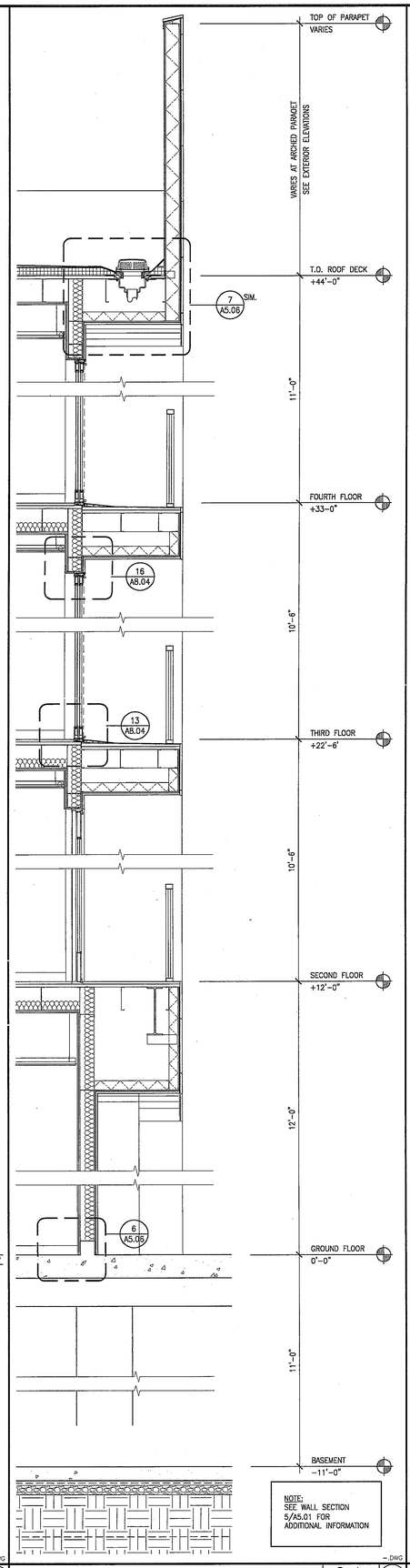

WALL SECTION — Scale 1/2"=1'-0" — 9

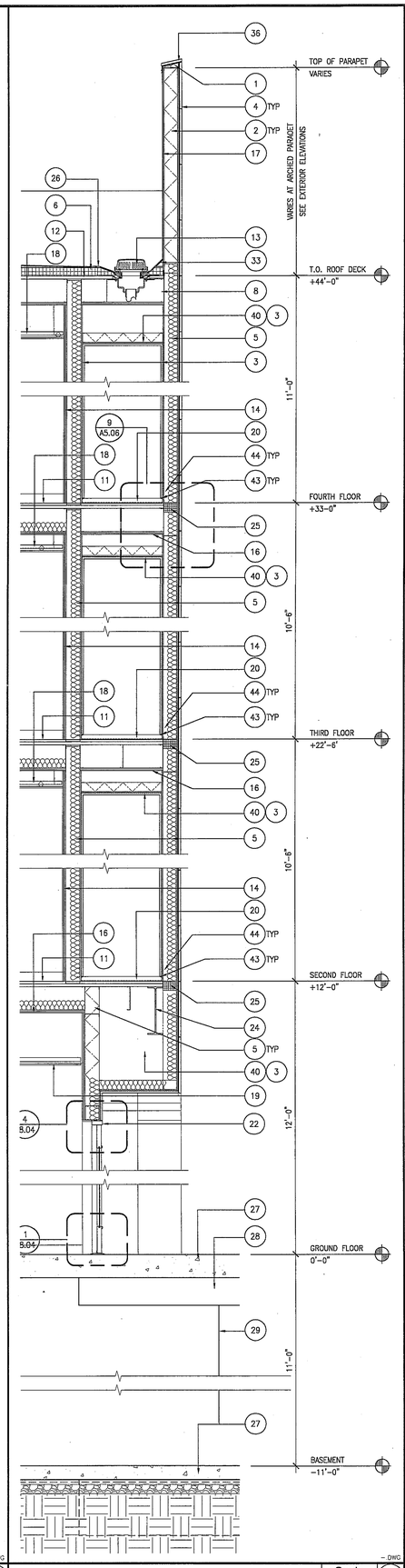

WALL SECTION — Scale 1/2"=1'-0" — 5

1. 2X P.T. SHAPED WOOD NAILER ATTACHED TO METAL STUD W/ SELF-TAPPING #14 GALV. COUNTERSUNK S.M.S. @ 4'-0" O.C.
2. 6" X 18 GA. METAL STUDS @ 16" O.C.
3. 7/8" EXTERIOR PLASTER OVER METAL LATH, (2) LAYERS D GRADE BUILDING PAPER AND 1/2" DENS-GLASS GOLD EXTERIOR GYP. BD. SHEATHING
4. 1" THICK JERUSALEM STONE VENEER OVER THIN SET MORTAR, WATERPROOFING MEMBRANE, LATICRETE MORTAR BED, METAL LATH, (2) LAYERS D GRADE BUILDING PAPER AND 1/2" DENS-GLASS GOLD EXTERIOR GYP. BD. SHEATHING
5. R13 FIBERGLASS BATT INSULATION
6. TAPERED RIGID INSULATION MIN 4" THICK AT LOW POINT. SLOPE UP 1/4" PER FT. TO DRAIN
7. 5/8" THICK THIN VENEER BRICK OVER PORTLAND CEMENT MORTAR, METAL LATH, (2) LAYERS D GRADE BUILDING PAPER AND 1/2" DENS-GLASS GOLD EXTERIOR GYP. BD. SHEATHING
8. COLD FORMED STEEL CHANNEL ROOF FRAMING. SEE STRUCT. DWGS.
9. NAIL-ON VINYL WINDOW. SEE WINDOW SCHEDULE
10. PREFABRICATED PRE-PAINTED STEEL GUARDRAIL
11. 1" LEVELROCK OVER METAL DECK. SEE STRUCTURAL DWGS.
12. METAL ROOF DECK. SEE STRUCTURAL DWGS.
13. ROOF DRAIN AND OVERFLOW BEYOND
14. (2) LAYERS 5/8" TYPE 'X' GYP. BD.
15. COLD FORMED STEEL CHANNEL FLOOR FRAMING. SEE STRUCTURAL DWGS.
16. (1) LAYER 5/8" TYPE 'C' GYP. BD. OVER 1/2" RESILIENT CHANNELS SPACED 12" O.C. ATTACHED TO FLOOR FRAMING ABOVE
17. 1/2" DENS-GLASS GOLD EXTERIOR GYP. BD. SHEATHING
18. SUSPENDED 5/8" GYP. BD. CEILING SYSTEM ATTACHED TO STRUCTURE ABOVE. SEE REFLECTED CEILING PLANS
19. SUSPENDED ACOUSTICAL CEILING SYSTEM ATTACHED TO STRUCTURE ABOVE. SEE REFLECTED CEILING PLANS
20. DEX-O-TEX WATERPROOFING OVER BALCONY DECK. SLOPE BALCONY TO SHEET DRAIN
21. SLIDING VINYL BALCONY DOOR. SEE DOOR SCHEDULE
22. ALUM. STOREFRONT DOOR. SEE DOOR SCHEDULE
23. ALUM. STOREFRONT WINDOW SYSTEM. SEE WINDOW/DOOR SCHEDULE
24. STEEL FRAMING. SEE STRUCTURAL DWGS.
25. COMPRESSIBLE FIRE SAFING AT EACH FLOOR EDGE, TYP
26. CLASS A MODIFIED BITUMEN BUILT-UP ROOF SYSTEM
27. CONCRETE SLAB. SEE STRUCTURAL DRAWINGS
28. CONCRETE DROP PANEL. SEE STRUCTURAL DRAWINGS
29. CONCRETE COLUMN BEYOND. SEE STRUCTURAL DRAWINGS
30. JERUSALEM STONE BANDING
31. JERUSALEM STONE WINDOW SILL
32. GALV. STUCCO REGLET AND COUNTERFLASHING MIN 8" ABOVE ROOF INSULATION
33. 3" FIBER CANT STRIP, TYP AT PARAPET WALL
34. CRICKET PER ROOF PLAN
35. P.T. SHAPED 2X BLOCKING
36. JERUSALEM STONE COPING
37. BASE FLASHING OVER CANT STRIP
38. CONCRETE FOOTING. SEE STRUCTURAL DRAWINGS
39. (2) LAYERS 5/8" TYPE 'X' GYP. BD. OVER 1 1/2" FURRING CHANNEL
40. EXTERIOR PLASTER SOFFIT. SEE REFLECTED CEILING PLANS
41. GALV. REGLET AND COUNTERFLASHING. CARRY FLASHING UP UNDER COPING
42. 4" X 20 GA. METAL STUDS @ 16" O.C.
43. GALV. FOUNDATION WEEP SCREED. RUN DEX-O-TEX UP UNDER WEEP SCREED
44. METAL TRACK BACKING
45. CONCRETE FOUNDATION WALL. SEE STRUCTURAL DRAWINGS
46. PRECAST CONCRETE COPING
47. GALV. STEEL COPING. PAINT
48. GALV. STEEL LOUVERED SUNSHADE. PAINT
49. 6" H CONCRETE CURB

NOTE:
1. DETAILS ARE TYPICAL FOR LIKE CONDITIONS.
2. KEY NOTES ABOVE ARE ONLY APPLICABLE WHERE SHOWN ON THIS SHEET

FIRE SAFING NOTES:
FORMING MATERIAL: MIN. 4.0 pcf MINERAL WOOL BATT INSULATION INSTALLED IN LINEAR GAP IN BETWEEN EXTERIOR METAL STUDS AT EVERY FLOOR LEVEL AS PERMANENT ASSAMBLY. MATERIAL TO BE CUT TO A 4 ¼" DEPTH AND STACKED TO A THIKNESS WHICH IS AT LEAST 25 % GREATER THAN THE WIDTH OF THE LINEAR GAP. THE MATERIAL IS COMPRESSED AND INSERTED CUT-EDGE FIRST INTO THE LINEAR GAP AND RECESSED FROM TOP SURFACE OF FLOOR TO ACCOMODATE THE DESIRED THIKNESS OF FILL MATERIAL.
FILL: MIN. ¼" THICKNESS OF FILL MATERIAL APPLIED WITH THE JOINT, FLUSH WITH TOP SURFACE OF FLOOR

Key Notes — Scale N.T.S. — 1

WWC OT
Widom Wein Cohen O'Leary Terasawa

3130 Wilshire Boulevard
Sixth Floor
Santa Monica, California 90403
T (310) 828-0040
F (310) 453-9432
www.wwcot.com

Inland Empire
Palm Springs
Moorpark
Shanghai, China

RECEIVED
10:08 am, Aug 14, 2008
FRAMEMAX

Building Department Submittal: June 1, 2007
Issued For Bid:
Issued For Construction:

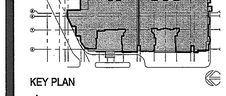

KEY PLAN

Project:
Jewish Home for The Aging
FOUNTAINVIEW AT EISENBERG VILLAGE
6440 Wilbur Ave
Reseda, CA. 91335

JEWISH HOME
JEWISH HOME FOR THE AGING
18855 Victory Blvd.
Reseda, CA 91335
Project Number: 04206.00

Exterior Wall Sections

Date: 04/05/2007
Drawn By:
Checked By:

A5.02
Sheet No.

File Path & Name: F:\PROJECTS\04206-00\A-CD\SHEETS\A5.02.DWG
© WWCOT 2006 May 28, 2007 - 03:45 pm

RECEIVED BY SUFFOLK ON 06/01/07

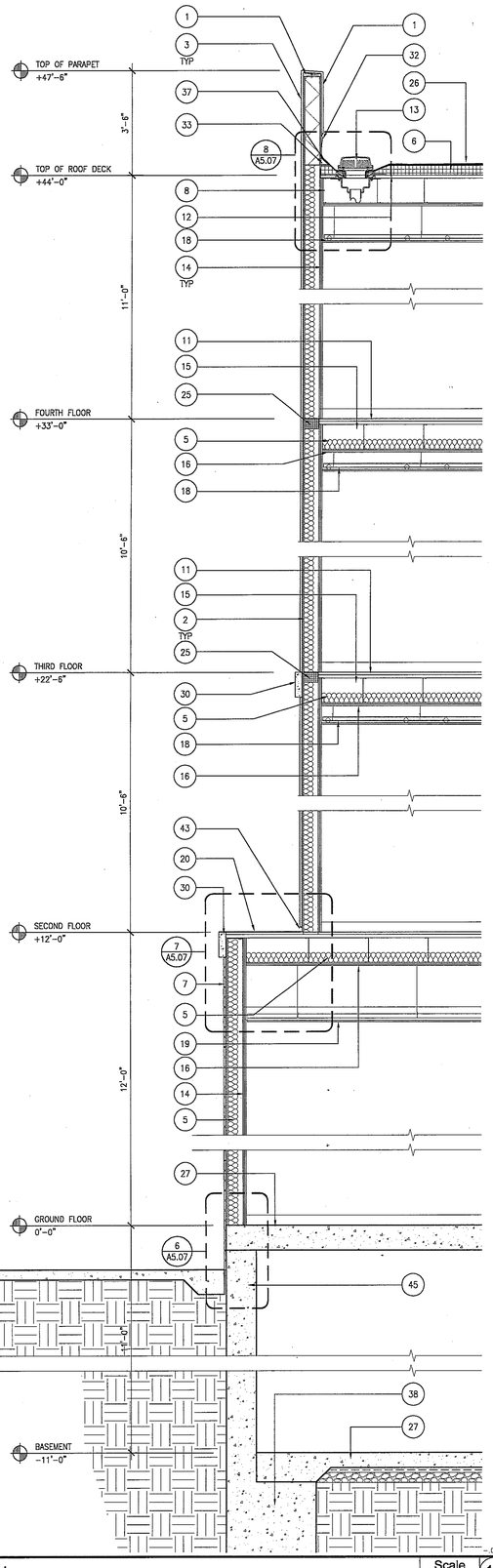

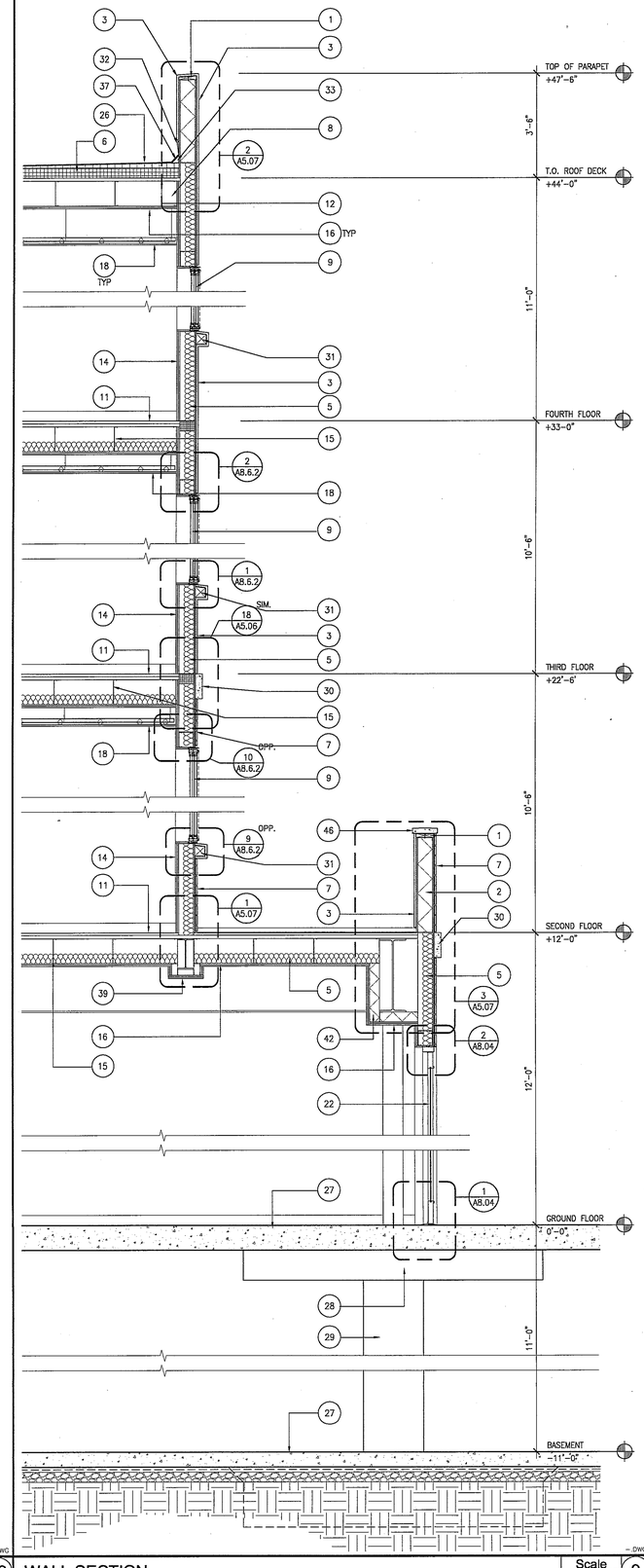

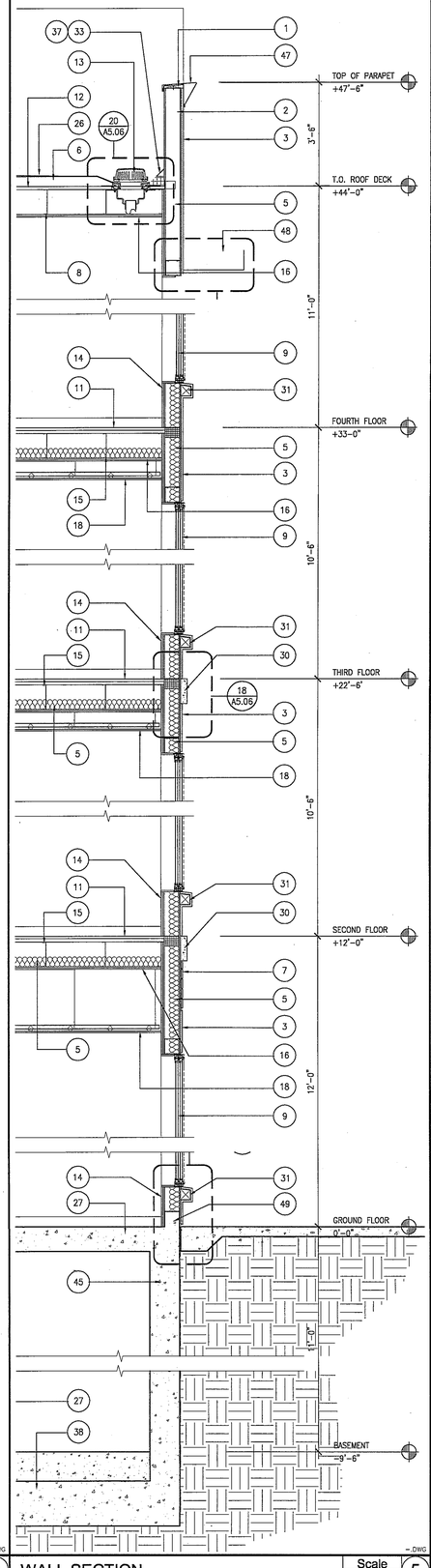

1. 2X P.T. SHAPED WOOD NAILER ATTACHED TO METAL STUD W/ SELF-TAPPING #14 GALV. COUNTERSUNK S.M.S. @ 4'-0" O.C.
2. 6" X 18 GA. METAL STUDS @ 16" O.C.
3. 7/8" EXTERIOR PLASTER OVER METAL LATH, (2) LAYERS D GRADE BUILDING PAPER AND 1/2" DENS-GLASS GOLD EXTERIOR GYP. BD. SHEATHING
4. 1" THICK JERUSALEM STONE VENEER OVER THIN SET MORTAR, WATERPROOFING MEMBRANE, LATICRETE MORTAR BED, METAL LATH, (2) LAYERS D GRADE BUILDING PAPER AND 1/2" DENS-GLASS GOLD EXTERIOR GYP. BD. SHEATHING
5. R13 FIBERGLASS BATT INSULATION
6. TAPERED RIGID INSULATION MIN 4" THICK AT LOW POINT. SLOPE UP 1/4" PER FT. TO DRAIN
7. 5/8" THICK THIN VENEER BRICK OVER PORTLAND CEMENT MORTAR, METAL LATH, (2) LAYERS D GRADE BUILDING PAPER AND 1/2" DENS-GLASS GOLD EXTERIOR GYP. BD. SHEATHING
8. COLD FORMED STEEL CHANNEL ROOF FRAMING. SEE STRUCT. DWGS.
9. NAIL-ON VINYL WINDOW. SEE WINDOW SCHEDULE
10. PREFABRICATED PRE-PAINTED STEEL GUARDRAIL
11. 1" LEVELROCK OVER METAL DECK. SEE STRUCTURAL DWGS.
12. METAL ROOF DECK. SEE STRUCTURAL DWGS.
13. ROOF DRAIN AND OVERFLOW BEYOND
14. (2) LAYERS 5/8" TYPE 'X' GYP. BD.
15. COLD FORMED STEEL CHANNEL FLOOR FRAMING. SEE STRUCTURAL DWGS.
16. (1) LAYER 5/8" TYPE 'C' GYP. BD. OVER 1/2" RESILIENT CHANNELS SPACED 12" O.C. ATTACHED TO FLOOR FRAMING ABOVE
17. 1/2" DENS-GLASS GOLD EXTERIOR GYP. BD. SHEATHING
18. SUSPENDED 5/8" GYP. BD. CEILING SYSTEM ATTACHED TO STRUCTURE ABOVE. SEE REFLECTED CEILING PLANS
19. SUSPENDED ACOUSTICAL CEILING SYSTEM ATTACHED TO STRUCTURE ABOVE. SEE REFLECTED CEILING PLANS
20. DEX-O-TEX WATERPROOFING OVER BALCONY DECK. SLOPE BALCONY TO SHEET DRAIN
21. SLIDING VINYL BALCONY DOOR. SEE DOOR SCHEDULE
22. ALUM. STOREFRONT DOOR. SEE DOOR SCHEDULE
23. ALUM. STOREFRONT WINDOW SYSTEM. SEE WINDOW/DOOR SCHEDULE
24. STEEL FRAMING. SEE STRUCTURAL DWGS.
25. COMPRESSIBLE FIRE SAFING AT EACH FLOOR EDGE, TYP
26. CLASS A MODIFIED BITUMEN BUILT-UP ROOF SYSTEM
27. CONCRETE SLAB. SEE STRUCTURAL DRAWINGS
28. CONCRETE DROP PANEL. SEE STRUCTURAL DRAWINGS
29. CONCRETE COLUMN BEYOND. SEE STRUCTURAL DRAWINGS
30. JERUSALEM STONE BANDING
31. JERUSALEM STONE WINDOW SILL
32. GALV. STUCCO REGLET AND COUNTERFLASHING MIN 8" ABOVE ROOF INSULATION
33. 3" FIBER CANT STRIP, TYP AT PARAPET WALL
34. CRICKET PER ROOF PLAN
35. P.T. SHAPED 2X BLOCKING
36. JERUSALEM STONE COPING
37. BASE FLASHING OVER CANT STRIP
38. CONCRETE FOOTING. SEE STRUCTURAL DRAWINGS
39. (2) LAYERS 5/8" TYPE 'X' GYP. BD. OVER 1 1/2" FURRING CHANNEL
40. EXTERIOR PLASTER SOFFIT. SEE REFLECTED CEILING PLANS
41. GALV. REGLET AND COUNTERFLASHING. CARRY FLASHING UP UNDER COPING
42. 4" X 20 GA. METAL STUDS @ 16" O.C.
43. GALV. FOUNDATION WEEP SCREED. RUN DEX-O-TEX UP UNDER WEEP SCREED
44. METAL TRACK BACKING
45. CONCRETE FOUNDATION WALL. SEE STRUCTURAL DRAWINGS
46. PRECAST CONCRETE COPING
47. GALV. STEEL COPING. PAINT
48. GALV. STEEL LOUVERED SUNSHADE. PAINT
49. 6" H CONCRETE CURB

NOTE:
1. DETAILS ARE TYPICAL FOR LIKE CONDITIONS.
2. KEY NOTES ABOVE ARE ONLY APPLICABLE WHERE SHOWN ON THIS SHEET

FIRE SAFING NOTES:
FORMING MATERIAL: MIN. 4.0 pcf MINERAL WOOL BATT INSULATION INSTALLED IN LINEAR GAP IN BETWEEN EXTERIOR METAL STUDS AT EVERY FLOOR LEVEL AS PERMANENT ASSAMBLY. MATERIAL TO BE CUT TO A 4 ¼" DEPTH AND STACKED TO A THIKNESS WHICH IS AT LEAST 25 % GREATER THAN THE WIDTH OF THE LINEAR GAP. THE MATERIAL IS COMPRESSED AND INSERTED CUT-EDGE FIRST INTO THE LINEAR GAP AND RECESSED FROM TOP SURFACE OF FLOOR TO ACCOMODATE THE DESIRED THIKNESS OF FILL MATERIAL.
FILL: MIN. ¾" THICKNESS OF FILL MATERIAL APPLIED WITH THE JOINT, FLUSH WITH TOP SURFACE OF FLOOR

Key Notes — Scale N.T.S. — 1

WWC OT
Widom Wein Cohen O'Leary Terasawa

3130 Wilshire Boulevard
Sixth Floor
Santa Monica, California 90403
T (310) 828-0040
F (310) 453-9432
www.wwcot.com

Inland Empire
Palm Springs
Moorpark
Shanghai, China

RECEIVED
10:08 am, Aug 14, 2008
FRAMEMAX

Building Department Submittal: June 1, 2007
Issued For Bid: _____
Issued For Construction: _____

KEY PLAN

Project:
Jewish Home for The Aging
FOUNTAINVIEW AT EISENBERG VILLAGE
6440 Wilbur Ave
Reseda, CA. 91335

JEWISH HOME
JEWISH HOME FOR THE AGING
18855 Victory Blvd.
Reseda, CA 91335
Project Number: 04206.00

Exterior Wall Sections

Date: 04/05/2007
Drawn By: _____
Checked By: _____

A5.03
Sheet No.

File Path & Name: F:\PROJECTS\04206.00\A-CD\SHEETS\A5.03.DWG
© WWCOT 2006 May 28, 2007 - 03:45 pm

RECEIVED BY SUFFOLK ON 06/01/07

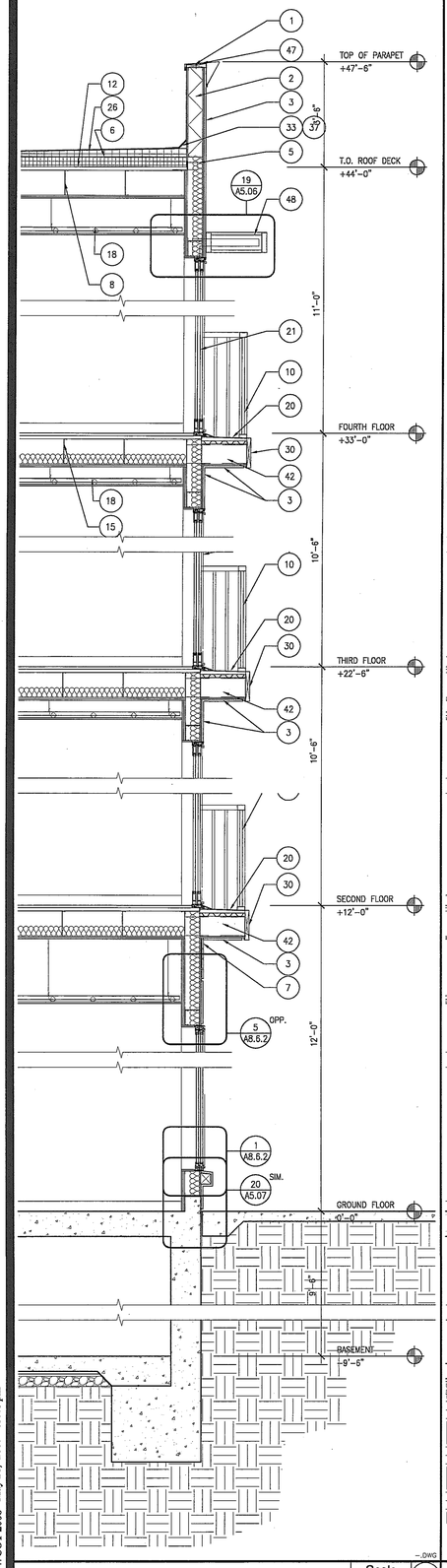

WALL SECTION — Scale 1/2"=1'-0" — 17

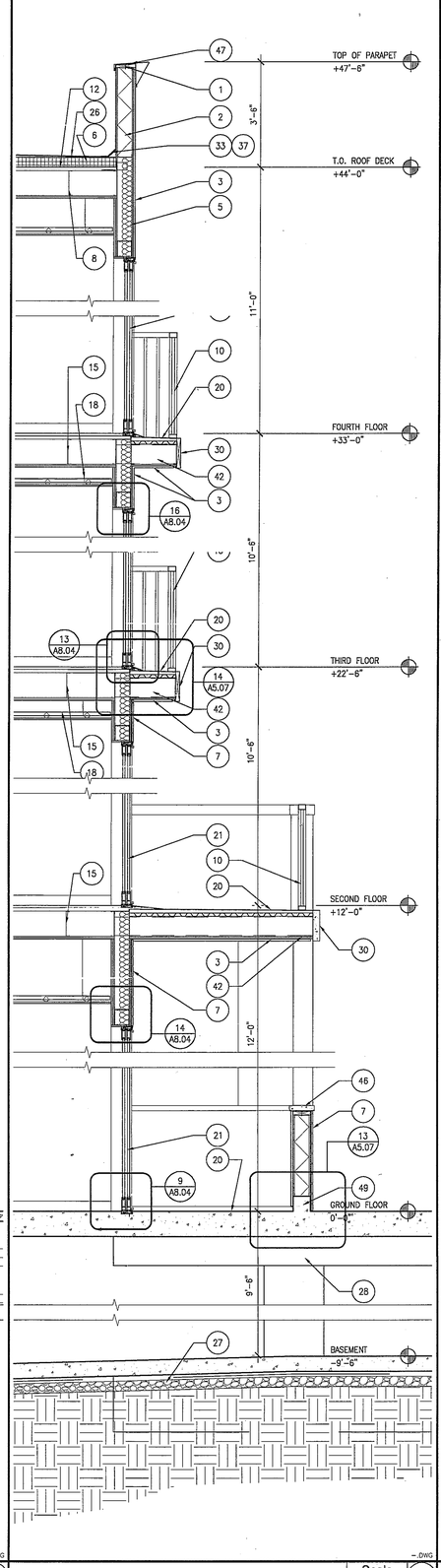

WALL SECTION — Scale 1/2"=1'-0" — 13

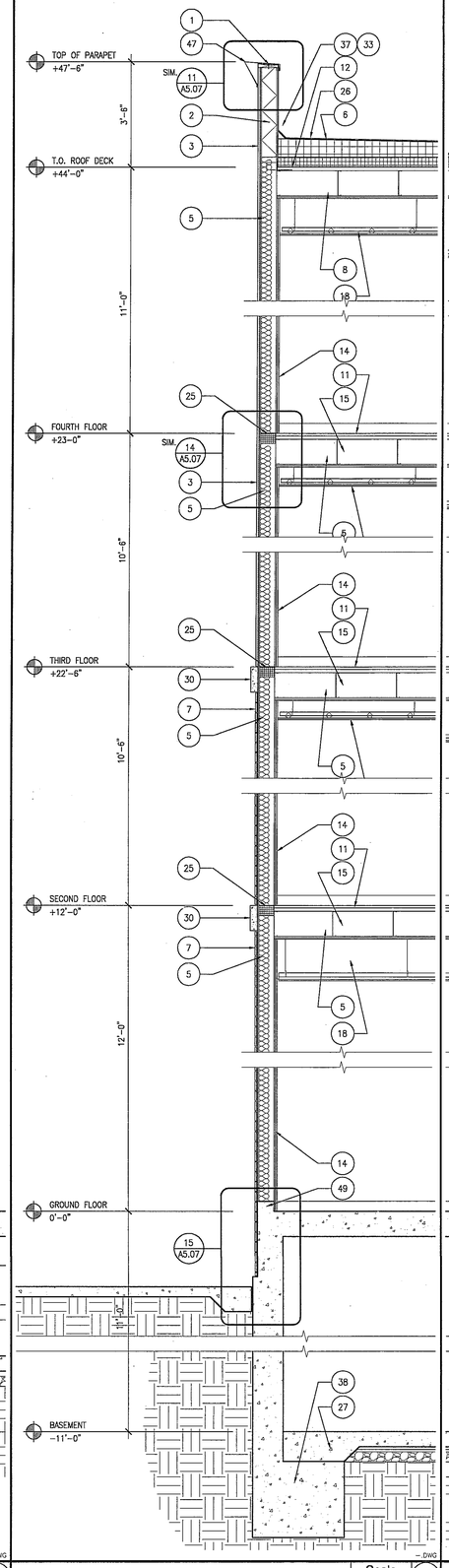

WALL SECTION — Scale 1/2"=1'-0" — 9

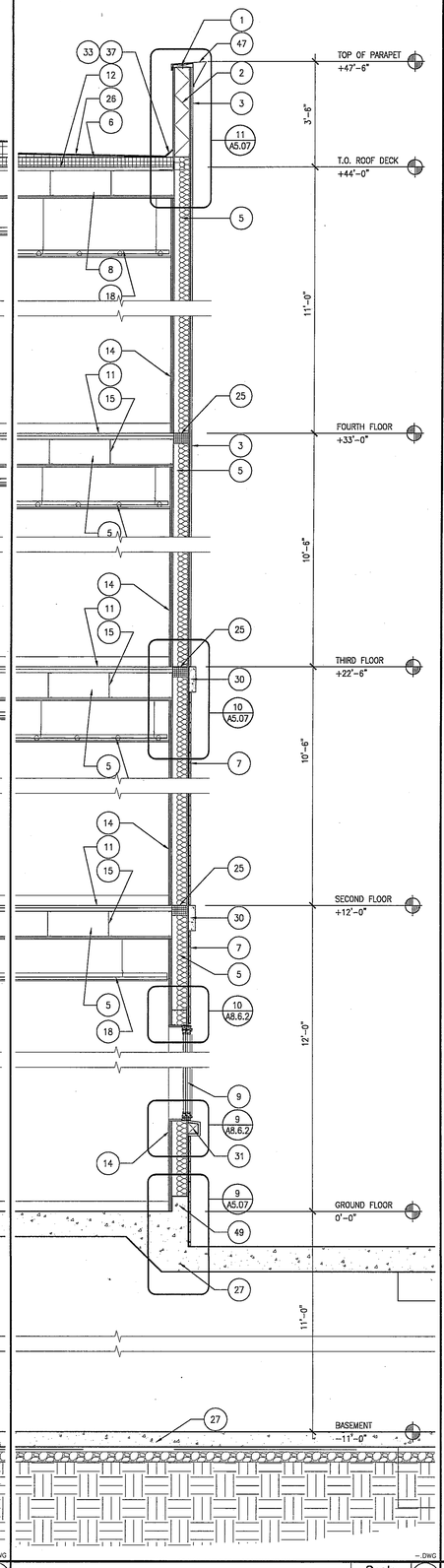

WALL SECTION — Scale 1/2"=1'-0" — 5

1. 2X P.T. SHAPED WOOD NAILER ATTACHED TO METAL STUD W/ SELF-TAPPING #14 GALV. COUNTERSUNK S.M.S. @ 4'-0" O.C.
2. 6" X 18 GA. METAL STUDS @ 16" O.C.
3. 7/8" EXTERIOR PLASTER OVER METAL LATH, (2) LAYERS D GRADE BUILDING PAPER AND 1/2" DENS-GLASS GOLD EXTERIOR GYP. BD. SHEATHING
4. 1" THICK JERUSALEM STONE VENEER OVER THIN SET MORTAR, WATERPROOFING MEMBRANE, LATICRETE MORTAR BED, METAL LATH, (2) LAYERS D GRADE BUILDING PAPER AND 1/2" DENS-GLASS GOLD EXTERIOR GYP. BD. SHEATHING
5. R13 FIBERGLASS BATT INSULATION
6. TAPERED RIGID INSULATION MIN 4" THICK AT LOW POINT. SLOPE UP 1/4" PER FT. TO DRAIN
7. 5/8" THICK THIN VENEER BRICK OVER PORTLAND CEMENT MORTAR, METAL LATH, (2) LAYERS D GRADE BUILDING PAPER AND 1/2" DENS-GLASS GOLD EXTERIOR GYP. BD. SHEATHING
8. COLD FORMED STEEL CHANNEL ROOF FRAMING. SEE STRUCT. DWGS.
9. NAIL-ON VINYL WINDOW. SEE WINDOW SCHEDULE
10. PREFABRICATED PRE-PAINTED STEEL GUARDRAIL
11. 1" LEVELROCK OVER METAL DECK. SEE STRUCTURAL DWGS.
12. METAL ROOF DECK. SEE STRUCTURAL DWGS.
13. ROOF DRAIN AND OVERFLOW BEYOND
14. (2) LAYERS 5/8" TYPE 'X' GYP. BD.
15. COLD FORMED STEEL CHANNEL FLOOR FRAMING. SEE STRUCTURAL DWGS.
16. (1) LAYER 5/8" TYPE 'C' GYP. BD. OVER 1/2" RESILIENT CHANNELS SPACED 12" O.C. ATTACHED TO FLOOR FRAMING ABOVE
17. 1/2" DENS-GLASS GOLD EXTERIOR GYP. BD. SHEATHING
18. SUSPENDED 5/8" GYP. BD. CEILING SYSTEM ATTACHED TO STRUCTURE ABOVE. SEE REFLECTED CEILING PLANS
19. SUSPENDED ACOUSTICAL CEILING SYSTEM ATTACHED TO STRUCTURE ABOVE. SEE REFLECTED CEILING PLANS
20. DEX-O-TEX WATERPROOFING OVER BALCONY DECK. SLOPE BALCONY TO SHEET DRAIN
21. SLIDING VINYL BALCONY DOOR. SEE DOOR SCHEDULE
22. ALUM. STOREFRONT DOOR. SEE DOOR SCHEDULE
23. ALUM. STOREFRONT WINDOW SYSTEM. SEE WINDOW/DOOR SCHEDULE
24. STEEL FRAMING. SEE STRUCTURAL DWGS.
25. COMPRESSIBLE FIRE SAFING AT EACH FLOOR EDGE, TYP
26. CLASS A MODIFIED BITUMEN BUILT-UP ROOF SYSTEM
27. CONCRETE SLAB. SEE STRUCTURAL DRAWINGS
28. CONCRETE DROP PANEL. SEE STRUCTURAL DRAWINGS
29. CONCRETE COLUMN BEYOND. SEE STRUCTURAL DRAWINGS
30. JERUSALEM STONE BANDING
31. JERUSALEM STONE WINDOW SILL
32. GALV. STUCCO REGLET AND COUNTERFLASHING MIN 8" ABOVE ROOF INSULATION
33. 3" FIBER CANT STRIP, TYP AT PARAPET WALL
34. CRICKET PER ROOF PLAN
35. P.T. SHAPED 2X BLOCKING
36. JERUSALEM STONE COPING
37. BASE FLASHING OVER CANT STRIP
38. CONCRETE FOOTING. SEE STRUCTURAL DRAWINGS
39. (2) LAYERS 5/8" TYPE 'X' GYP. BD. OVER 1 1/2" FURRING CHANNEL
40. EXTERIOR PLASTER SOFFIT. SEE REFLECTED CEILING PLANS
41. GALV. REGLET AND COUNTERFLASHING. CARRY FLASHING UP UNDER COPING
42. 4" X 20 GA. METAL STUDS @ 16" O.C.
43. GALV. FOUNDATION WEEP SCREED. RUN DEX-O-TEX UP UNDER WEEP SCREED
44. METAL TRACK BACKING
45. CONCRETE FOUNDATION WALL. SEE STRUCTURAL DRAWINGS
46. PRECAST CONCRETE COPING
47. GALV. STEEL COPING. PAINT
48. GALV. STEEL LOUVERED SUNSHADE. PAINT
49. 6" H CONCRETE CURB

NOTE:
1. DETAILS ARE TYPICAL FOR LIKE CONDITIONS.
2. KEY NOTES ABOVE ARE ONLY APPLICABLE WHERE SHOWN ON THIS SHEET

FIRE SAFING NOTES:
FORMING MATERIAL: MIN. 4.0 pcf MINERAL WOOL BATT INSULATION INSTALLED IN LINEAR GAP IN BETWEEN EXTERIOR METAL STUDS AT EVERY FLOOR LEVEL AS PERMANENT ASSAMBLY. MATERIAL TO BE CUT TO A 4 ¼" DEPTH AND STACKED TO A THIKNESS WHICH IS AT LEAST 25 % GREATER THAN THE WIDTH OF THE LINEAR GAP. THE MATERIAL IS COMPRESSED AND INSERTED CUT-EDGE FIRST INTO THE LINEAR GAP AND RECESSED FROM TOP SURFACE OF FLOOR TO ACCOMODATE THE DESIRED THIKNESS OF FILL MATERIAL.
FILL: MIN. ¼" THICKNESS OF FILL MATERIAL APPLIED WITH THE JOINT, FLUSH WITH TOP SURFACE OF FLOOR

Key Notes — Scale N.T.S. — 1

WWC OT
Widom Wein Cohen O'Leary Terasawa
3130 Wilshire Boulevard
Sixth Floor
Santa Monica, California 90403
T (310) 828-0040
F (310) 453-9432
www.wwcot.com
Inland Empire
Palm Springs
Moorpark
Shanghai, China

RECEIVED
10:08 am, Aug 14, 2008
FRAMEMAX

Building Department Submittal: June 1, 2007
Issued For Bid:
Issued For Construction:



KEY PLAN

Project:
Jewish Home for The Aging
FOUNTAINVIEW AT EISENBERG VILLAGE
6440 Wilbur Ave
Reseda, CA. 91335

JEWISH HOME FOR THE AGING
18855 Victory Blvd.
Reseda, CA 91335
Project Number: 04206.00

Exterior Wall Sections

Date: 04/05/2007
Drawn By:
Checked By:

A5.04
Sheet No.

File Path & Name: F:\PROJECTS\04206-00\A-CD'S\SHEETS\A5.04.DWG
© WWCOT 2006 May 28, 2007 - 03:46 pm

RECEIVED BY SUFFOLK ON 06/01/07

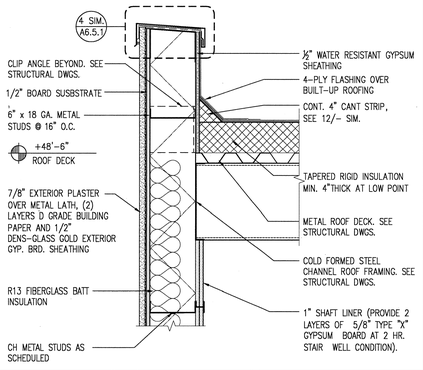

PARAPET AT ELEVATOR

Scale 1 1/2"=1'-0" 20

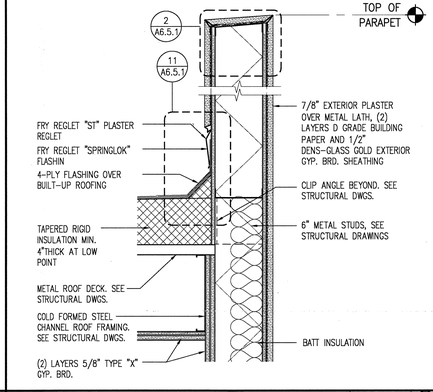

PARAPET DETAIL AT ARCHED ENTRY

Scale 1 1/2"=1'-0" 16

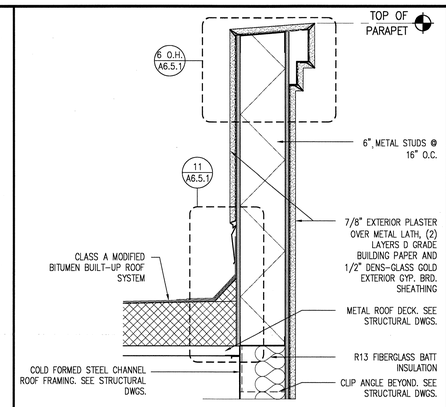

PARAPET DETAIL

Scale 1 1/2"=1'-0" 12

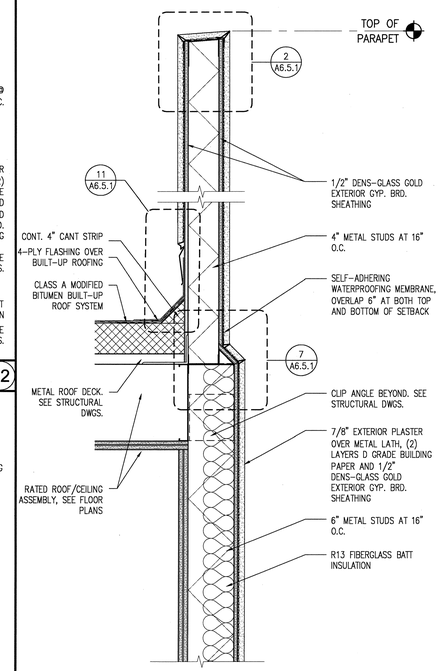

NOTE:
FOR TYPICAL NOTES SEE DETAIL 2/A5.06

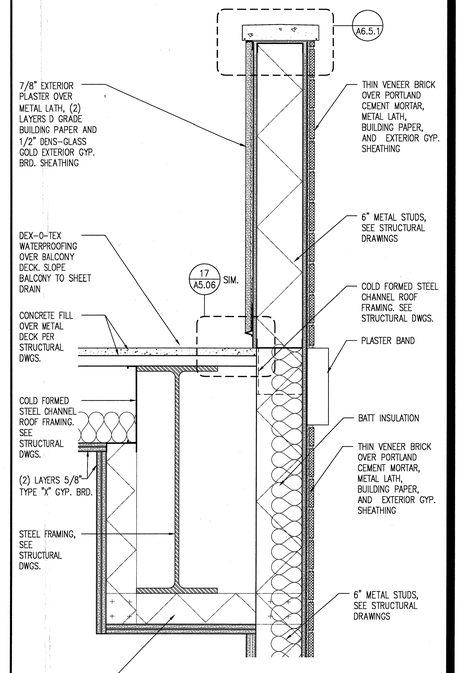

WALL/SOFFIT DETAIL

Scale 1 1/2" = 1'-0" 3

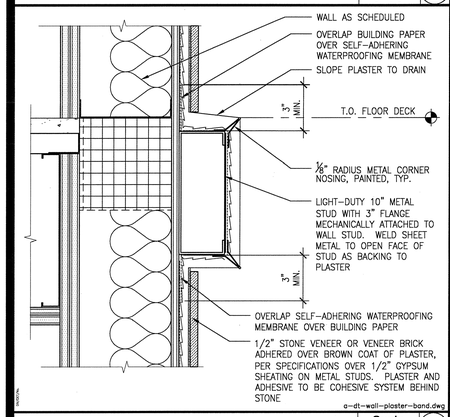

a-dt-wall-plaster-band.dwg

PLASTER BANDING AT PLASTER WALL

Scale 3" =1'-0" 19

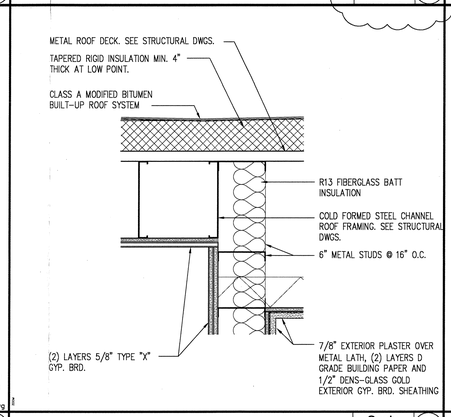

BALCONY DRAIN DETAIL

Scale 1 1/2"=1'-0" 15

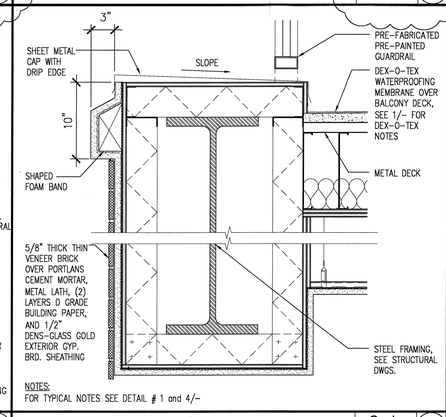

NOTES:
FOR TYPICAL NOTES SEE DETAIL # 1 and 4/-

BALCONY DRAIN DETAIL

Scale 1 1/2"=1'-0" 11

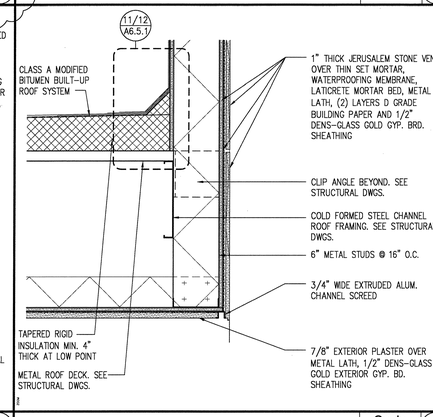

PARAPET DETAIL

Scale 1 1/2" = 1'-0" 7

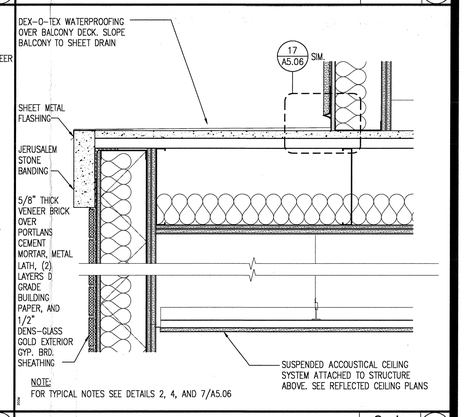

NOTE:
FOR TYPICAL NOTES SEE DETAILS 2, 4, AND 7/A5.06

WALL/CEILING DETAIL

Scale 1 1/2"=1'-0" 2

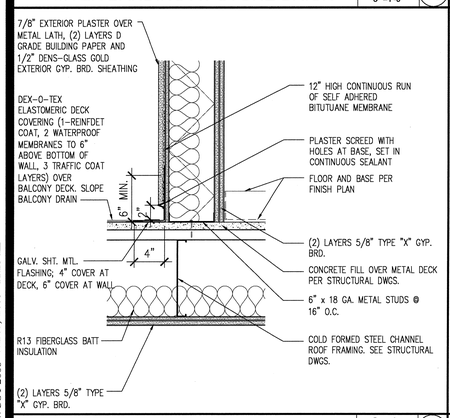

PLASTER BANDING AT STONE/BRICK

Scale 3" =1'-0" 18

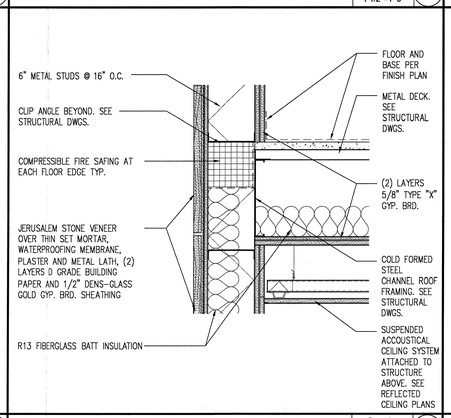

ROOF AND SOFFIT DETAIL

Scale 1 1/2"=1'-0" 14

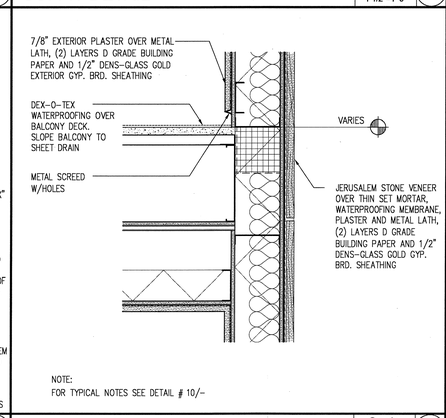

NOTE:
FOR TYPICAL NOTES SEE DETAIL # 10/-

SOFFIT DETAIL

Scale 1 1/2"=1'-0" 10

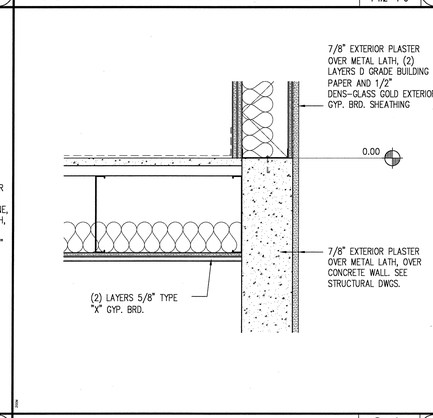

ROOF/WALL CONNECTION DETAIL

Scale 1 1/2"=1'-0" 6

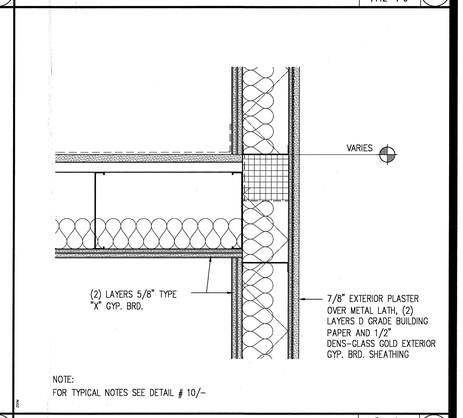

NOTE:
FOR TYPICAL NOTES SEE DETAIL # 10/-

WALL/CEILING DETAIL

Scale 1 1/2"=1'-0" 1

WALL/CEILING DETAIL

Scale 1 1/2"=1'-0" 17

WALL/CEILING DETAIL

Scale 1 1/2"=1'-0" 13

WALL/CEILING DETAIL

Scale 1 1/2"=1'-0" 9

WALL/CEILING DETAIL AT GROUND FL.

Scale 1 1/2"=1'-0" 5

WWC OT
Widom Wein Cohen O'Leary Terasawa

3130 Wilshire Boulevard
Sixth Floor
Santa Monica, California 90403
T (310) 828-0040
F (310) 453-9432
www.wwcot.com

Inland Empire
Palm Springs
Moorpark
Shanghai, China

RECEIVED
10:08 am, Aug 14, 2008
FRAMEMAX

Building Department Submittal: June 1, 2007
Issued For Bid:
Issued For Construction: January 29, 2008

10 6-4-2008 BALCONY DRAIN REVISIONS

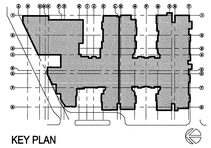

KEY PLAN

RECEIVED
JUN 06 2008
BUREAU OF CONSTRUCTION

Project:
Jewish Home for The Aging
FOUNTAINVIEW AT BISENBERG VILLAGE
6440 Wilbur Ave
Reseda, CA. 91335

JEWISH HOME
JEWISH HOME FOR THE AGING
18855 Victory Blvd.
Reseda, CA 91335

Project Number: 04206.00

Exterior Wall Details

Date: 01/21/2008
Drawn By:
Checked By:

A5.06
Sheet No.

File Path & Name: F:\PROJECTS\04206-00\A-CD\SHEETS\A5.06.DWG
© WWCOT 2006 Jun 05, 2008 - 11:25 am

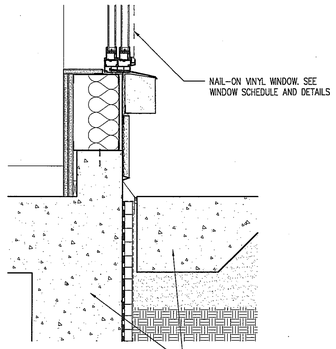

NOTE:
FOR TYPICAL NOTES SEE DETAIL # 17/A5.6

CURB DETAIL

Scale 1 1/2"=1'-0" — 20

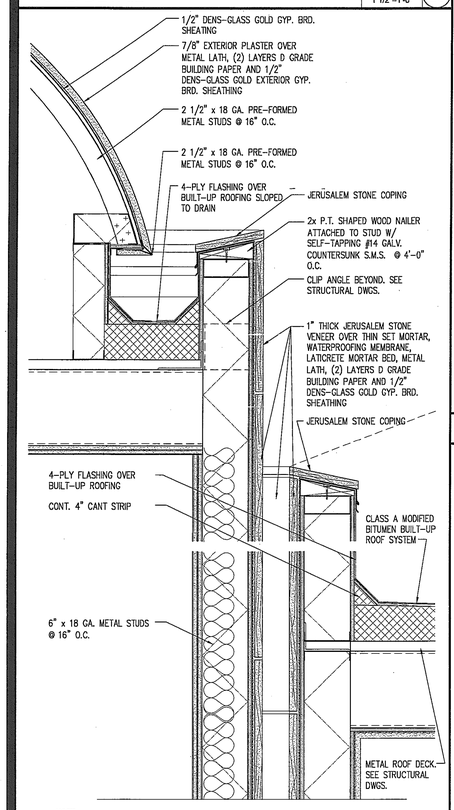

NOTE:
FOR TYPICAL NOTES SEE DETAIL # 3/A5.6

STONE WALL/STUCCO DOME DETAIL

Scale 1 1/2" = 1'-0" — 18

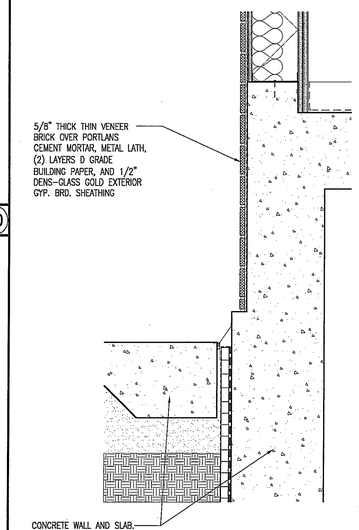

NOTE:
FOR TYPICAL NOTES SEE DETAIL # 7/-

CURB/CONCRETE WALL DETAIL

Scale 1 1/2" = 1'-0" — 15

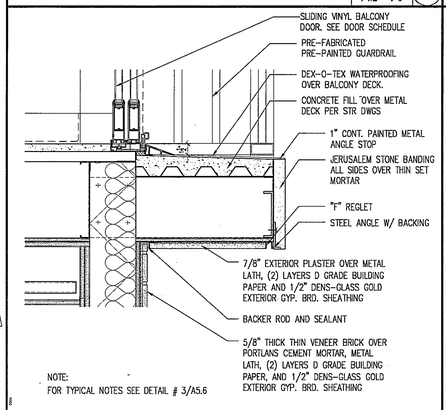

NOTE:
FOR TYPICAL NOTES SEE DETAIL # 3/A5.6

BALCONY/SOFFIT DETAIL

Scale 1 1/2"=1'-0" — 14

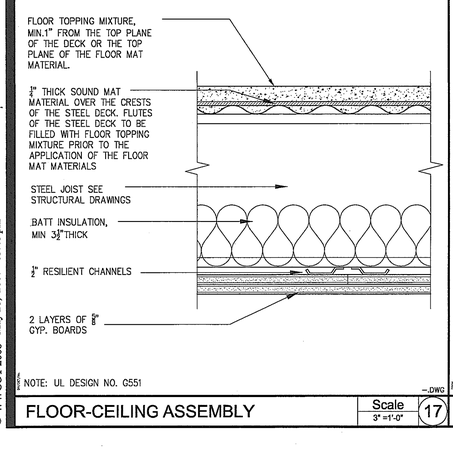

NOTE: UL DESIGN NO. G551

FLOOR-CEILING ASSEMBLY

Scale 3" = 1'-0" — 17

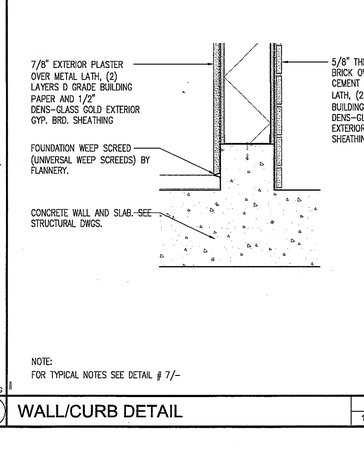

NOTE:
FOR TYPICAL NOTES SEE DETAIL # 7/-

WALL/CURB DETAIL

Scale 1 1/2"=1'-0" — 13

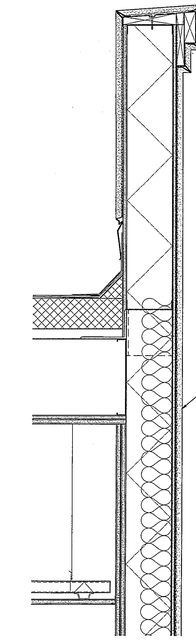

NOTE:
FOR TYPICAL NOTES SEE DETAIL # 2/A5.6

SOFFIT & PARAPET AT MULTIPURPOSE

Scale 1-1/2" = 1'-0" — 11

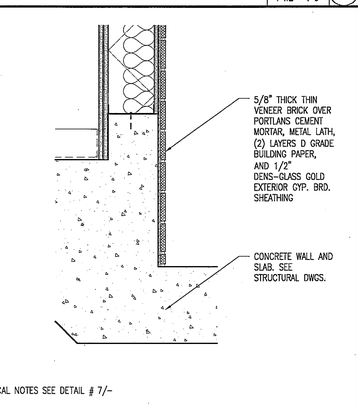

NOTE:
FOR TYPICAL NOTES SEE DETAIL # 7/-

CURB DETAIL

Scale 1 1/2"=1'-0" — 10

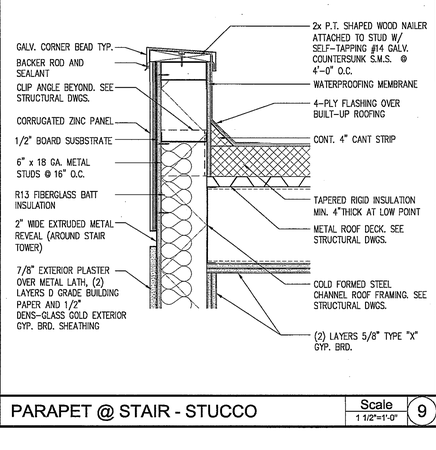

PARAPET @ STAIR - STUCCO

Scale 1 1/2"=1'-0" — 9

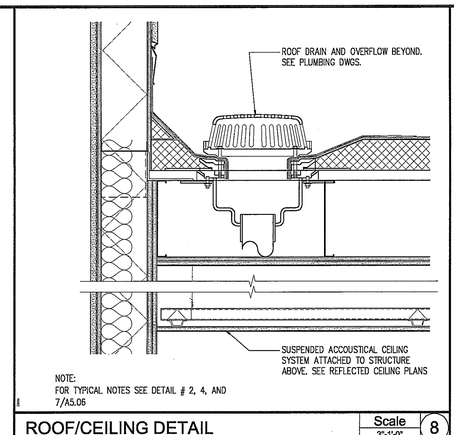

NOTE:
FOR TYPICAL NOTES SEE DETAIL # 2, 4, AND 7/A5.06

ROOF/CEILING DETAIL

Scale 3"-1'-0" — 8

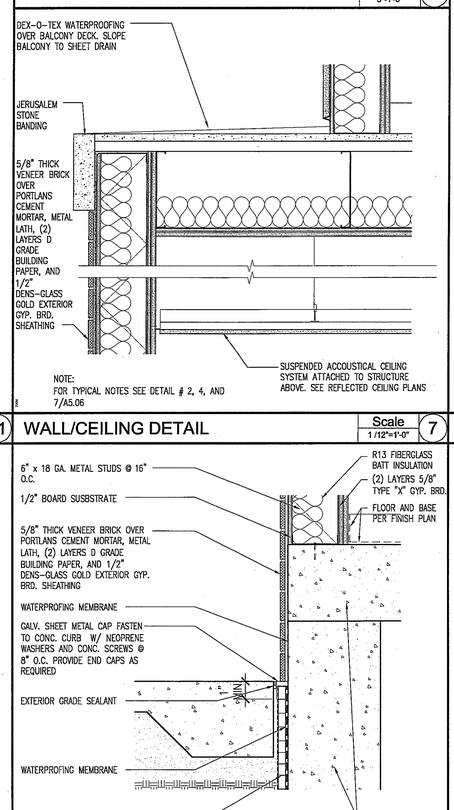

NOTE:
FOR TYPICAL NOTES SEE DETAIL # 2, 4, AND 7/A5.06

WALL/CEILING DETAIL

Scale 1 1/2"=1'-0" — 7

CURB DETAIL

Scale 1 1/2"=1'-0" — 6

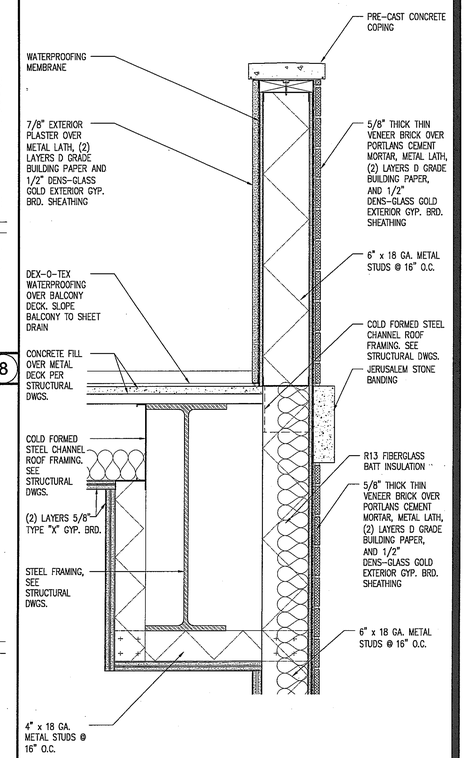

WALL/SOFFIT DETAIL

Scale 1 1/2" = 1'-0" — 3

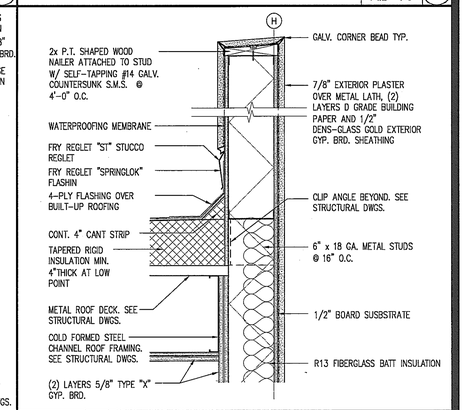

PARAPET DETAIL

Scale 1 1/2"=1'-0" — 2

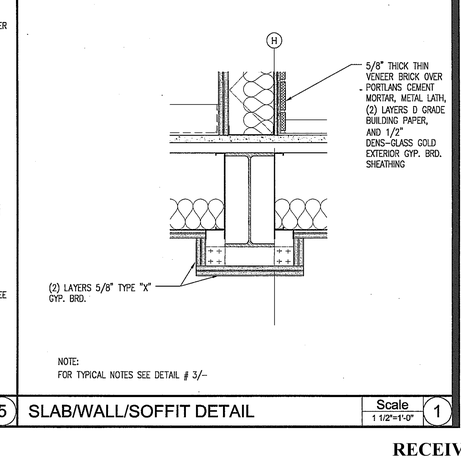

NOTE:
FOR TYPICAL NOTES SEE DETAIL # 3/-

SLAB/WALL/SOFFIT DETAIL

Scale 1 1/2"=1'-0" — 1

PARAPET @ STAIR - STONE

Scale 1 1/2"=1'-0" — 5

WWC OT
Widom Wein Cohen O'Leary Terasawa

3130 Wilshire Boulevard
Sixth Floor
Santa Monica, California 90403
T (310) 828-0040
F (310) 453-9432
www.wwcot.com

Inland Empire
Palm Springs
Moorpark
Shanghai, China

RECEIVED
10:08 am, Aug 14, 2008
FRAMEMAX

Building Department Submittal: June 1, 2007
Issued For Bid:
Issued For Construction:

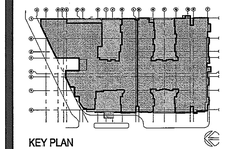

KEY PLAN

Project:
Jewish Home for The Aging
FOUNTAINVIEW AT EISENBERG VILLAGE

6440 Wilbur Ave
Reseda, CA. 91335

JEWISH HOME FOR THE AGING
18855 Victory Blvd.
Reseda, CA 91335

Project Number: 04206.00

Exterior Wall Details

Date: 04/05/2007
Drawn By:
Checked By:

A5.07
Sheet No.

File Path & Name: F:\PROJECTS\04206-00\A-CD\SHEETS\A5.07.DWG
© WWCOT 2006 May 28, 2007 - 03:46 pm

RECEIVED BY SUFFOLK ON 06/01/07

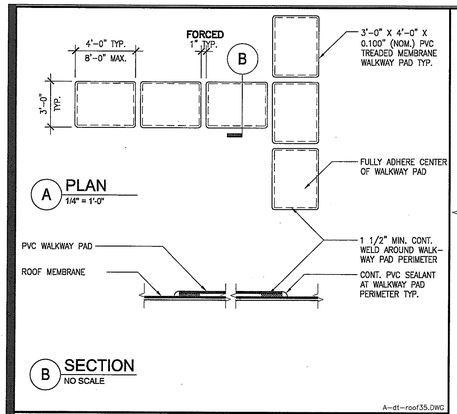

A-dt-roof35.DWG

ROOF WALKING PADS DETAIL

Scale 1/4" = 1'-0" | 20

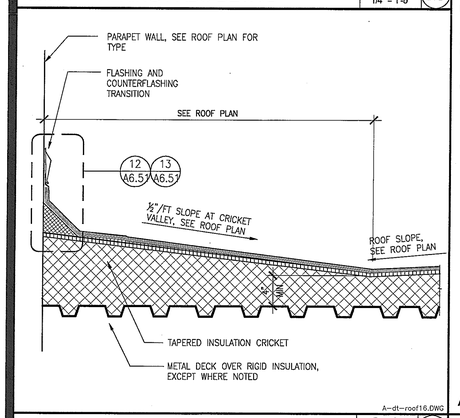

A-dt-roof16.DWG

ROOF CRICKET DETAIL

Scale 1 1/2" = 1'-0" | 19

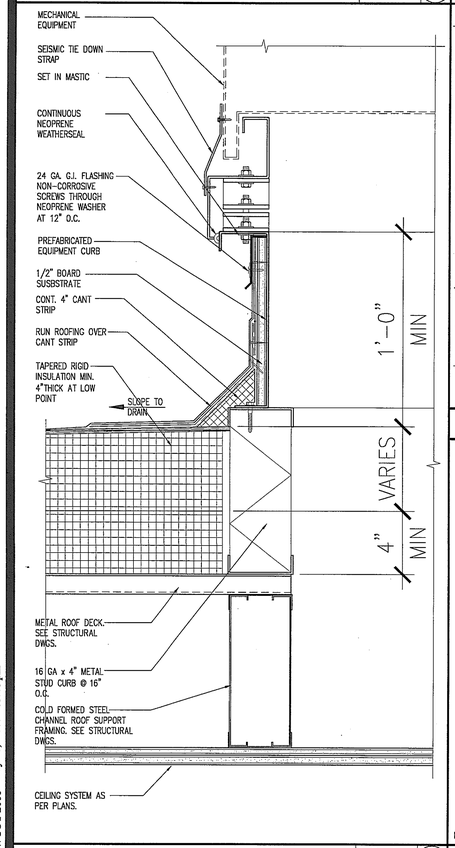

EQUIPMENT CURB DETAIL

Scale 3" = 1'-0" | 17

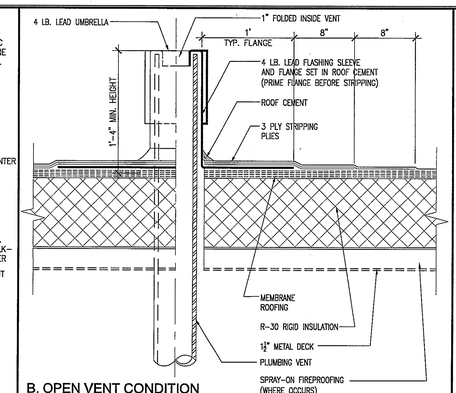

B. OPEN VENT CONDITION

NOTE:
1. PAINT EXPOSED VENT, COLOR TO MATCH ADJACENT ROOF FINISH COLOR.
2. CALLOUTS IN THIS DETAIL ARE TYPICAL IN LIKE CONDITIONS

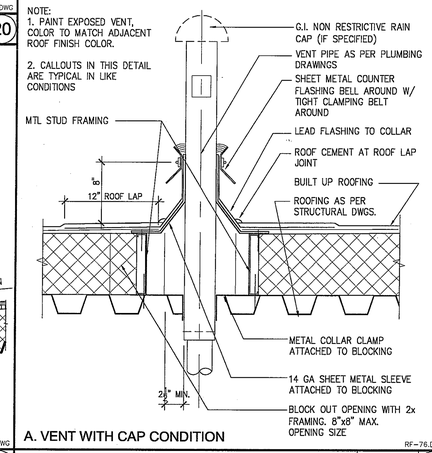

A. VENT WITH CAP CONDITION

RF-76.DWG

PLUMBING VENT FLASHING DETAILS

Scale 1 1/2" = 1'-0" | 15

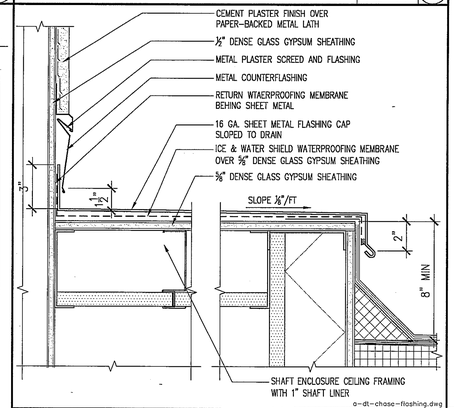

a-dt-chase-flashing.dwg

FLASHING AT SHAFT TO WALL DETAIL

Scale 3" = 1'-0" | 14

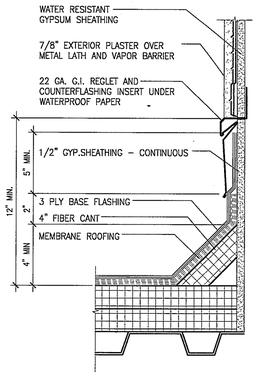

NOTE: SEE DETAIL 12 FOR ADDITIONAL INFORMATION

a-dt-base flashing @ wall.dwg

BASE FLASHING AT WALL

Scale 3"=1'-0" | 9

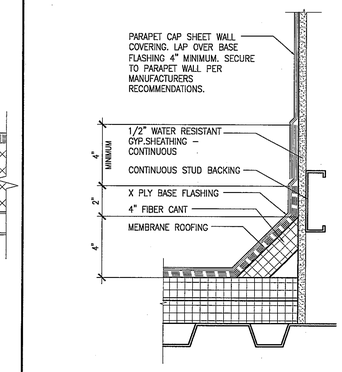

A-dt-parapet09.dwg

BASE FLASHING @ PARAPET WALL

Scale 3"=1'-0" | 12

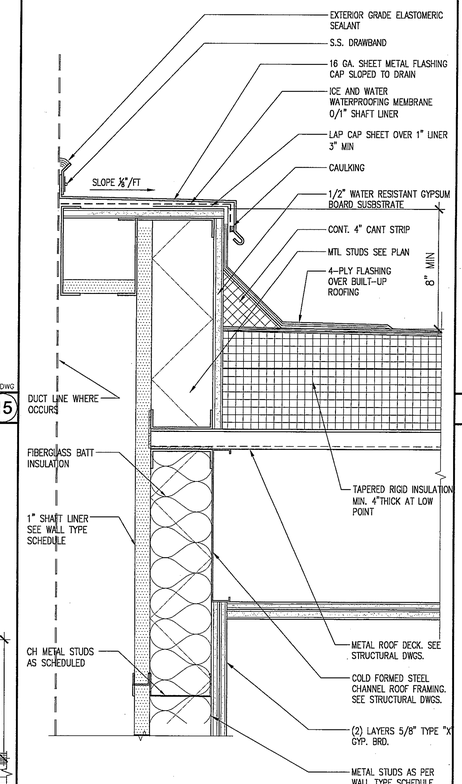

.DWG

MECHANICAL SHAFT DETAIL

Scale 3" = 1'-0" | 10

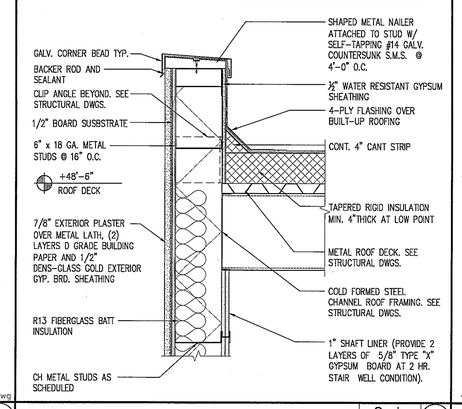

PARAPET @ ELEVATOR

Scale 1 1/2"=1'-0" | 9

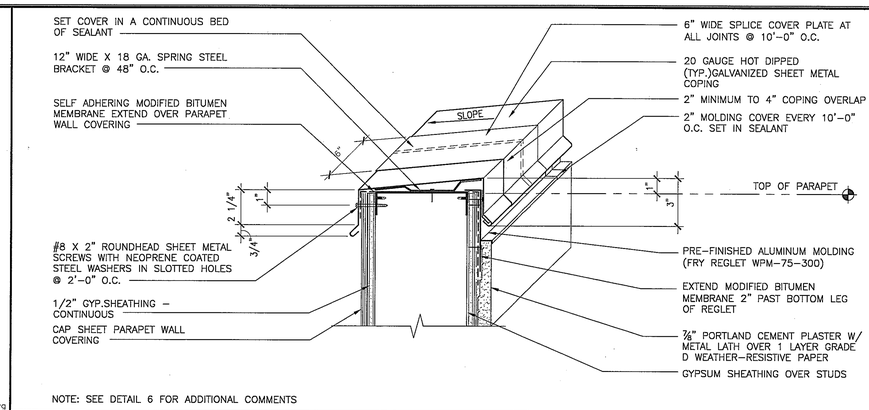

NOTE: SEE DETAIL 6 FOR ADDITIONAL COMMENTS

METAL PARAPET COPING

Scale 3"=1'-0" | 4

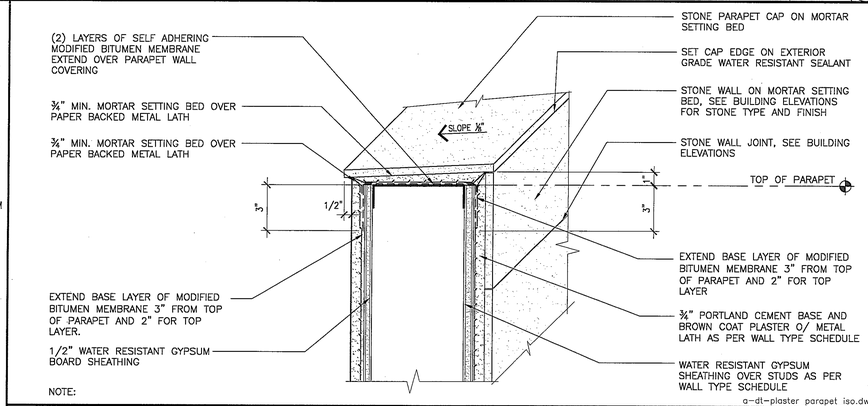

NOTE:

a-dt-plaster parapet iso.dwg

STONE PARAPET COPING

Scale 3"=1'-0" | 3

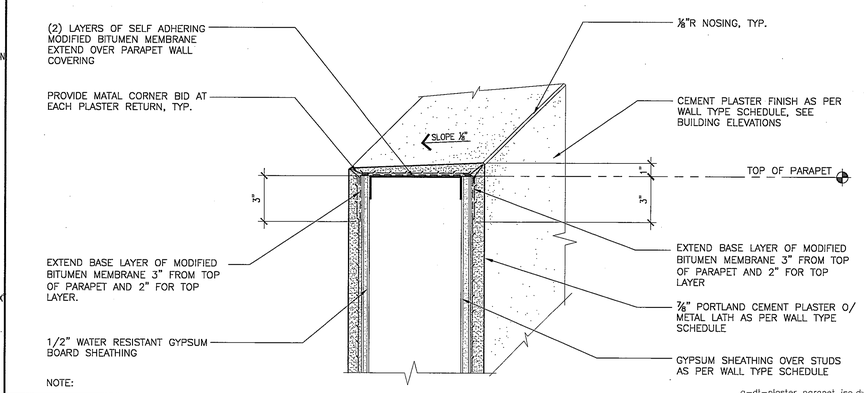

NOTE:

a-dt-plaster parapet iso.dwg

PLASTER PARAPET COPING

Scale 3"=1'-0" | 2

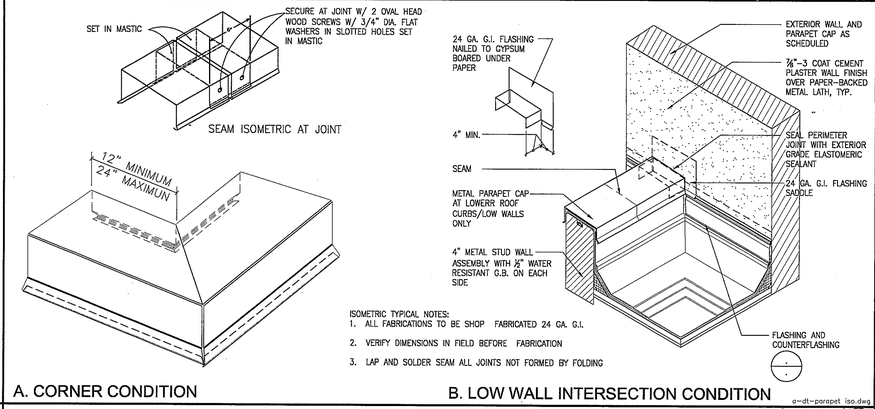

ISOMETRIC TYPICAL NOTES:
1. ALL FABRICATIONS TO BE SHOP FABRICATED 24 GA. G.I.
2. VERIFY DIMENSIONS IN FIELD BEFORE FABRICATION
3. LAP AND SOLDER SEAM ALL JOINTS NOT FORMED BY FOLDING

A. CORNER CONDITION

B. LOW WALL INTERSECTION CONDITION

a-dt-parapet iso.dwg

INTERIOR PARAPET WALL ISOMETRICS

Scale NTS | 1

WWC OT
Widom Wein Cohen O'Leary Terasawa

3130 Wilshire Boulevard
Sixth Floor
Santa Monica, California 90403
T (310) 828-0040
F (310) 453-9432
www.wwcot.com

Inland Empire
Palm Springs
Moorpark
Shanghai, China

RECEIVED
10:08 am, Aug 14, 2008
FRAMEMAX

Building Department Submittal: June 1, 2007
Issued For Bid: _____
Issued For Construction: _____

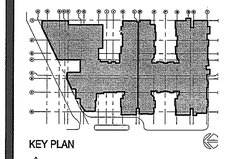

KEY PLAN

Project:
Jewish Home for The Aging
FOUNTAINVIEW AT EISENBERG VILLAGE
6440 Wilbur Ave
Reseda, CA. 91335

JEWISH HOME FOR THE AGING
18855 Victory Blvd.
Reseda, CA 91335
Project Number: 04206.00

ROOF DETAILS

Date: 04/05/2007
Drawn By: _____
Checked By: _____

A6.5.1
Sheet No.

File Path & Name: F:\PROJECTS\04206-00\A-CD\SHEETS\A6.5.1.DWG
© WWCOT 2006 May 28, 2007 - 03:40 pm

RECEIVED BY SUFFOLK ON 06/01/07

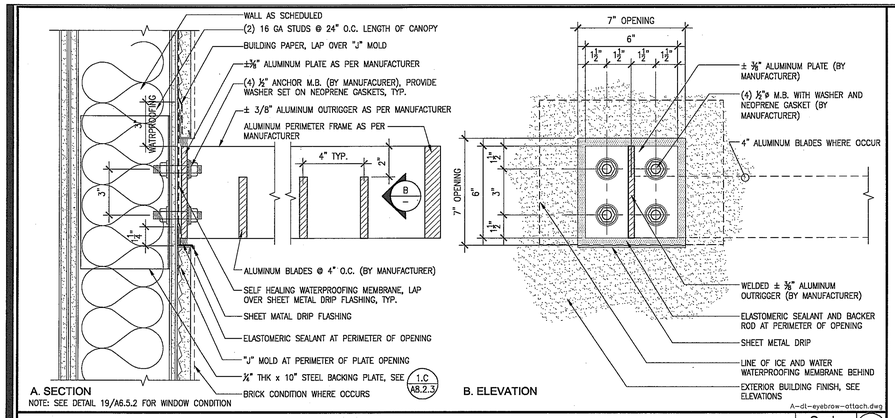

A. SECTION
NOTE: SEE DETAIL 19/A6.5.2 FOR WINDOW CONDITION

B. ELEVATION

A-dt-eyebrow-attach.dwg

EYEBROW DETAIL AT WALL CONDITION

Scale 3" = 1'-0" | 16

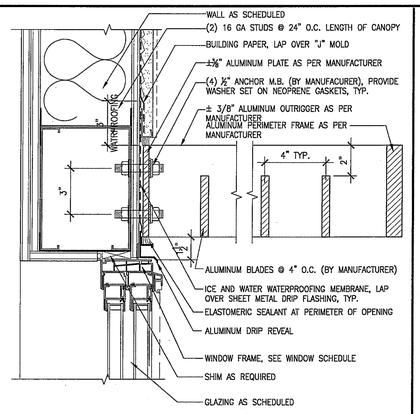

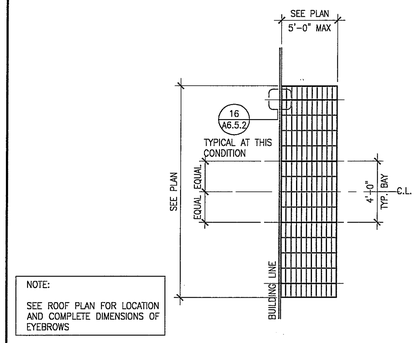

NOTE:
SEE ROOF PLAN FOR LOCATION AND COMPLETE DIMENSIONS OF EYEBROWS

C. EYEBROW TYPE "C"

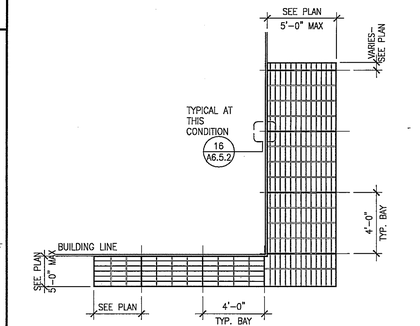

B. EYEBROW TYPE "B"

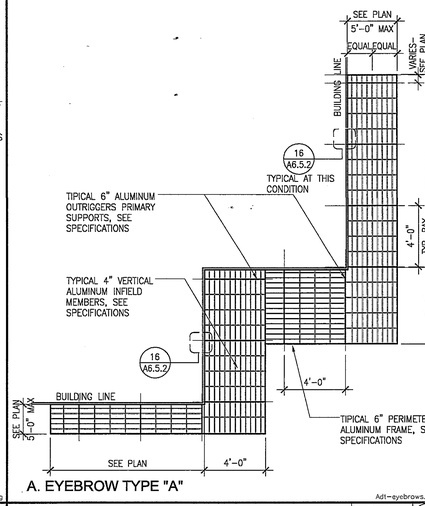

A. EYEBROW TYPE "A"

Adt-eyebrows.dwg

EYEBROW TYPES

Scale 3" = 1'-0" | 13

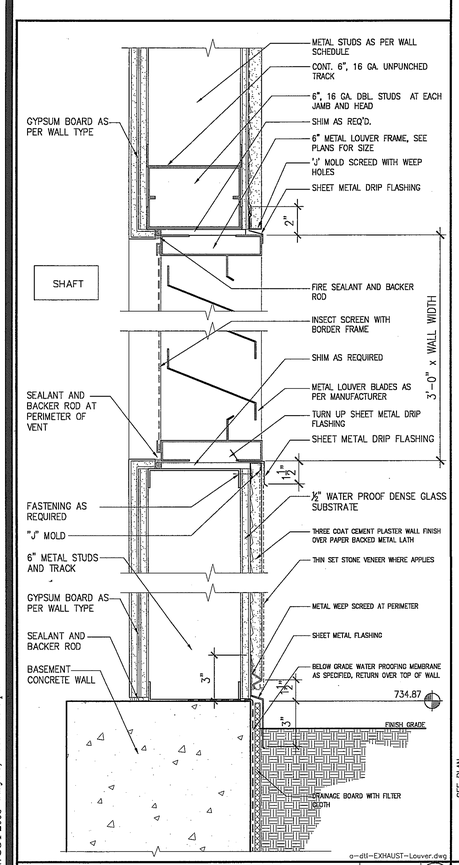

g-dtl-EXHAUST-Louver.dwg

GARAGE EXHAUST LOUVER

Scale 3" = 1'-0" | 17

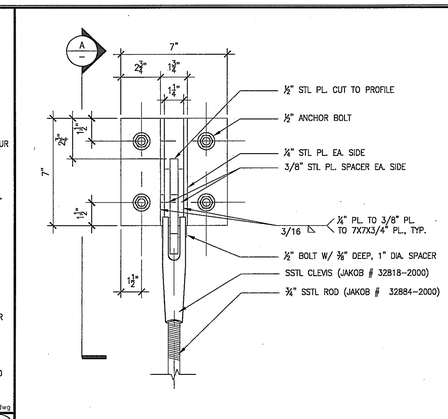

C. TYPICAL CANOPY WALL ELEVATION

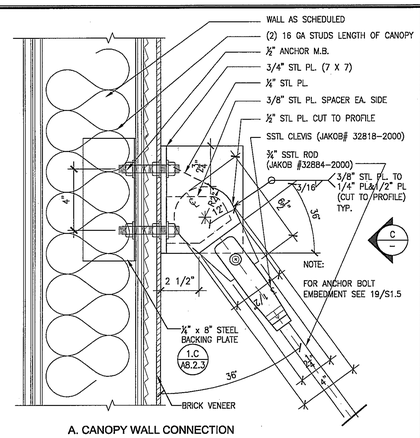

A. CANOPY WALL CONNECTION

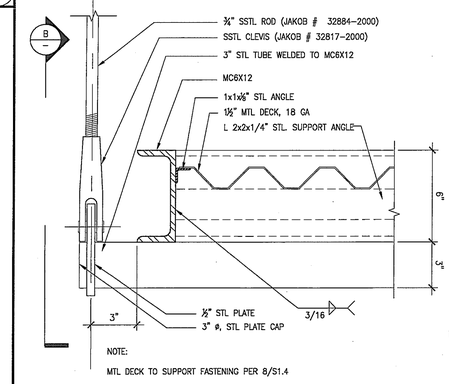

D. TYPICAL CANOPY RAKE EDGE

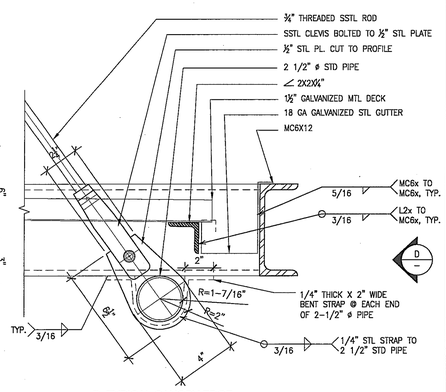

B. TYPICAL CANOPY EDGE

A-dt-canopy-dining.dwg

TYPICAL CANOPY DINING DETAILS

Scale 3" = 1'-0" | 7

NOT USED

Scale | 4

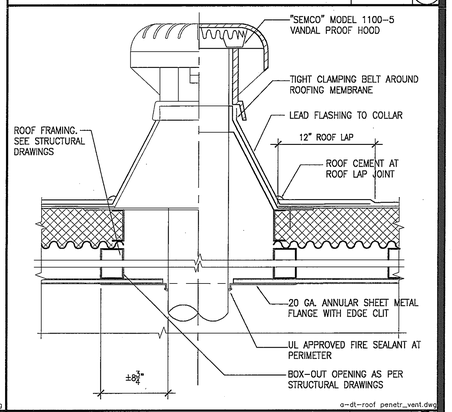

a-dt-roof penetr_vent.dwg

ROOF VENT PENETRATION DETAIL

Scale 1 1/2" = 1'-0" | 3

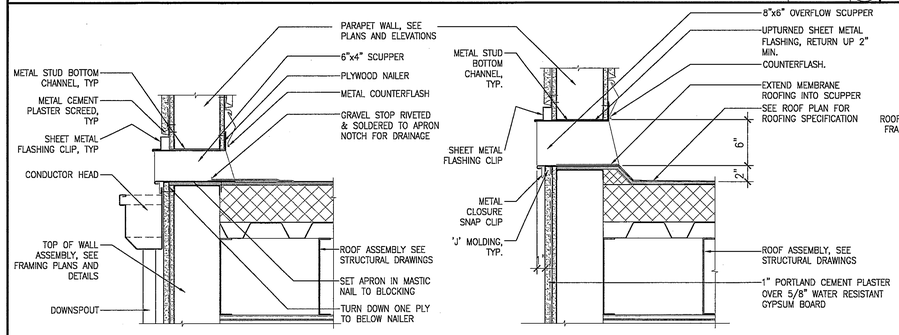

A. SCUPPER AT PARAPET

B. OVERFLOW AT PARAPET

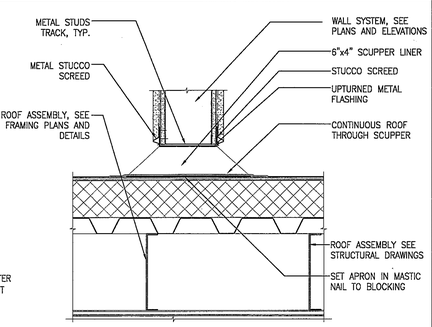

c. SCUPPER AT ROOF WALL

NOTES:
1. SCUPPER, CLOSURE FLANGES (BOTH FRONT AND REAR) AND GRAVEL STOP SHALL BE 20 G.I. SET IN EXTERIOR GRADE SEALANT

o-dt-dowspout_overflow.dwg

ROOF SCUPPER

Scale 1 1/2" = 1'-0" | 2

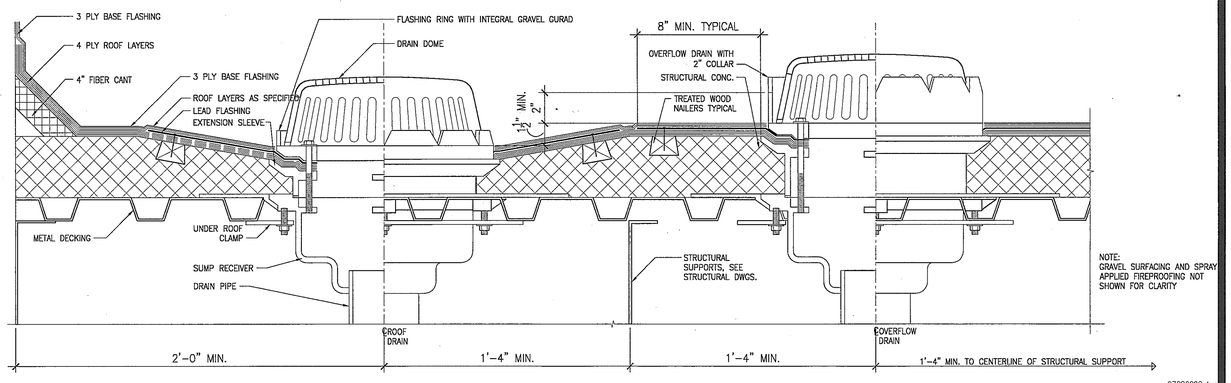

07220002.dwg

ROOF AND OVERFLOW DRAINS

Scale 3"=1'-0" | 1

WWC OT
Widom Wein Cohen O'Leary Terasawa

3130 Wilshire Boulevard
Sixth Floor
Santa Monica, California 90403
T (310) 828-0040
F (310) 453-9432
www.wwcot.com

Inland Empire
Palm Springs
Moorpark
Shanghai, China

RECEIVED
10:08 am, Aug 14, 2008
FRAMEMAX

Building Department Submittal: June 1, 2007
Issued For Bid:
Issued For Construction:



KEY PLAN

Project:
Jewish Home for The Aging
FOUNTAINVIEW AT EISENBERG VILLAGE
6440 Wilbur Ave
Reseda, CA. 91335

JEWISH HOME
JEWISH HOME FOR THE AGING
18855 Victory Blvd.
Reseda, CA 91335
Project Number: 04206.00

ROOF DETAILS

Date: 04/05/2007
Drawn By:
Checked By:

A6.5.2
Sheet No.

File Path & Name: F:\PROJECTS\04206-00\A-CD\SHEETS\A6.5.2.DWG
© WWCOT 2006 May 28, 2007 - 03:47 pm

RECEIVED BY SUFFOLK ON 06/01/07

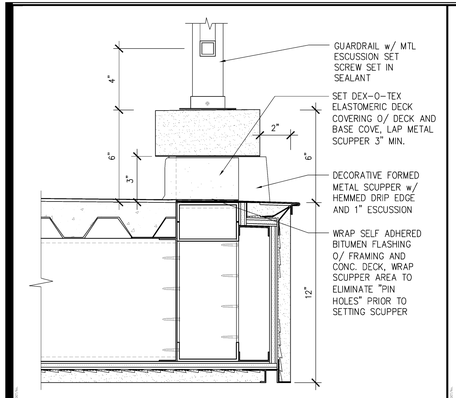

Scupper Section Detail — Scale 3" = 1'-0" — 20

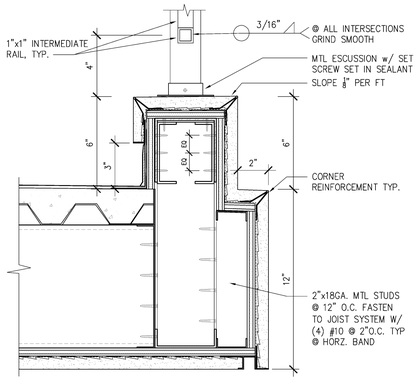

Balcony Profile Section Detail — Scale 3" = 1'-0" — 16

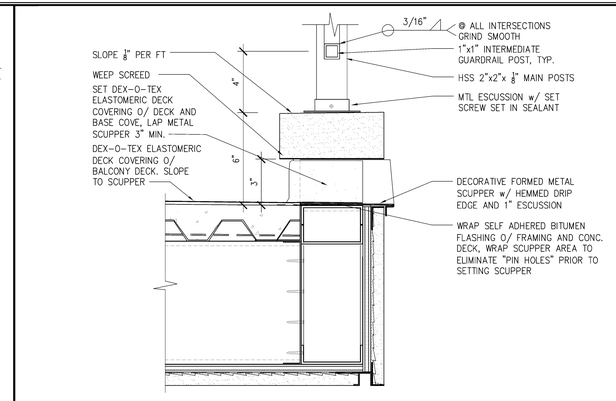

Balcony Profile Section Detail — Scale 3" = 1'-0" — 8

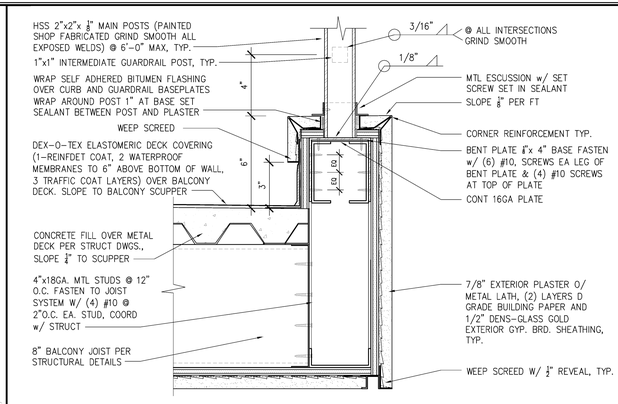

Balcony Profile Section Detail — Scale 3" = 1'-0" — 4

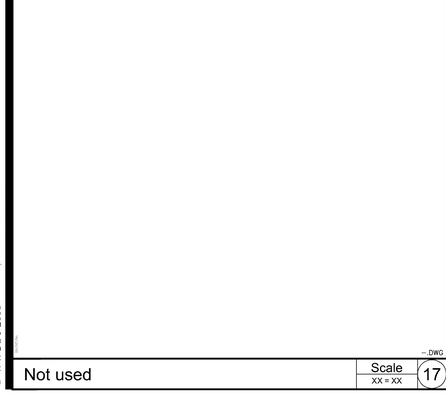

Scupper Plan Detail — Scale 3" = 1'-0" — 19

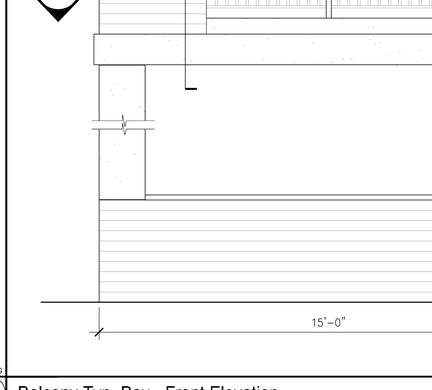

Balcony Profile Section Detail — Scale 3" = 1'-0" — 15

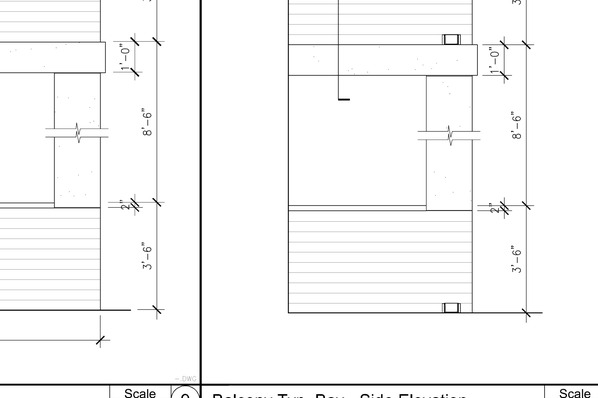

Balcony Corner Plan Detail — Scale 3" = 1'-0" — 7

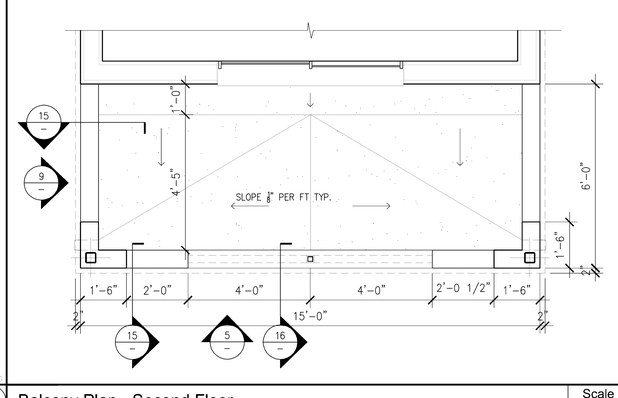

Balcony Plan & Elevations- Fourth Floor — Scale 1/2" = 1'-0" — 3

Not used — Scale 1 1/2" = 1'-0" — 18

Balcony Typ. Bay - Front Elevation — Scale X" = 1'-0" — 9

Balcony Typ. Bay - Side Elevation — Scale X" = 1'-0" — 5

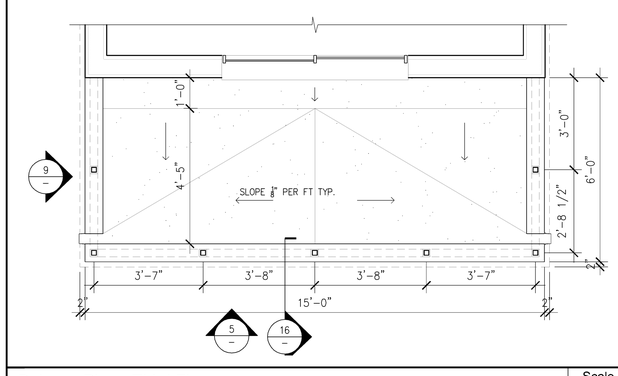

Balcony Plan - Third Floor — Scale 1/2" = 1'-0" — 2

Balcony Plan - Second Floor — Scale 1/2" = 1'-0" — 1



KEY PLAN

WWC OT
Widom Wein Cohen O'Leary Terasawa

3130 Wilshire Boulevard
Sixth Floor
Santa Monica, California 90403
T (310) 828-0040
F (310) 453-9432
www.wwcot.com

Inland Empire
Palm Springs
Moorpark
Shanghai, China

RECEIVED
10:08 am, Aug 14, 2008
FRAMEMAX

Building Department Submittal: June 1, 2007
Issued For Bid:
Issued For Construction: January 29, 2008

Project:
Jewish Home for The Aging
FOUNTAINVIEW AT EISENBERG VILLAGE
6440 Wilbur Ave
Reseda, CA. 91335

JEWISH HOME
JEWISH HOME FOR THE AGING
18855 Victory Blvd.
Reseda, CA 91335

Project Number: 04206.00

BALCONY DETAILS

Date: 01/21/2008
Drawn By:
Checked By:

A6.5.3
Sheet No.

File Path & Name: F:\PROJECTS\04206-00\A-CD\SHEETS\A6.5.3.DWG
© WWCOT 2006 Feb 07, 2008 - 10:51 am

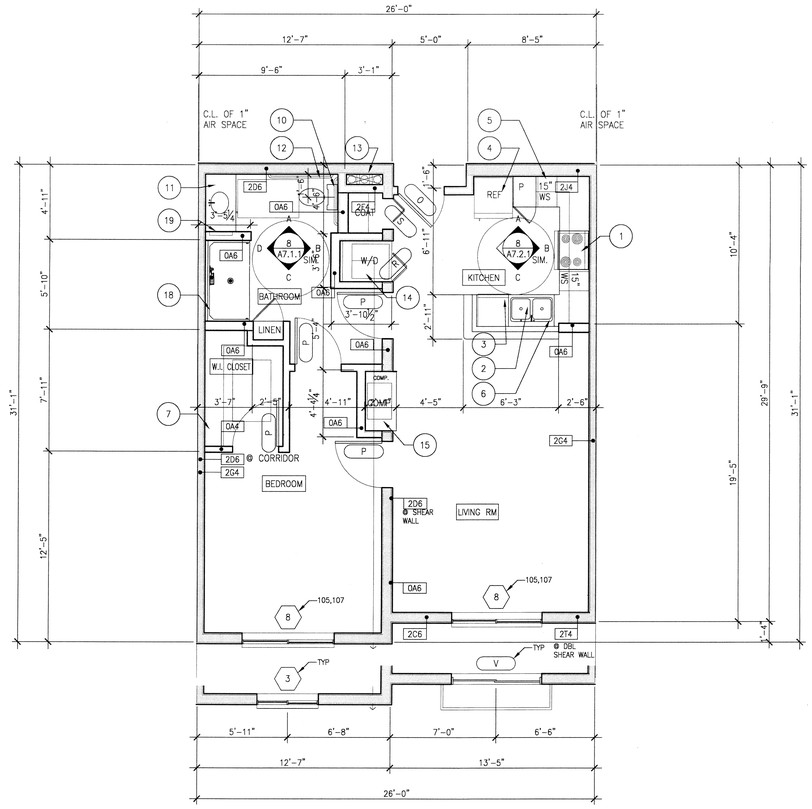

Enlarged Unit Plan-1BJ-A — Scale 1/4" = 1'-0" — 15

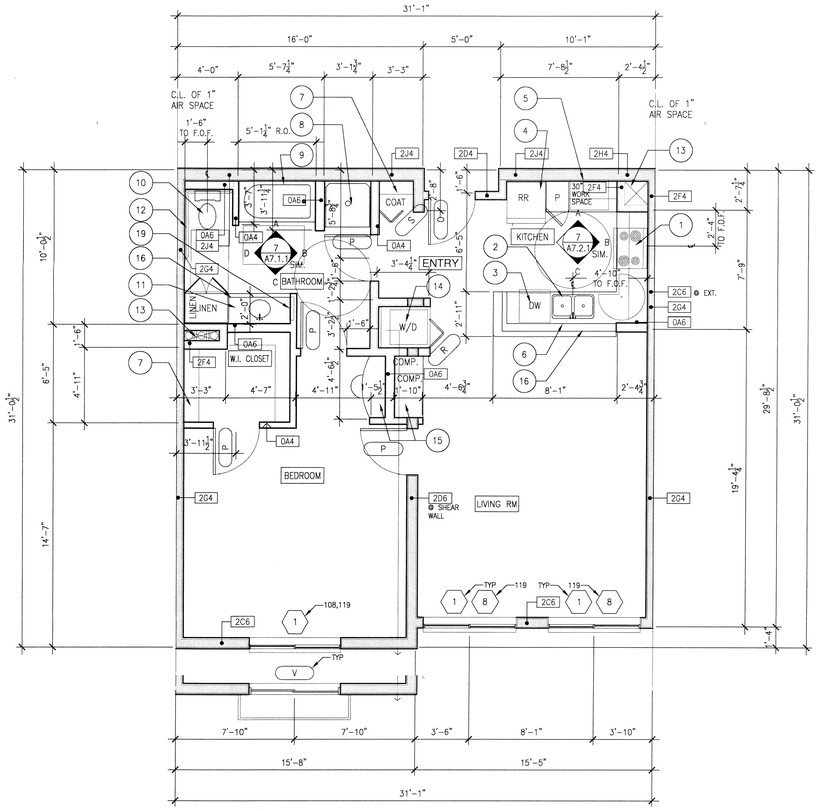

Enlarged Unit Plan-1B-A — Scale 1/4" = 1'-0" — 7

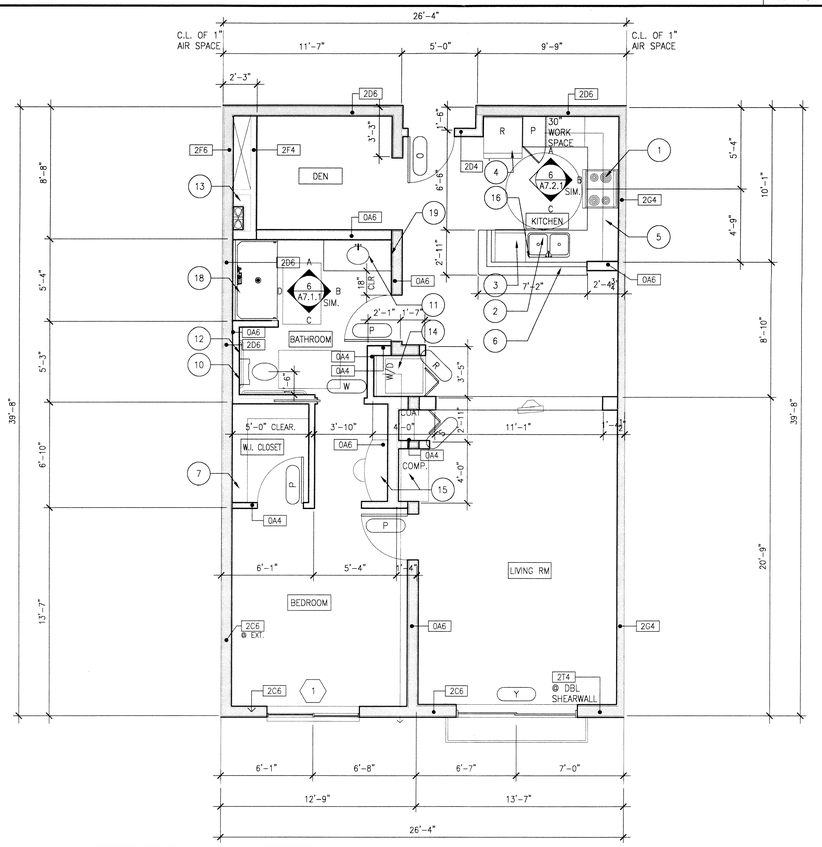

Enlarged Unit Plan-1BJ-B+DEN — Scale 1/4" = 1'-0" — 13

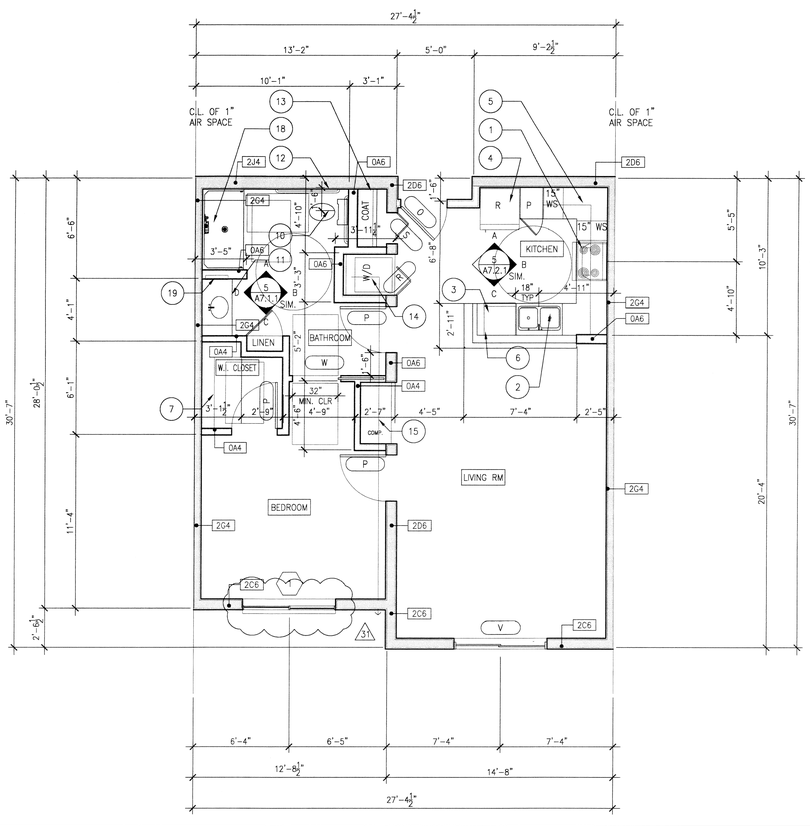

Enlarged Unit Plan-1BJ-C — Scale 1/4" = 1'-0" — 5

KEY NOTES — Scale 2

1. ALL DIMENSIONS ARE SHOWN TO FACE OF STUD OR FACE OF FRAMING. ALL STUDS ARE 4" DEEP IN NON-BEARING WALLS AND 6" DEEP IN BEARING WALLS.
2. ALL EXTERIOR WALLS, CORRIDOR WALLS, UNIT SEPARATION WALLS, AND INTERIOR BEARING WALLS TO BE OF 2-HOUR FIRE-RESISTIVE CONSTRUCTION.
3. ALL SHAFT WALLS TO BE OF 2-HOUR FIRE-RESISTIVE CONSTRUCTION.
4. SOLID JOINT TO BE USED AT ALL BATHTUB TRAP. (P.C. 405.2)
5. REFER TO SHEET A8.2.1 & A8.2.2 FOR WALL TYPE SCHEDULE
6. REFER TO SHEET A8.01 FOR DOOR SCHEDULE
7. REFER TO SHEET A8.03 FOR WINDOW SCHEDULE
8. REFER TO SHEET G0.05 FOR FIXTURE MOUNTING HEIGHTS AND CLEARANCES.

gen_notes_enlarged.dwg

GENERAL PLAN NOTES — Scale 1

1. 30" COUNTERTOP ELECTRICAL RANGE AS SPECIFIED WITH HOOD ABOVE
2. DOUBLE SINK WITH GARBAGE DISPOSAL AS SPECIFIED. PROVIDE ELECTRICAL AS NECESSARY. SEE ELECTRICAL DRAWINGS
3. UNDER-COUNTER DISHWASHER AS SPECIFIED
4. REFRIGERATOR, PROVIDE SPACE AS REQUIRED FOR 2" TOLERANCE AROUND REFRIGERATOR.
5. UPPER AND LOWER MILLWORK CABINETRY, SEE INTERIOR ELEVATIONS AND MILLWORK DETAILS
6. 34" HIGH GRANITE BREAKFAST COUNTER. SEE INTERIOR ELEVATIONS
7. CLOSET WOOD SHELF AND POLE AT +6'-0" A.F.F.
8. ONE PIECE FIBERGLASS SHOWER ENCLOSURE AS SPECIFIED, SEE PLUMBING PLANS FOR PLUMBING INFORMATION. INSTALL AS PER MANUFACTURER INSTRUCTIONS.
9. 5' TUB AS SPECIFIED. 60"X33" ROUGH OPENING REQUIRED. SEE INTERIOR ELEVATIONS AND PLUMBING PLANS FOR PLUMBING INFORMATION
10. WATER SAVER TOILET AS SPECIFIED, SEE PLUMBING DRAWINGS FOR ADDITIONAL INFORMATION
11. COUNTERTOP LAVATORY AS SPECIFIED, SEE PLUMBING DRAWINGS FOR ADDITIONAL INFORMATION
12. WALL MOUNTED GRAB BAR, SEE DETAIL 11/G0.05
13. MECHANICAL 2 HOUR RATED SHAFT
14. STACKED WASHER AND ELECTRICAL DRYER COMBO WITH CHASE VENT TO OUTSIDE AIR, SEE MECHANICAL DRAWINGS FOR ADDITIONAL INFORMATION
15. BUILT-IN DESK/MILLWORK, SEE INTERIOR ELEVATIONS AND MILLWORK DETAILS
16. LINE OF CABINET BELOW
17. ~~ONE PIECE FIBERGLASS TUB/SHOWER COMBINATION, 60"X33" ROUGH OPENING REQUIRED. SEE PLUMBING DRAWINGS FOR ADDITIONAL INFORMATION.~~
18. ONE PIECE FIBERGLASS ROLL IN SHOWER. 63"X34" ROUGH OPENING REQUIRED. ALL BATHROOM ACCESSIBLE UNITS HAVE PROVISIONS FOR GRAB BARS.
19. MEDICINE CABINET WITH FRAMELESS MIRROR DOOR

WWC OT
Widom Wein Cohen O'Leary Terasawa
3130 Wilshire Boulevard
Sixth Floor
Santa Monica, California 90403
T (310) 828-0040
F (310) 453-9432
www.wwcot.com
Inland Empire
Palm Springs
Moorpark
Shanghai, China

RECEIVED AUG 21 2008 FIREMAN'S FUND CONSTRUCTION

Building Department Submittal: June 1, 2007
Issued For Bid:
Issued For Construction: January 29, 2008

1 08-18-2008 EXHAUST & WINDOW/DOOR COORDINATION

RECEIVED AUG 19 2008 SUFFOLK CONSTRUCTION

RECEIVED AUG 21 2008 FIREMAN'S FUND CONSTRUCTION

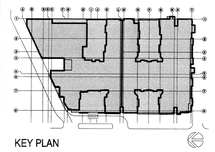

KEY PLAN

Project:
Jewish Home for The Aging
FOUNTAINVIEW AT EISENBERG VILLAGE
6440 Wilbur Ave
Reseda, CA. 91335

JEWISH HOME
JEWISH HOME FOR THE AGING
18855 Victory Blvd.
Reseda, CA 91335
Project Number: 04206.00

ENLARGED UNIT PLANS

Date: 01/21/2008
Drawn By:
Checked By:

A7.0.1
Sheet No.

File Path & Name: F:\PROJECTS\04206-00\A-CD\SHEETS\A7.0.1.DWG
© WWCOT 2006 Aug 18, 2008 - 04:12 pm

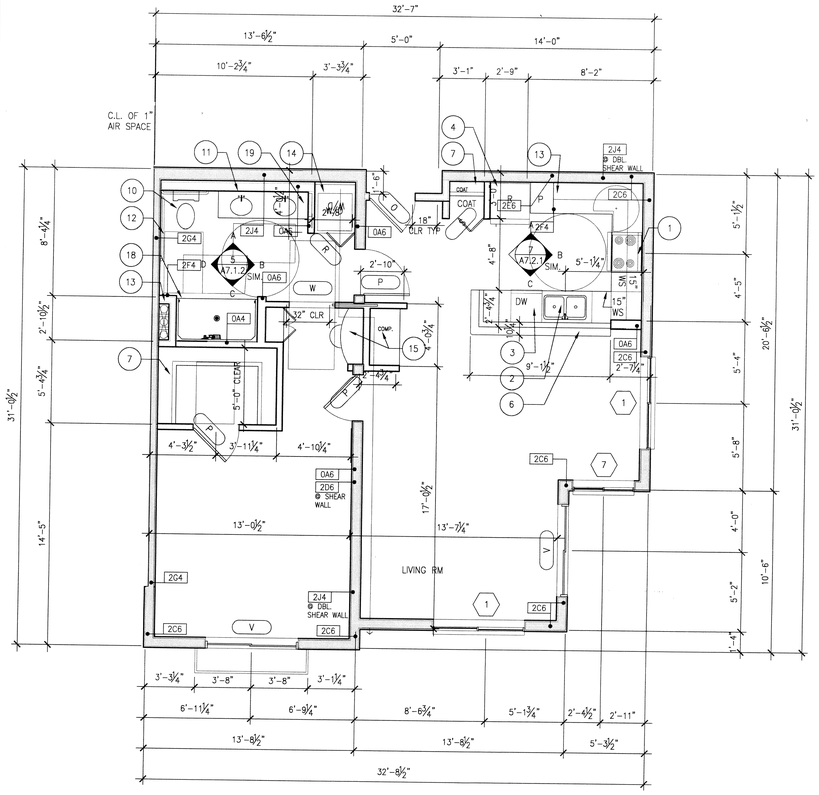

Enlarged Unit Plan-1B-C — Scale 1/4" = 1'-0" — 15

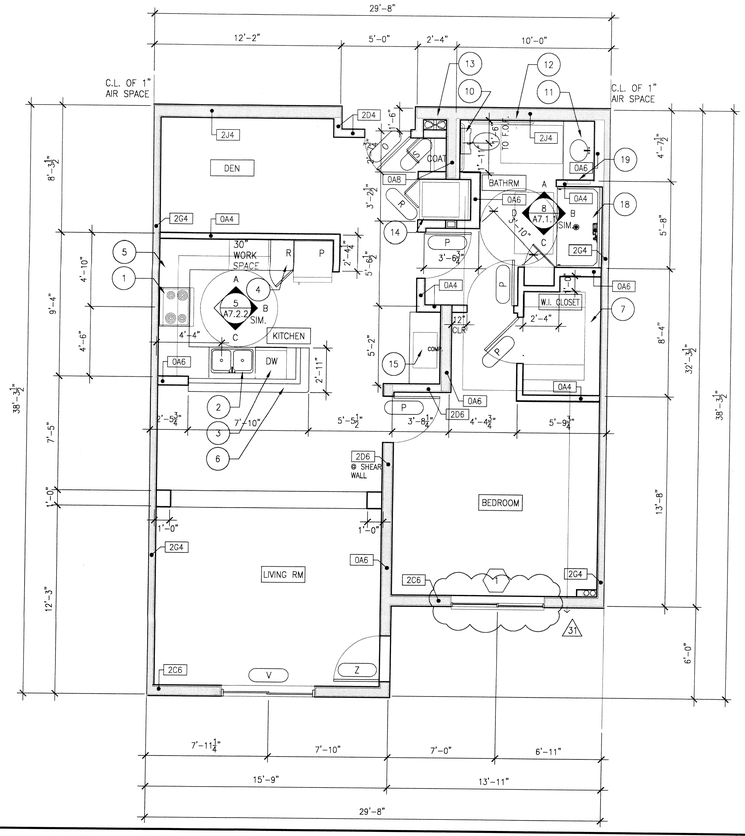

Enlarged Unit Plans - 1B-E — Scale 1/4" = 1'-0" — 7

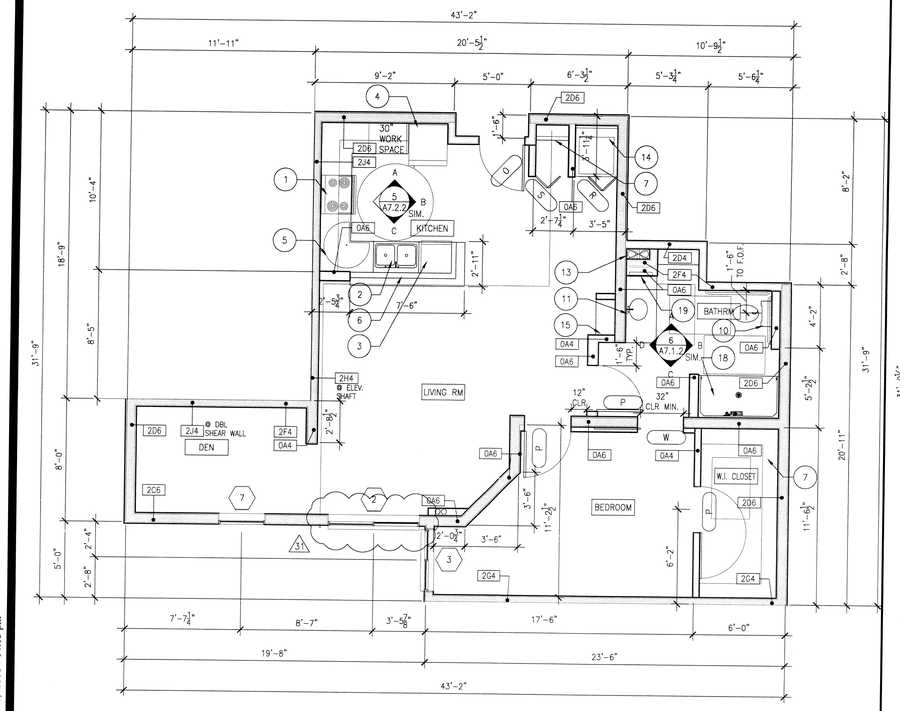

Enlarged Unit Plan-1B-D — Scale 1/4" = 1'-0" — 13

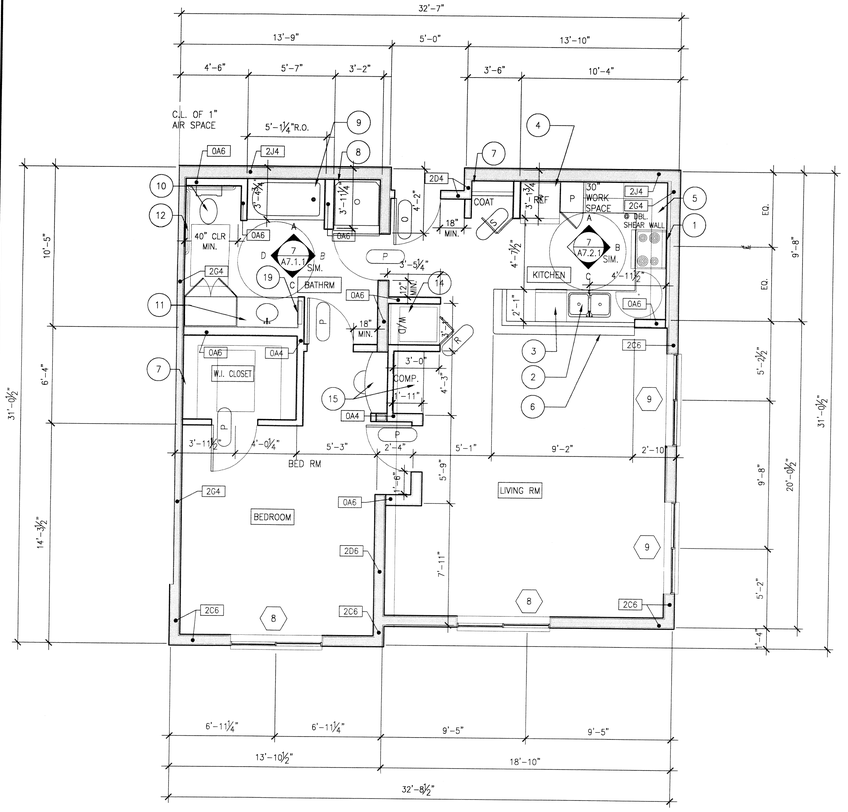

Enlarged Unit Plan - 1B-B — Scale 1/4" = 1'-0" — 5

1. 30" COUNTERTOP ELECTRICAL RANGE AS SPECIFIED WITH HOOD ABOVE
2. DOUBLE SINK WITH GARBAGE DISPOSAL AS SPECIFIED. PROVIDE ELECTRICAL AS NECESSARY. SEE ELECTRICAL DRAWINGS
3. UNDER-COUNTER DISHWASHER AS SPECIFIED
4. REFRIGERATOR, PROVIDE SPACE AS REQUIRED FOR 2" TOLERANCE AROUND REFRIGERATOR.
5. UPPER AND LOWER MILLWORK CABINETRY, SEE INTERIOR ELEVATIONS AND MILLWORK DETAILS
6. 34" HIGH GRANITE BREAKFAST COUNTER. SEE INTERIOR ELEVATIONS
7. CLOSET WOOD SHELF AND POLE AT +6'-0" A.F.F.
8. ONE PIECE FIBERGLASS SHOWER ENCLOSURE AS SPECIFIED, SEE PLUMBING PLANS FOR PLUMBING INFORMATION. INSTALL AS PER MANUFACTURER INSTRUCTIONS.
9. 5' TUB AS SPECIFIED. 60"X33" ROUGH OPENING REQUIRED. SEE INTERIOR ELEVATIONS AND PLUMBING PLANS FOR PLUMBING INFORMATION
10. WATER SAVER TOILET AS SPECIFIED, SEE PLUMBING DRAWINGS FOR ADDITIONAL INFORMATION
11. COUNTERTOP LAVATORY AS SPECIFIED, SEE PLUMBING DRAWINGS FOR ADDITIONAL INFORMATION
12. WALL MOUNTED GRAB BAR, SEE DETAIL 11/G0.05
13. MECHANICAL 2 HOUR RATED SHAFT
14. STACKED WASHER AND ELECTRICAL DRYER COMBO WITH CHASE VENT TO OUTSIDE AIR, SEE MECHANICAL DRAWINGS FOR ADDITIONAL INFORMATION
15. BUILT-IN DESK/MILLWORK, SEE INTERIOR ELEVATIONS AND MILLWORK DETAILS
16. LINE OF CABINET BELOW
17. ONE PIECE FIBERGLASS TUB/SHOWER COMBINATION, 60"X33" ROUGH OPENING REQUIRED. SEE PLUMBING DRAWINGS FOR ADDITIONAL INFORMATION.
18. ONE PIECE FIBERGLASS ROLL IN SHOWER. 63"X34" ROUGH OPENING REQUIRED. ALL BATHROOM ACCESSIBLE UNITS HAVE PROVISIONS FOR GRAB BARS.
19. MEDICINE CABINET WITH FRAMELESS MIRROR DOOR

KEY NOTES — Scale 2

1. ALL DIMENSIONS ARE SHOWN TO FACE OF STUD OR FACE OF FRAMING. ALL STUDS ARE 4" DEEP IN NON-BEARING WALLS AND 6" DEEP IN BEARING WALLS.
2. ALL EXTERIOR WALLS, CORRIDOR WALLS, UNIT SEPARATION WALLS, AND INTERIOR BEARING WALLS TO BE OF 2-HOUR FIRE-RESISTIVE CONSTRUCTION.
3. ALL SHAFT WALLS TO BE OF 2-HOUR FIRE-RESISTIVE CONSTRUCTION.
4. SOLID JOINT TO BE USED AT ALL BATHTUB TRAP. (P.C. 405.2)
5. REFER TO SHEET A8.2.1 & A8.2.2 FOR WALL TYPE SCHEDULE
6. REFER TO SHEET A8.01 FOR DOOR SCHEDULE
7. REFER TO SHEET A8.03 FOR WINDOW SCHEDULE
8. REFER TO SHEET G0.05 FOR FIXTURE MOUNTING HEIGHTS AND CLEARANCES.

GENERAL PLAN NOTES — Scale 1

WWC OT
Widom Wein Cohen O'Leary Terasawa

3130 Wilshire Boulevard
Sixth Floor
Santa Monica, California 90403
T (310) 828-0040
F (310) 453-9432
www.wwcot.com

Inland Empire
Palm Springs
Moorpark
Shanghai, China

Building Department Submittal: June 1, 2007
Issued For Bid:
Issued For Construction: January 29, 2008

31 08-18-2008 EXHAUST & WINDOW/DOOR COORDINATION

RECEIVED AUG 19 2008 SUFFOLK CONSTRUCTION

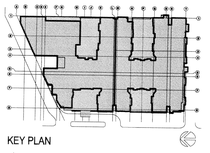

KEY PLAN

RECEIVED AUG 19 2008 SUFFOLK CONSTRUCTION

Project:
Jewish Home for The Aging
FOUNTAINVIEW AT EISENBERG VILLAGE

6440 Wilbur Ave
Reseda, CA. 91335

JEWISH HOME

JEWISH HOME FOR THE AGING
18855 Victory Blvd.
Reseda, CA 91335

Project Number: 04206.00

ENLARGED UNIT PLANS

Date: 01/21/2008
Drawn By:
Checked By:

A7.0.2
Sheet No.

File Path & Name: F:\PROJECTS\04206-00\A-CD\SHEETS\A7.0.2.DWG
© WWCOT 2006 Aug 18, 2008 - 04:13 pm

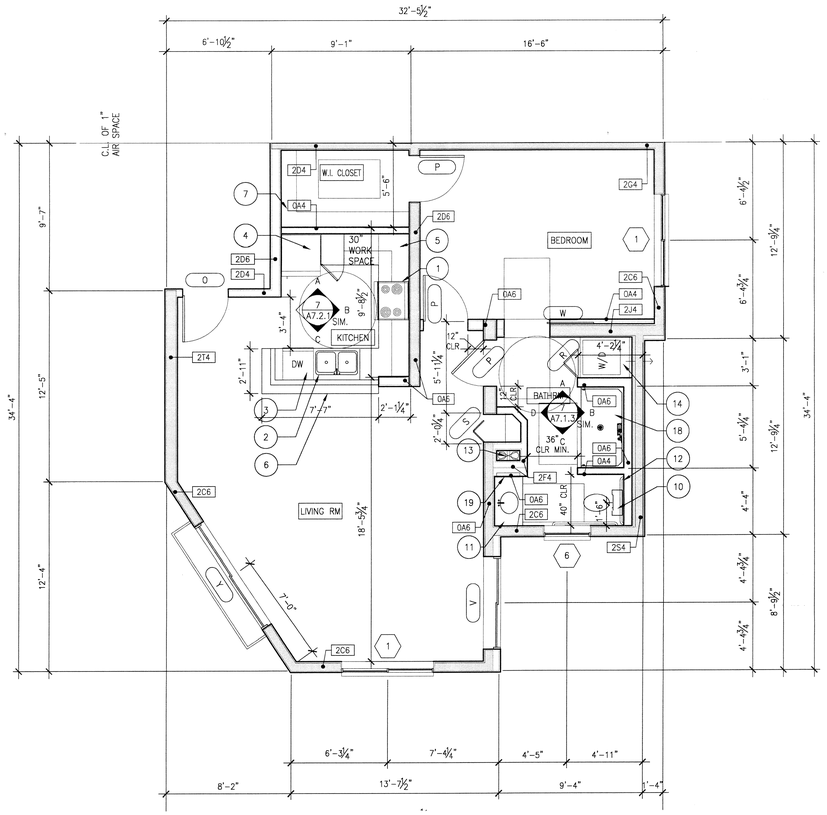

Enlarged Unit Plan 1B-G — Scale 1/4" = 1'-0" — 15

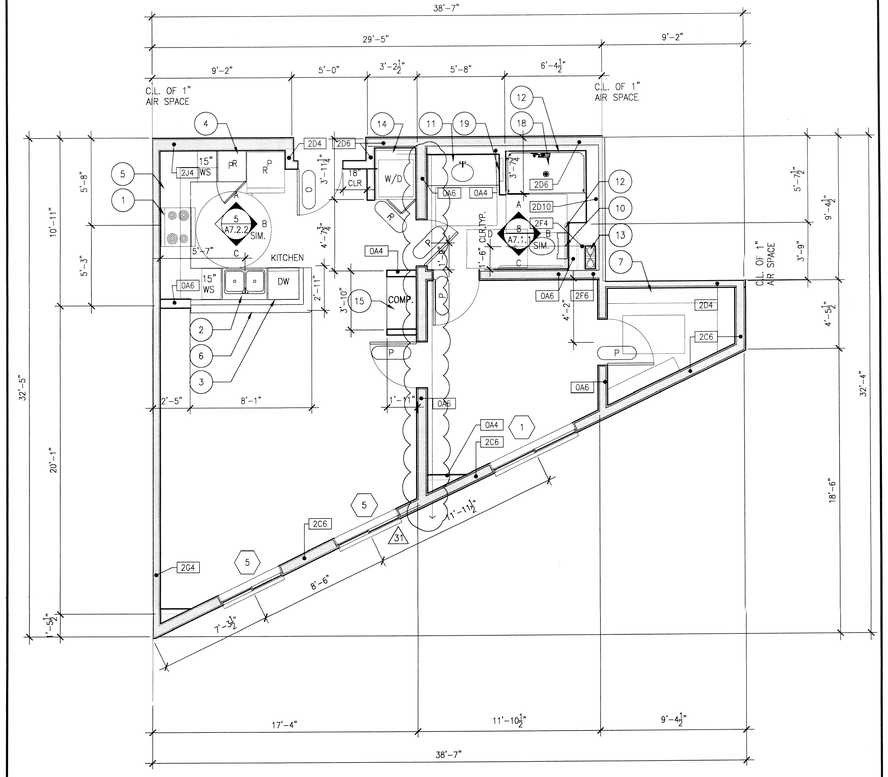

Enlarged Unit Plan - 1B-F — Scale 1/4" = 1'-0" — 7

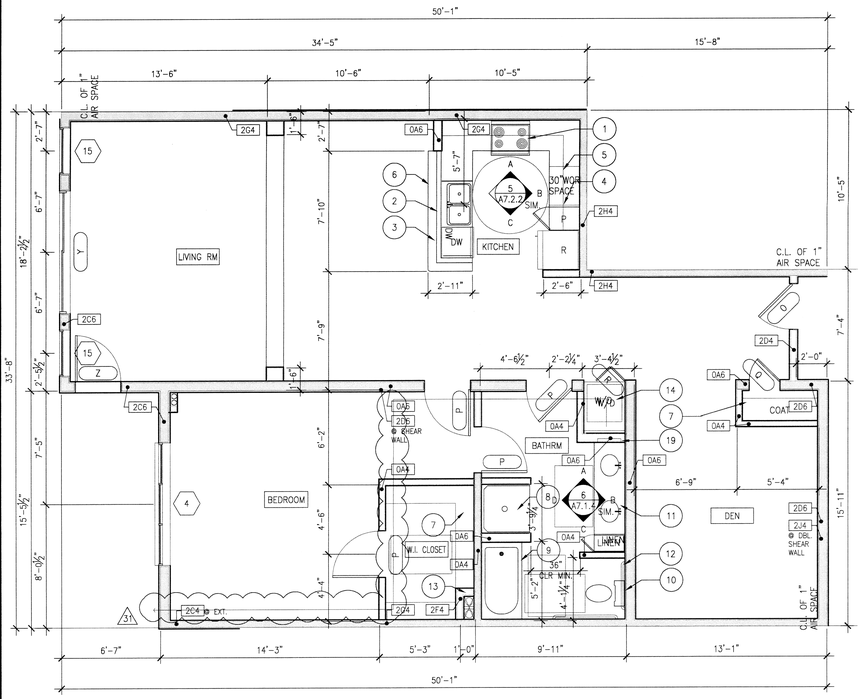

Enlarged Unit Plan 1B-H — Scale 1/4" = 1'-0" — 13

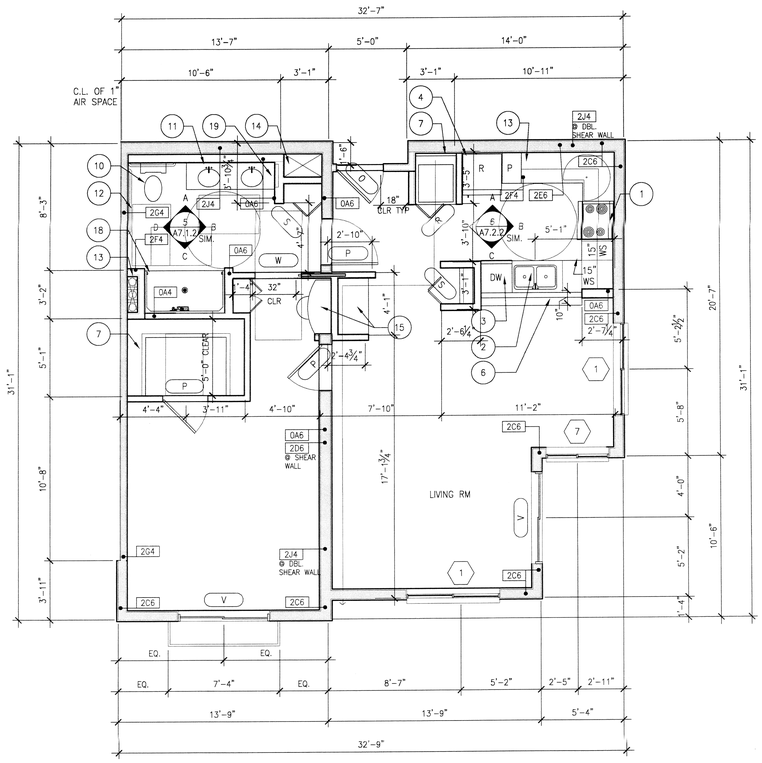

Enlarged Unit Plan-1B-CW — Scale 1/4" = 1'-0" — 5

1. 30" COUNTERTOP ELECTRICAL RANGE AS SPECIFIED WITH HOOD ABOVE
2. DOUBLE SINK WITH GARBAGE DISPOSAL AS SPECIFIED. PROVIDE ELECTRICAL AS NECESSARY. SEE ELECTRICAL DRAWINGS
3. UNDER-COUNTER DISHWASHER AS SPECIFIED
4. REFRIGERATOR, PROVIDE SPACE AS REQUIRED FOR 2" TOLERANCE AROUND REFRIGERATOR.
5. UPPER AND LOWER MILLWORK CABINETRY, SEE INTERIOR ELEVATIONS AND MILLWORK DETAILS
6. 34" HIGH GRANITE BREAKFAST COUNTER. SEE INTERIOR ELEVATIONS
7. CLOSET WOOD SHELF AND POLE AT +6'-0" A.F.F.
8. ONE PIECE FIBERGLASS SHOWER ENCLOSURE AS SPECIFIED, SEE PLUMBING PLANS FOR PLUMBING INFORMATION. INSTALL AS PER MANUFACTURER INSTRUCTIONS.
9. 5' TUB AS SPECIFIED. 60"X33" ROUGH OPENING REQUIRED. SEE INTERIOR ELEVATIONS AND PLUMBING PLANS FOR PLUMBING INFORMATION
10. WATER SAVER TOILET AS SPECIFIED, SEE PLUMBING DRAWINGS FOR ADDITIONAL INFORMATION
11. COUNTERTOP LAVATORY AS SPECIFIED, SEE PLUMBING DRAWINGS FOR ADDITIONAL INFORMATION
12. WALL MOUNTED GRAB BAR, SEE DETAIL 11/G0.05
13. MECHANICAL 2 HOUR RATED SHAFT
14. STACKED WASHER AND ELECTRICAL DRYER COMBO WITH CHASE VENT TO OUTSIDE AIR, SEE MECHANICAL DRAWINGS FOR ADDITIONAL INFORMATION
15. BUILT-IN DESK/MILLWORK, SEE INTERIOR ELEVATIONS AND MILLWORK DETAILS
16. LINE OF CABINET BELOW
17. ONE PIECE FIBERGLASS TUB/SHOWER COMBINATION, 60"X33" ROUGH OPENING REQUIRED. SEE PLUMBING DRAWINGS FOR ADDITIONAL INFORMATION.
18. ONE PIECE FIBERGLASS ROLL IN SHOWER. 63"X34" ROUGH OPENING REQUIRED. ALL BATHROOM ACCESSIBLE UNITS HAVE PROVISIONS FOR GRAB BARS.
19. MEDICINE CABINET WITH FRAMELESS MIRROR DOOR

KEY NOTES — Scale 2

1. ALL DIMENSIONS ARE SHOWN TO FACE OF STUD OR FACE OF FRAMING. ALL STUDS ARE 4" DEEP IN NON-BEARING WALLS AND 6" DEEP IN BEARING WALLS.
2. ALL EXTERIOR WALLS, CORRIDOR WALLS, UNIT SEPARATION WALLS, AND INTERIOR BEARING WALLS TO BE OF 2-HOUR FIRE-RESISTIVE CONSTRUCTION.
3. ALL SHAFT WALLS TO BE OF 2-HOUR FIRE-RESISTIVE CONSTRUCTION.
4. SOLID JOINT TO BE USED AT ALL BATHTUB TRAP. (P.C. 405.2)
5. REFER TO SHEET A8.2.1 & A8.2.2 FOR WALL TYPE SCHEDULE
6. REFER TO SHEET A8.01 FOR DOOR SCHEDULE
7. REFER TO SHEET A8.03 FOR WINDOW SCHEDULE
8. REFER TO SHEET G0.05 FOR FIXTURE MOUNTING HEIGHTS AND CLEARANCES.

GENERAL PLAN NOTES — Scale 1

WWC OT
Widom Wein Cohen O'Leary Terasawa
3130 Wilshire Boulevard
Sixth Floor
Santa Monica, California 90403
T (310) 828-0040
F (310) 453-9432
www.wwcot.com
Inland Empire
Palm Springs
Moorpark
Shanghai, China

Building Department Submittal: June 1, 2007
Issued For Bid: ——
Issued For Construction: January 29, 2008

△3 08-18-2008 EXHAUST & WINDOW/DOOR COORDINATION

RECEIVED
AUG 19 2008
SUFFOLK CONSTRUCTION

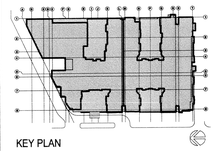

KEY PLAN

△ ——
△ ——
△ ——

RECEIVED
AUG 19 2008
SUFFOLK CONSTRUCTION

Project:
Jewish Home for The Aging
FOUNTAINVIEW AT EISENBERG VILLAGE
6440 Wilbur Ave
Reseda, CA. 91335

JEWISH HOME
JEWISH HOME FOR THE AGING
18855 Victory Blvd.
Reseda, CA 91335
Project Number: 04206.00

ENLARGED UNIT PLANS

Date: 01/21/2008
Drawn By: ——
Checked By: ——

A7.0.3
Sheet No.

File Path & Name: F:\PROJECTS\04206-00\A-CD\SHEETS\A7.0.3.DWG
© WWCOT 2006 Aug 18, 2008 - 04:16 pm

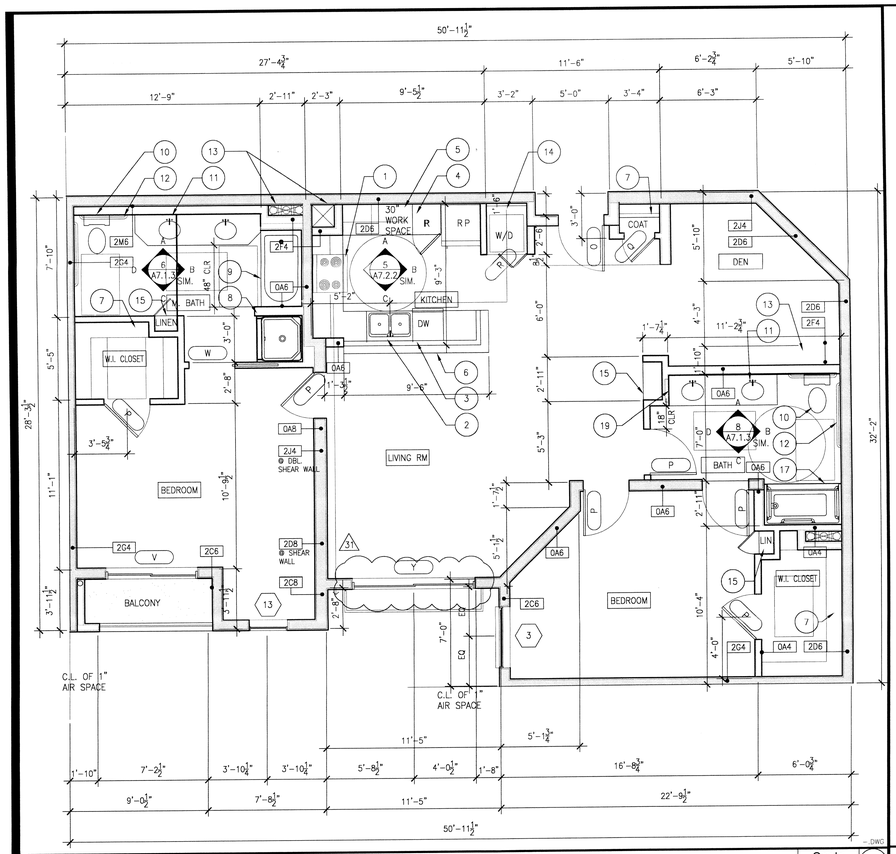

Enlarged Unit Plan 2B-A — Scale 1/4" = 1'-0" — 15

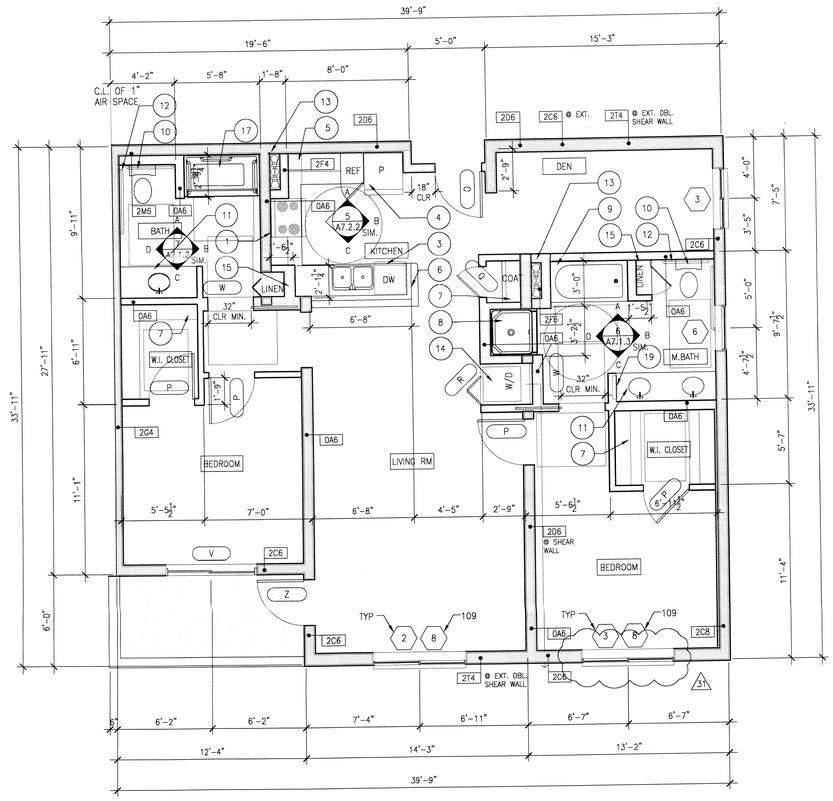

Enlarged Unit Plan - 2B-C-1 — Scale 1/4" = 1'-0" — 7

1. 30" COUNTERTOP ELECTRICAL RANGE AS SPECIFIED WITH HOOD ABOVE
2. DOUBLE SINK WITH GARBAGE DISPOSAL AS SPECIFIED. PROVIDE ELECTRICAL AS NECESSARY. SEE ELECTRICAL DRAWINGS
3. UNDER-COUNTER DISHWASHER AS SPECIFIED
4. REFRIGERATOR, PROVIDE SPACE AS REQUIRED FOR 2" TOLERANCE AROUND REFRIGERATOR.
5. UPPER AND LOWER MILLWORK CABINETRY, SEE INTERIOR ELEVATIONS AND MILLWORK DETAILS
6. 34" HIGH GRANITE BREAKFAST COUNTER. SEE INTERIOR ELEVATIONS
7. CLOSET WOOD SHELF AND POLE AT +6'-0" A.F.F.
8. ONE PIECE FIBERGLASS SHOWER ENCLOSURE AS SPECIFIED, SEE PLUMBING PLANS FOR PLUMBING INFORMATION. INSTALL AS PER MANUFACTURER INSTRUCTIONS.
9. 5' TUB AS SPECIFIED. 60"X33" ROUGH OPENING REQUIRED. SEE INTERIOR ELEVATIONS AND PLUMBING PLANS FOR PLUMBING INFORMATION
10. WATER SAVER TOILET AS SPECIFIED, SEE PLUMBING DRAWINGS FOR ADDITIONAL INFORMATION
11. COUNTERTOP LAVATORY AS SPECIFIED, SEE PLUMBING DRAWINGS FOR ADDITIONAL INFORMATION
12. WALL MOUNTED GRAB BAR, SEE DETAIL 11/G0.05
13. MECHANICAL 2 HOUR RATED SHAFT
14. STACKED WASHER AND ELECTRICAL DRYER COMBO WITH CHASE VENT TO OUTSIDE AIR, SEE MECHANICAL DRAWINGS FOR ADDITIONAL INFORMATION
15. BUILT-IN DESK/MILLWORK, SEE INTERIOR ELEVATIONS AND MILLWORK DETAILS
16. LINE OF CABINET BELOW
17. ONE PIECE FIBERGLASS TUB/SHOWER COMBINATION, 60"X33" ROUGH OPENING REQUIRED. SEE PLUMBING DRAWINGS FOR ADDITIONAL INFORMATION.
18. ONE PIECE FIBERGLASS ROLL IN SHOWER. 63"X34" ROUGH OPENING REQUIRED. ALL BATHROOM ACCESSIBLE UNITS HAVE PROVISIONS FOR GRAB BARS.
19. MEDICINE CABINET WITH FRAMELESS MIRROR DOOR

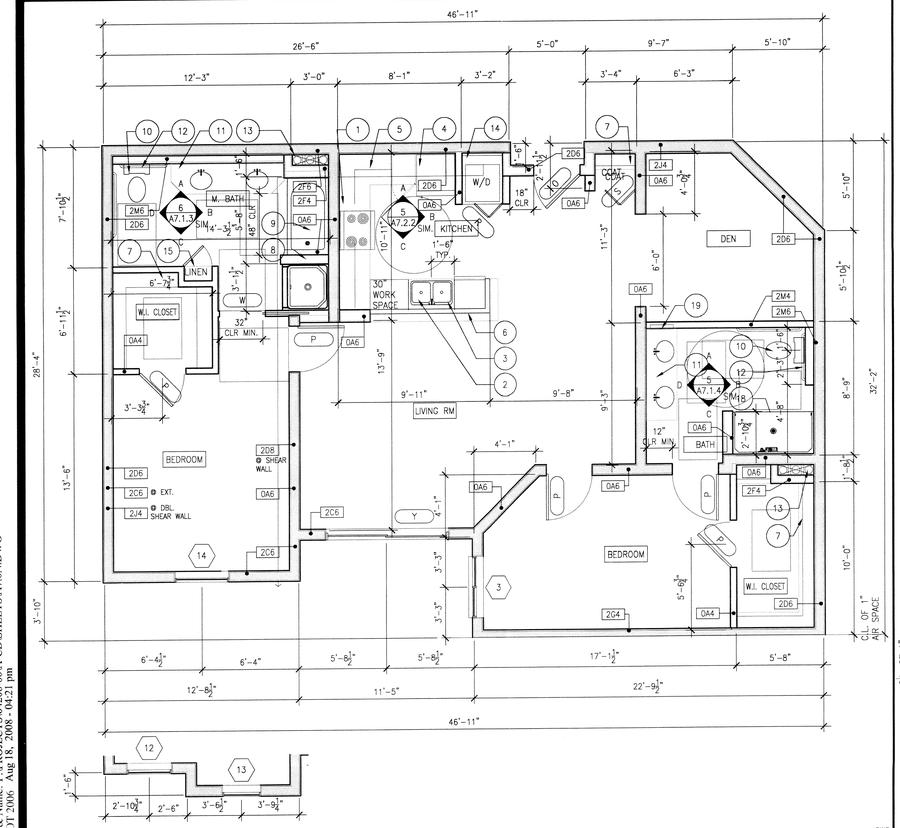

Enlarged Unit Plan 2B-B & 2B-B-1 — Scale 1/4" = 1'-0" — 13

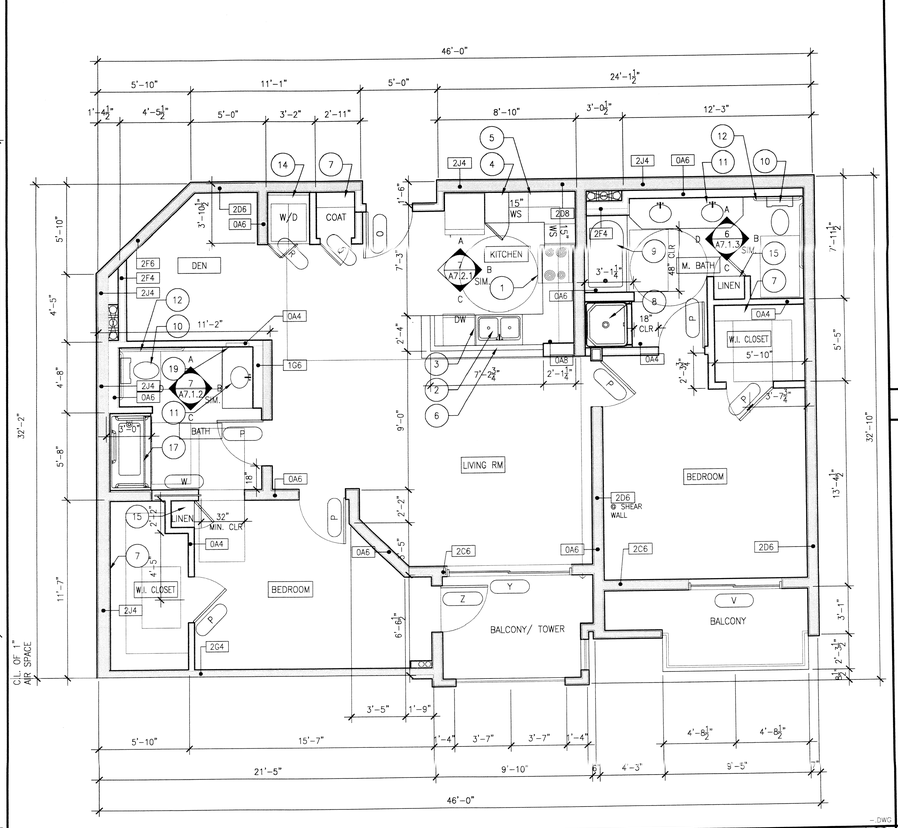

Enlarged Unit Plans- 2B-BTOWER — Scale 1/4" = 1'-0" — 5

KEY NOTES — Scale 2

1. ALL DIMENSIONS ARE SHOWN TO FACE OF STUD OR FACE OF FRAMING. ALL STUDS ARE 4" DEEP IN NON-BEARING WALLS AND 6" DEEP IN BEARING WALLS.
2. ALL EXTERIOR WALLS, CORRIDOR WALLS, UNIT SEPARATION WALLS, AND INTERIOR BEARING WALLS TO BE OF 2-HOUR FIRE-RESISTIVE CONSTRUCTION.
3. ALL SHAFT WALLS TO BE OF 2-HOUR FIRE-RESISTIVE CONSTRUCTION.
4. SOLID JOINT TO BE USED AT ALL BATHTUB TRAP. (P.C. 405.2)
5. REFER TO SHEET A8.2.1 & A8.2.2 FOR WALL TYPE SCHEDULE
6. REFER TO SHEET A8.01 FOR DOOR SCHEDULE
7. REFER TO SHEET A8.03 FOR WINDOW SCHEDULE
8. REFER TO SHEET G0.05 FOR FIXTURE MOUNTING HEIGHTS AND CLEARANCES.

GENERAL PLAN NOTES — Scale 1

WWC OT
Widom Wein Cohen O'Leary Terasawa

3130 Wilshire Boulevard
Sixth Floor
Santa Monica, California 90403
T (310) 828-0040
F (310) 453-9432
www.wwcot.com

Inland Empire
Palm Springs
Moorpark
Shanghai, China

Building Department Submittal:	June 1, 2007
Issued For Bid:	
Issued For Construction:	January 29, 2008

△31 08-18-2008 EXHAUST & WINDOW/DOOR COORDINATION

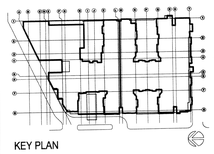

KEY PLAN

△ ——
△ ——
△ ——

RECEIVED
AUG 19 2008
SUFFOLK CONSTRUCTION

Project:
Jewish Home for The Aging
FOUNTAINVIEW AT EISENBERG VILLAGE
6440 Wilbur Ave
Reseda, CA. 91335

JEWISH HOME
JEWISH HOME FOR THE AGING
18855 Victory Blvd.
Reseda, CA 91335

Project Number: 04206.00

ENLARGED UNIT PLANS

Date: 01/21/2008
Drawn By: ——
Checked By: ——

A7.0.4
Sheet No.

File Path & Name: F:\PROJECTS\04206.00\A-CD\SHEETS\A7.0.4.DWG
© WWCOT 2006 Aug 18, 2008 - 04:21 pm

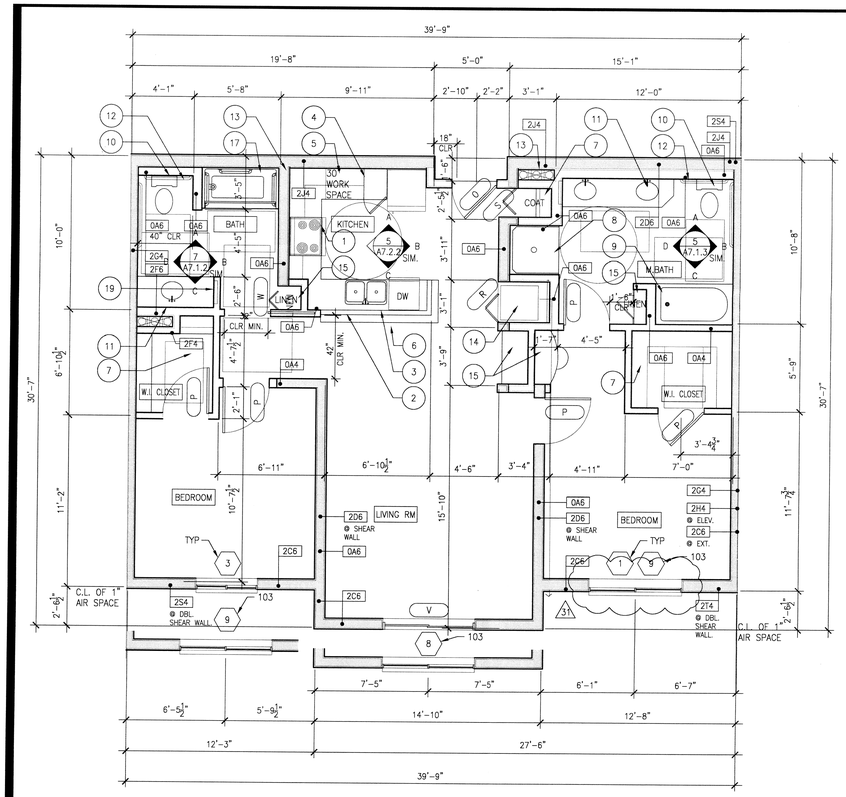

Enlarged Unit Plan 2B-C — Scale 1/4" = 1'-0" — 15

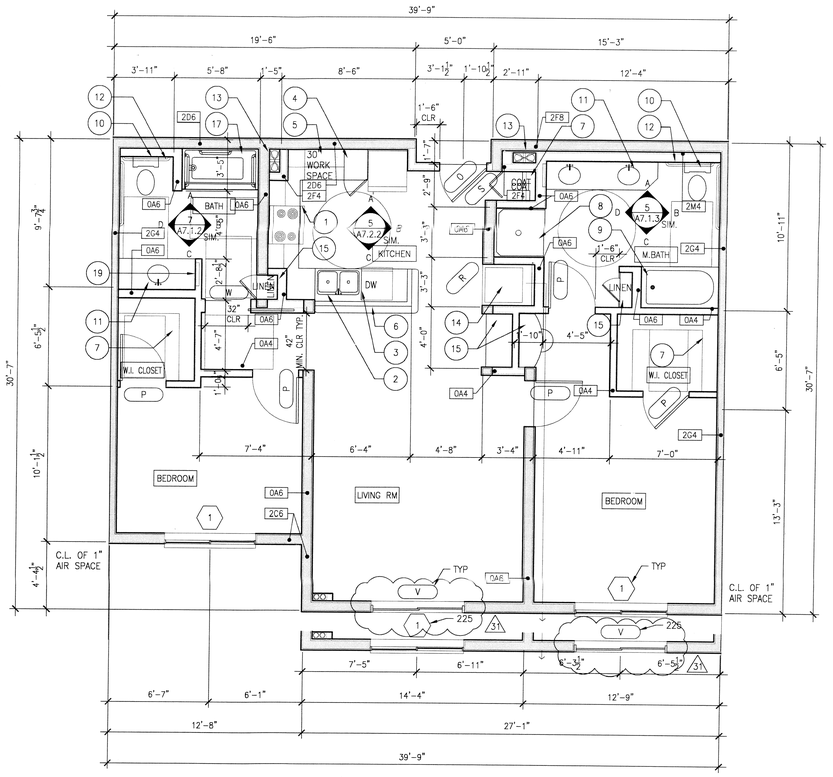

Enlarged Unit Plan - 2B-E — Scale 1/4" = 1'-0" — 7

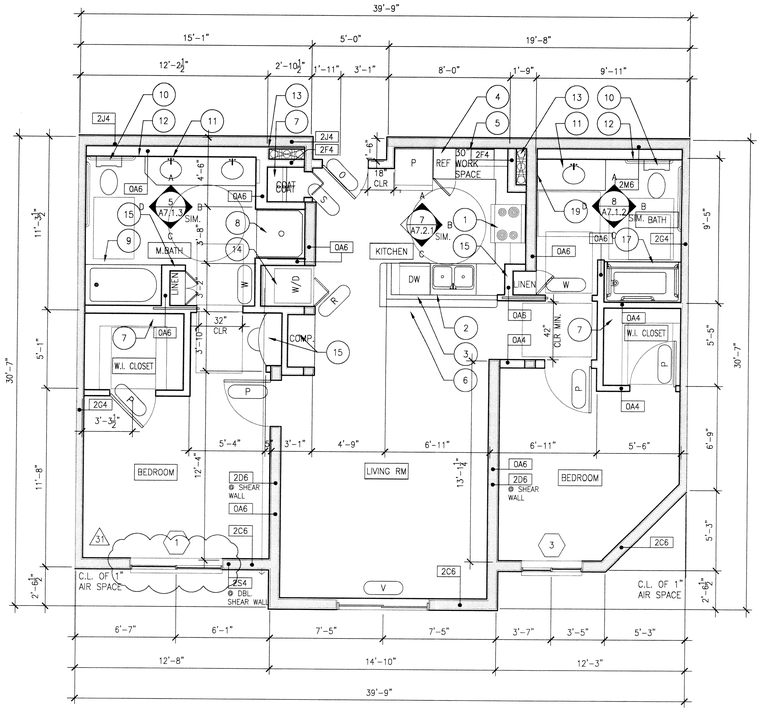

Enlarged Unit Plan 2B-D — Scale 1/4" = 1'-0" — 13

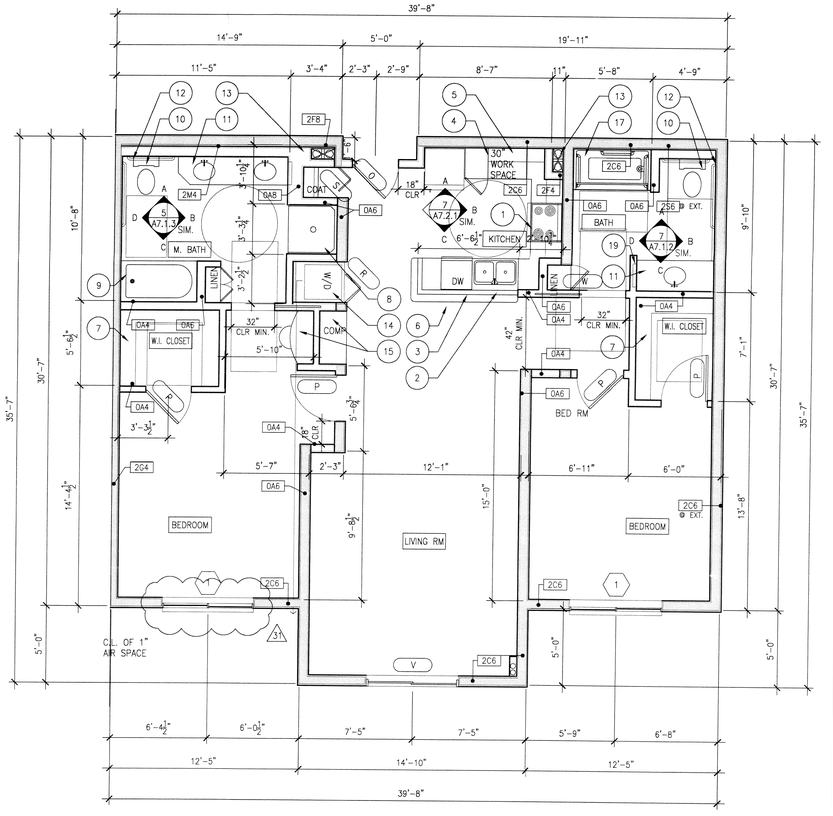

Enlarged Unit Plan-2B-F — Scale 1/4" = 1'-0" — 5

1. 30" COUNTERTOP ELECTRICAL RANGE AS SPECIFIED WITH HOOD ABOVE
2. DOUBLE SINK WITH GARBAGE DISPOSAL AS SPECIFIED. PROVIDE ELECTRICAL AS NECESSARY. SEE ELECTRICAL DRAWINGS
3. UNDER-COUNTER DISHWASHER AS SPECIFIED
4. REFRIGERATOR, PROVIDE SPACE AS REQUIRED FOR 2" TOLERANCE AROUND REFRIGERATOR.
5. UPPER AND LOWER MILLWORK CABINETRY, SEE INTERIOR ELEVATIONS AND MILLWORK DETAILS
6. 34" HIGH GRANITE BREAKFAST COUNTER. SEE INTERIOR ELEVATIONS
7. CLOSET WOOD SHELF AND POLE AT +6'-0" A.F.F.
8. ONE PIECE FIBERGLASS SHOWER ENCLOSURE AS SPECIFIED, SEE PLUMBING PLANS FOR PLUMBING INFORMATION. INSTALL AS PER MANUFACTURER INSTRUCTIONS.
9. 5' TUB AS SPECIFIED. 60"X33" ROUGH OPENING REQUIRED. SEE INTERIOR ELEVATIONS AND PLUMBING PLANS FOR PLUMBING INFORMATION
10. WATER SAVER TOILET AS SPECIFIED, SEE PLUMBING DRAWINGS FOR ADDITIONAL INFORMATION
11. COUNTERTOP LAVATORY AS SPECIFIED, SEE PLUMBING DRAWINGS FOR ADDITIONAL INFORMATION
12. WALL MOUNTED GRAB BAR, SEE DETAIL 11/G0.05
13. MECHANICAL 2 HOUR RATED SHAFT
14. STACKED WASHER AND ELECTRICAL DRYER COMBO WITH CHASE VENT TO OUTSIDE AIR, SEE MECHANICAL DRAWINGS FOR ADDITIONAL INFORMATION
15. BUILT-IN DESK/MILLWORK, SEE INTERIOR ELEVATIONS AND MILLWORK DETAILS
16. LINE OF CABINET BELOW
17. ONE PIECE FIBERGLASS TUB/SHOWER COMBINATION, 60"X33" ROUGH OPENING REQUIRED. SEE PLUMBING DRAWINGS FOR ADDITIONAL INFORMATION.
18. ONE PIECE FIBERGLASS ROLL IN SHOWER. 63"X34" ROUGH OPENING REQUIRED. ALL BATHROOM ACCESSIBLE UNITS HAVE PROVISIONS FOR GRAB BARS.
19. MEDICINE CABINET WITH FRAMELESS MIRROR DOOR

KEY NOTES — Scale 2

1. ALL DIMENSIONS ARE SHOWN TO FACE OF STUD OR FACE OF FRAMING. ALL STUDS ARE 4" DEEP IN NON-BEARING WALLS AND 6" DEEP IN BEARING WALLS.
2. ALL EXTERIOR WALLS, CORRIDOR WALLS, UNIT SEPARATION WALLS, AND INTERIOR BEARING WALLS TO BE OF 2-HOUR FIRE-RESISTIVE CONSTRUCTION.
3. ALL SHAFT WALLS TO BE OF 2-HOUR FIRE-RESISTIVE CONSTRUCTION.
4. SOLID JOINT TO BE USED AT ALL BATHTUB TRAP. (P.C. 405.2)
5. REFER TO SHEET A8.2.1 & A8.2.2 FOR WALL TYPE SCHEDULE
6. REFER TO SHEET A8.01 FOR DOOR SCHEDULE
7. REFER TO SHEET A8.03 FOR WINDOW SCHEDULE
8. REFER TO SHEET G0.05 FOR FIXTURE MOUNTING HEIGHTS AND CLEARANCES.

GENERAL PLAN NOTES — Scale 1

WWC OT
Widom Wein Cohen O'Leary Terasawa

3130 Wilshire Boulevard
Sixth Floor
Santa Monica, California 90403
T (310) 828-0040
F (310) 453-9432
www.wwcot.com

Inland Empire
Palm Springs
Moorpark
Shanghai, China

Building Department Submittal:	June 1, 2007
Issued For Bid:	
Issued For Construction:	January 29, 2008

△3 08-18-2008 EXHAUST & WINDOW/DOOR COORDINATION

RECEIVED AUG 21 2008 FOR PLAN CONSTRUCTION

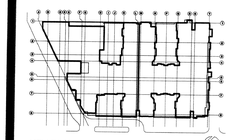

KEY PLAN

RECEIVED AUG 19 2008 FOR PLAN CONSTRUCTION

Project:
Jewish Home for The Aging
FOUNTAINVIEW AT EISENBERG VILLAGE
6440 Wilbur Ave
Reseda, CA. 91335

JEWISH HOME
JEWISH HOME FOR THE AGING
18855 Victory Blvd.
Reseda, CA 91335

Project Number: 04206.00

ENALRGED UNIT PLANS

Date: 01/21/2008
Drawn By:
Checked By:

A7.0.5
Sheet No.

File Path & Name: F:\PROJECTS\04206-00\A-CD\SHEETS\A7.0.5.DWG
© WWCOT 2006 Aug 18, 2008 - 04:21 pm

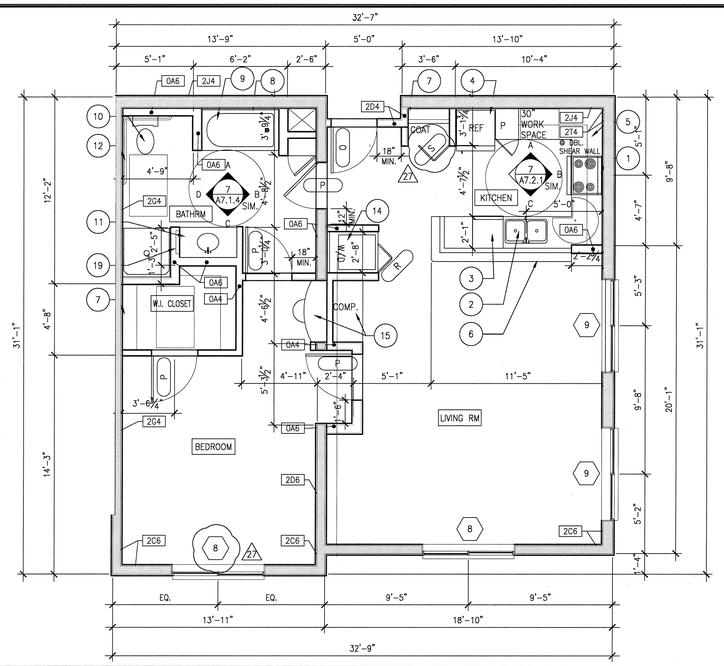

Enlarged Unit Plan 1B-BW

Scale 1/4" = 1'-0" | 15

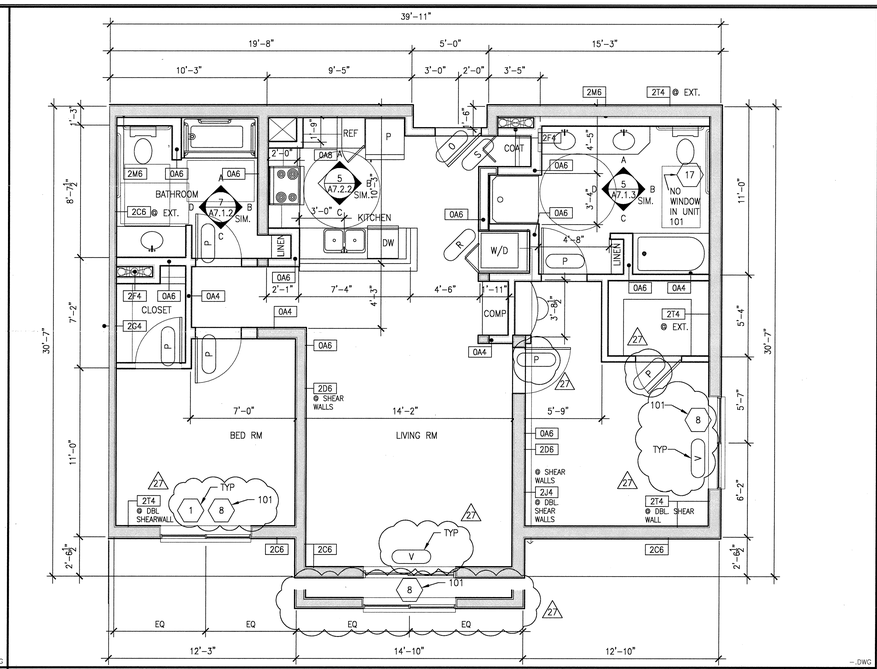

Enlarged Unit 2B-CW

Scale 1/4" = 1'-0" | 7

1. 30" COUNTERTOP ELECTRICAL RANGE AS SPECIFIED WITH HOOD ABOVE
2. DOUBLE SINK WITH GARBAGE DISPOSAL AS SPECIFIED. PROVIDE ELECTRICAL AS NECESSARY. SEE ELECTRICAL DRAWINGS
3. UNDER-COUNTER DISHWASHER AS SPECIFIED
4. REFRIGERATOR, PROVIDE SPACE AS REQUIRED FOR 2" TOLERANCE AROUND REFRIGERATOR.
5. UPPER AND LOWER MILLWORK CABINETRY, SEE INTERIOR ELEVATIONS AND MILLWORK DETAILS
6. 34" HIGH GRANITE BREAKFAST COUNTER. SEE INTERIOR ELEVATIONS
7. CLOSET WOOD SHELF AND POLE AT +6'-0" A.F.F.
8. ONE PIECE FIBERGLASS SHOWER ENCLOSURE AS SPECIFIED, SEE PLUMBING PLANS FOR PLUMBING INFORMATION. INSTALL AS PER MANUFACTURER INSTRUCTIONS.
9. 5' TUB AS SPECIFIED. 60"X33" ROUGH OPENING REQUIRED. SEE INTERIOR ELEVATIONS AND PLUMBING PLANS FOR PLUMBING INFORMATION
10. WATER SAVER TOILET AS SPECIFIED, SEE PLUMBING DRAWINGS FOR ADDITIONAL INFORMATION
11. COUNTERTOP LAVATORY AS SPECIFIED, SEE PLUMBING DRAWINGS FOR ADDITIONAL INFORMATION
12. WALL MOUNTED GRAB BAR, SEE DETAIL 11/G0.05
13. MECHANICAL 2 HOUR RATED SHAFT
14. STACKED WASHER AND ELECTRICAL DRYER COMBO WITH CHASE VENT TO OUTSIDE AIR, SEE MECHANICAL DRAWINGS FOR ADDITIONAL INFORMATION
15. BUILT-IN DESK/MILLWORK, SEE INTERIOR ELEVATIONS AND MILLWORK DETAILS
16. LINE OF CABINET BELOW
17. ONE PIECE FIBERGLASS TUB/SHOWER COMBINATION, 60"X33" ROUGH OPENING REQUIRED. SEE PLUMBING DRAWINGS FOR ADDITIONAL INFORMATION.
18. ONE PIECE FIBERGLASS ROLL IN SHOWER. 63"X34" ROUGH OPENING REQUIRED. ALL BATHROOM ACCESSIBLE UNITS HAVE PROVISIONS FOR GRAB BARS.
19. MEDICINE CABINET WITH FRAMELESS MIRROR DOOR

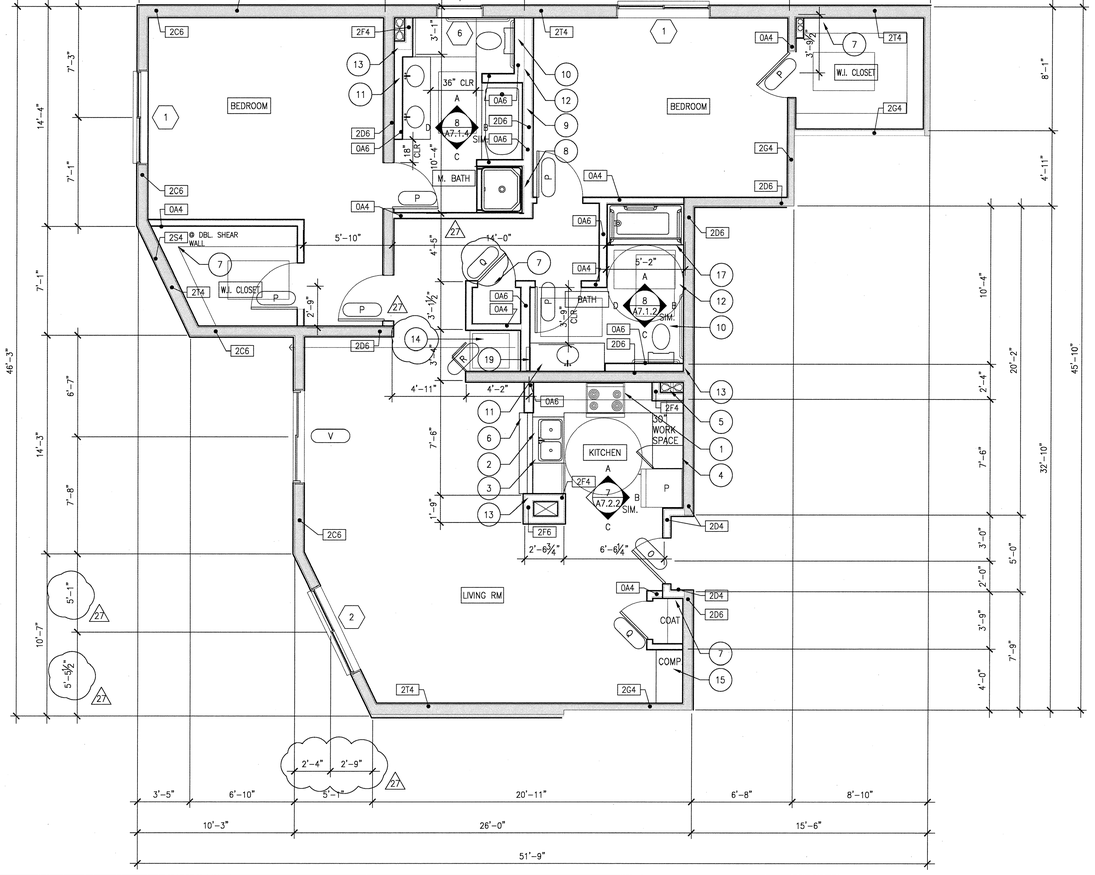

Enlarged Unit Plan 2B-G

Scale 1/4" = 1'-0" | 5

KEY NOTES

Scale | 2

1. ALL DIMENSIONS ARE SHOWN TO FACE OF STUD OR FACE OF FRAMING. ALL STUDS ARE 4" DEEP IN NON-BEARING WALLS AND 6" DEEP IN BEARING WALLS.
2. ALL EXTERIOR WALLS, CORRIDOR WALLS, UNIT SEPARATION WALLS, AND INTERIOR BEARING WALLS TO BE OF 2-HOUR FIRE-RESISTIVE CONSTRUCTION.
3. ALL SHAFT WALLS TO BE OF 2-HOUR FIRE-RESISTIVE CONSTRUCTION.
4. SOLID JOINT TO BE USED AT ALL BATHTUB TRAP. (P.C. 405.2)
5. REFER TO SHEET A8.2.1 & A8.2.2 FOR WALL TYPE SCHEDULE
6. REFER TO SHEET A8.01 FOR DOOR SCHEDULE
7. REFER TO SHEET A8.03 FOR WINDOW SCHEDULE
8. REFER TO SHEET G0.05 FOR FIXTURE MOUNTING HEIGHTS AND CLEARANCES.

gen_notes_enlarged.dwg

GENERAL PLAN NOTES

Scale | 1

WWC OT
Widom Wein Cohen O'Leary Terasawa

3130 Wilshire Boulevard
Sixth Floor
Santa Monica, California 90403
T (310) 828-0040
F (310) 453-9432
www.wwcot.com

Inland Empire
Palm Springs
Moorpark
Shanghai, China

RECEIVED
10:08 am, Aug 14, 2008
FRAMEMAX

Building Department Submittal: June 1, 2007
Issued For Bid:
Issued For Construction: January 29, 2008

27 07-10-2008 PLAN/ELEVATION COORDINATION REVISIONS

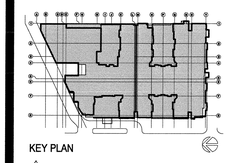

KEY PLAN

RECEIVED
AUG 04 2008
SUFFOLK CONSTRUCTION

Project:
Jewish Home for The Aging
FOUNTAINVIEW AT EISENBERG VILLAGE

6440 Wilbur Ave
Reseda, CA. 91335

JEWISH HOME
JEWISH HOME FOR THE AGING
18855 Victory Blvd.
Reseda, CA 91335

Project Number: 04206.00

ENLARGED UNIT PLANS

Date: 01/21/2008
Drawn By:
Checked By:

A7.0.6
Sheet No.

File Path & Name: F:\PROJECTS\04206-00\A-CD\SHEETS\A7.0.6.DWG
© WWCOT 2006 Jul 28, 2008 - 01:28 pm

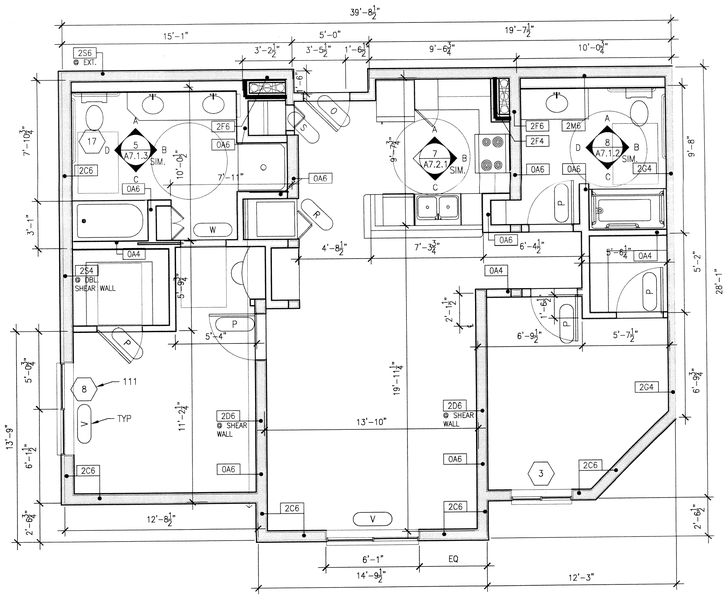

Enlarged Unit Plan 2B-DW — Scale 1/4" = 1'-0" — 3

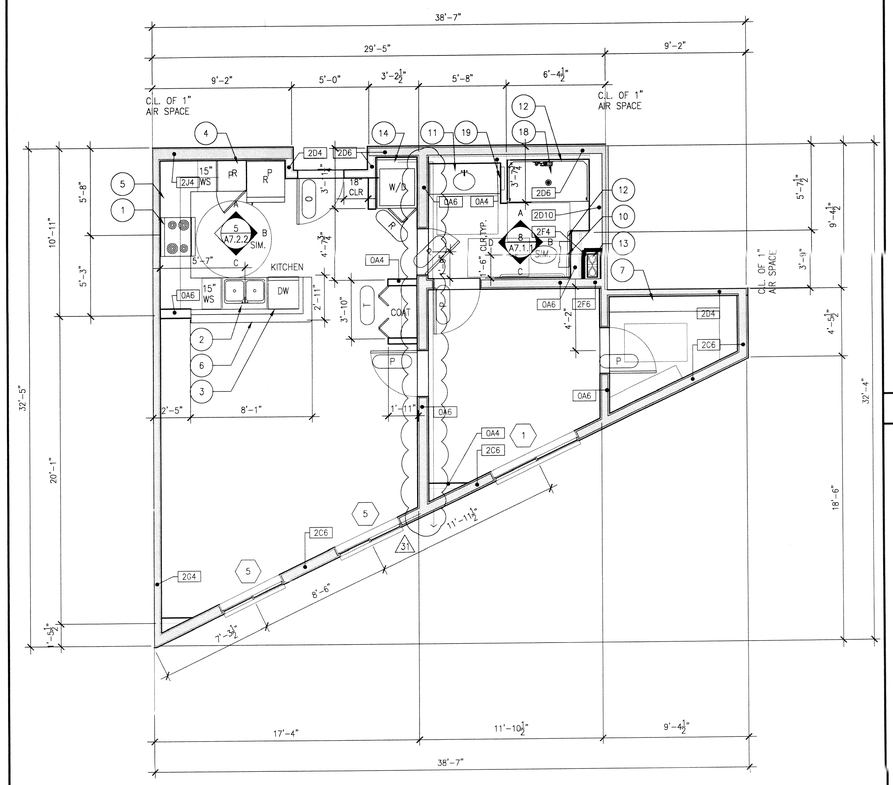

Enlarged Unit Plan - 1B-FA — Scale 1/4" = 1'-0" — 5

1. 30" COUNTERTOP ELECTRICAL RANGE AS SPECIFIED WITH HOOD ABOVE
2. DOUBLE SINK WITH GARBAGE DISPOSAL AS SPECIFIED. PROVIDE ELECTRICAL AS NECESSARY. SEE ELECTRICAL DRAWINGS
3. UNDER-COUNTER DISHWASHER AS SPECIFIED
4. REFRIGERATOR, PROVIDE SPACE AS REQUIRED FOR 2" TOLERANCE AROUND REFRIGERATOR.
5. UPPER AND LOWER MILLWORK CABINETRY, SEE INTERIOR ELEVATIONS AND MILLWORK DETAILS
6. 34" HIGH GRANITE BREAKFAST COUNTER. SEE INTERIOR ELEVATIONS
7. CLOSET WOOD SHELF AND POLE AT +6'-0" A.F.F.
8. ONE PIECE FIBERGLASS SHOWER ENCLOSURE AS SPECIFIED, SEE PLUMBING PLANS FOR PLUMBING INFORMATION. INSTALL AS PER MANUFACTURER INSTRUCTIONS.
9. 5' TUB AS SPECIFIED. 60"X33" ROUGH OPENING REQUIRED. SEE INTERIOR ELEVATIONS AND PLUMBING PLANS FOR PLUMBING INFORMATION
10. WATER SAVER TOILET AS SPECIFIED, SEE PLUMBING DRAWINGS FOR ADDITIONAL INFORMATION
11. COUNTERTOP LAVATORY AS SPECIFIED, SEE PLUMBING DRAWINGS FOR ADDITIONAL INFORMATION
12. WALL MOUNTED GRAB BAR, SEE DETAIL 11/G0.05
13. MECHANICAL 2 HOUR RATED SHAFT
14. STACKED WASHER AND ELECTRICAL DRYER COMBO WITH CHASE VENT TO OUTSIDE AIR, SEE MECHANICAL DRAWINGS FOR ADDITIONAL INFORMATION
15. BUILT-IN DESK/MILLWORK, SEE INTERIOR ELEVATIONS AND MILLWORK DETAILS
16. LINE OF CABINET BELOW
17. ONE PIECE FIBERGLASS TUB/SHOWER COMBINATION, 60"X33" ROUGH OPENING REQUIRED. SEE PLUMBING DRAWINGS FOR ADDITIONAL INFORMATION.
18. ONE PIECE FIBERGLASS ROLL IN SHOWER. 63"X34" ROUGH OPENING REQUIRED. ALL BATHROOM ACCESSIBLE UNITS HAVE PROVISIONS FOR GRAB BARS.
19. MEDICINE CABINET WITH FRAMELESS MIRROR DOOR

KEY NOTES — Scale 2

1. ALL DIMENSIONS ARE SHOWN TO FACE OF STUD OR FACE OF FRAMING. ALL STUDS ARE 4" DEEP IN NON-BEARING WALLS AND 6" DEEP IN BEARING WALLS.
2. ALL EXTERIOR WALLS, CORRIDOR WALLS, UNIT SEPARATION WALLS, AND INTERIOR BEARING WALLS TO BE OF 2-HOUR FIRE-RESISTIVE CONSTRUCTION.
3. ALL SHAFT WALLS TO BE OF 2-HOUR FIRE-RESISTIVE CONSTRUCTION.
4. SOLID JOINT TO BE USED AT ALL BATHTUB TRAP. (P.C. 405.2)
5. REFER TO SHEET A8.2.1 & A8.2.2 FOR WALL TYPE SCHEDULE
6. REFER TO SHEET A8.01 FOR DOOR SCHEDULE
7. REFER TO SHEET A8.03 FOR WINDOW SCHEDULE
8. REFER TO SHEET G0.05 FOR FIXTURE MOUNTING HEIGHTS AND CLEARANCES.

GENERAL PLAN NOTES — Scale 1

WWC OT
Widom Wein Cohen O'Leary Terasawa

3130 Wilshire Boulevard
Sixth Floor
Santa Monica, California 90403
T (310) 828-0040
F (310) 453-9432
www.wwcot.com

Inland Empire
Palm Springs
Moorpark
Shanghai, China

Building Department Submittal: June 1, 2007
Issued For Bid:
Issued For Construction: January 29, 2008

3 08-18-2008 EXHAUST & WINDOW/DOOR COORDINATION

RECEIVED AUG 19 2008 FRAMEWAY CONSTRUCTION

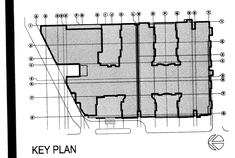

KEY PLAN

RECEIVED AUG 19 2008 SUFFOLK CONSTRUCTION

Project:
Jewish Home for The Aging
FOUNTAINVIEW AT EISENBERG VILLAGE

6440 Wilbur Ave
Reseda, CA. 91335

JEWISH HOME
JEWISH HOME FOR THE AGING
18855 Victory Blvd.
Reseda, CA 91335

Project Number: 04206.00

ENLARGED UNIT PLANS

Date: 01/21/2008
Drawn By: ____
Checked By: ____

A7.0.7
Sheet No.

File Path & Name: F:\PROJECTS\04206-00\A-CD\SHEETS\A7.0.7.DWG
© WWCOT 2006 Aug 18, 2008 - 04:22 pm

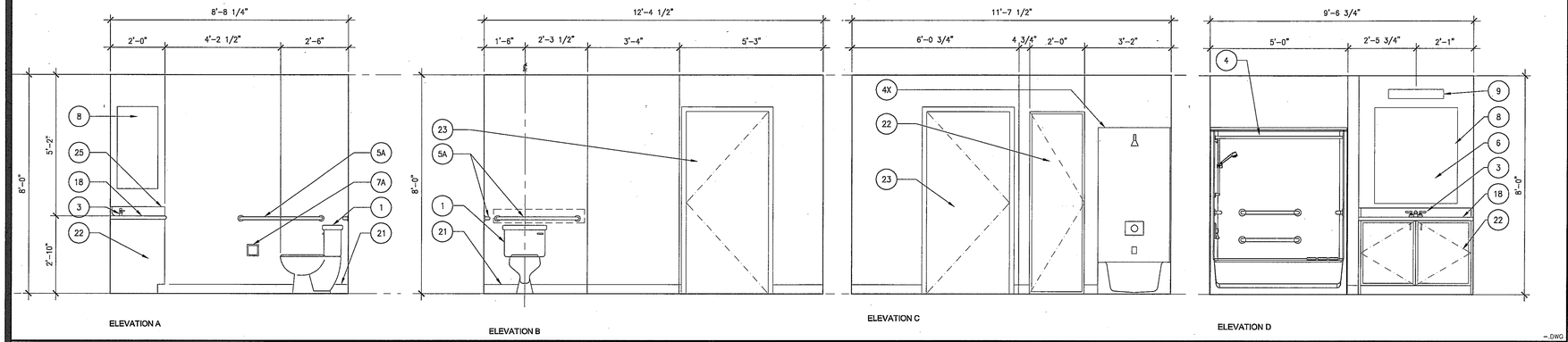

BATHROOM ELEVATIONS- 1BJ-A

Scale 1/2" = 1'-0" — 8 — ~.DWG

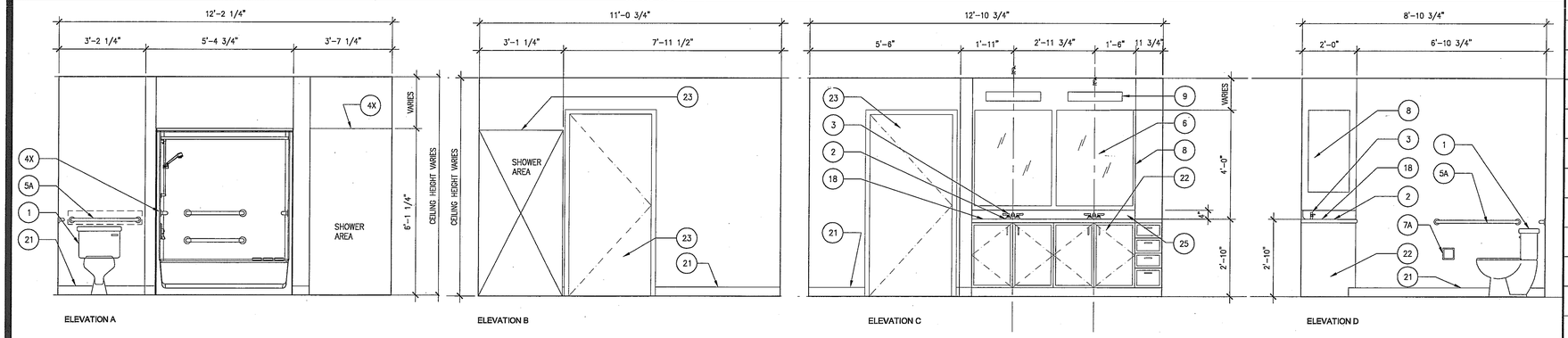

BATHROOM ELEVATIONS- 1B-A

Scale 1/2" = 1'-0" — 7 — ~.DWG

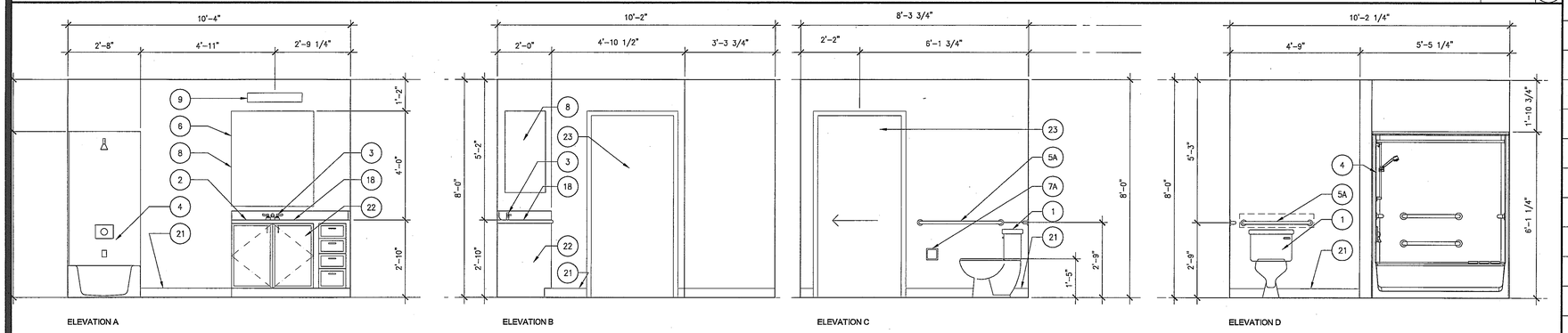

BATHROOM ELEVATIONS- 1BJ-B+DEN

Scale 1/2" = 1'-0" — 6 — ~.DWG

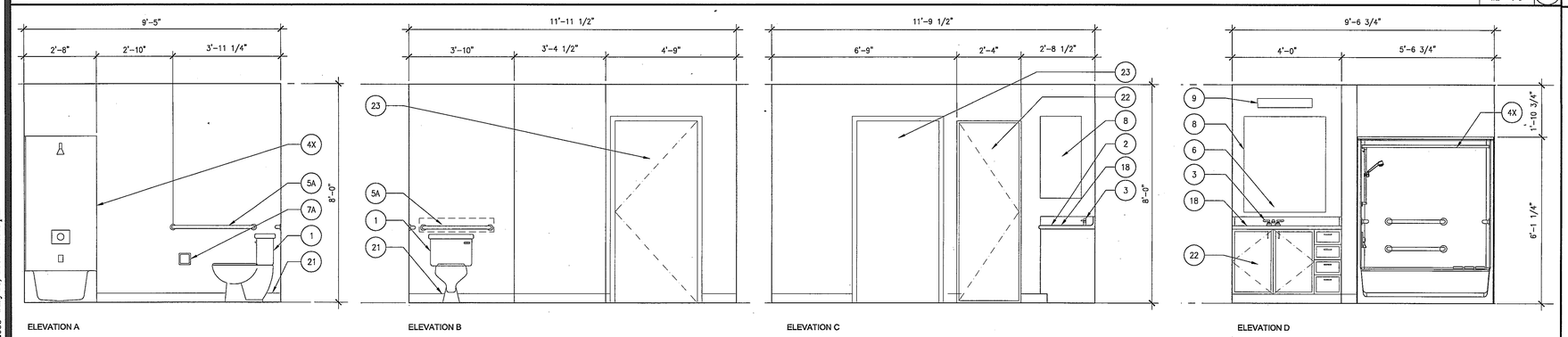

BATHROOM ELEVATIONS- 1BJ-C

Scale 1/2" = 1'-0" — 5 — ~.DWG

UNIT FIXTURE / ACCESSORIES LEGEND

SYMBOL	ITEM DESCRIPTION	FIXTURE SPECS /FINISHES (LEGEND)	DIMENSION
1	WATER CLOSET	SEE FIXTURE SCHEDULE	
2	LAVATORIE(COUNTERTOP)	"	
3	FAUCETS	KOHLER FORTE CENTERSET LAVATORY FAUCET K-10270-4	
4A	SHOWER STALL	SEE FIXTURE SCHEDULE	
4B	BATHTUB	"	
4C	ACCESSIBLE TUB/SHOWER	"	
5A	GRAB BARS(W/C)	"	
5B	GRAB BARS(BATHTUB)	PER MANUFACTUREE FIBER CARE	
5C	SHOWER CURTAIN ROD	SEE FIXTURE SCHEDULE	
6	MIRRORS	"	
7A	TOILET TISSUE HOLDER	"	
7B	TOWEL BAR	"	
7C	ROBE HOOKS	"	
8	MEDICINE CABINETS	W/ FRAMELESS MIRROR DOOR (TYP. RIGHT SIDE OF SINK)	
9	LIGHTING FIXTURE	SEE LIGHT FIXTURE SCHEDULE	
11	KITCHEN SINKS	SEE FIXTURE SCHEDULE	
11A	SINK FAUCET	"	
12	GARBAGE DISPOSAL	"	
13	NOT USED		
14	DISHWASHER	SEE FIXTURE SCHEDULE	
15	COOKTOP/OVEN	"	
16	REFRIGERATOR	"	
17	EXHAUST HOOD	"	
18	COUNTER TOPS	ST-1 (TYP.)	
19	MICROWAVE OVEN	SEE FIXTURE SCHEDULE	
20	WASHER/ DRYER	"	
21	BASE	B-1 (TYP.)	
22	MILLWORK	WD-2	
23	DOOR PER SCHEDULE		
24	FILLER PANEL	WD-2	
25	BACK SPLASH	ST-1 (TYP.)	4"H IN BATHROOM 6"H IN KITCHEN

FIXTURE SCHEDULE

Scale X" = 1'-0" — 2 — ~.DWG

NOTES

Scale X" = 1'-0" — 1 — ~.DWG

1. SEE SHEET A 10.1.0 FOR FIXTURE & HARDWARE MOUNTING HEIGHTS, AND SHEET G0.05 FOR CLEARANCES AT RESTROOMS AND ADA ACCESSIBLE AREAS.

2. SEE A12 SERIES SHEETS FOR FINISH LEGENDS, AND REFER TO SPECIFICATION BOOK SECTION 09000: COLORS & MATERIALS FOR ALL SCHEDULED INTERIOR FINISHES.

3. TYPICAL PAINT FINISH IN UNIT KITCHEN AND BATHROOM TO BE P-2 U.O.N.

WWC OT
Widom Wein Cohen O'Leary Terasawa

3130 Wilshire Boulevard
Sixth Floor
Santa Monica, California 90403
T (310) 828-0040
F (310) 453-9432
www.wwcot.com

Inland Empire
Palm Springs
Moorpark
Shanghai, China

RECEIVED
10:08 am, Aug 14, 2008
FRAMEMAX

Building Department Submittal: June 1, 2007
Issued For Bid:
Issued For Construction:

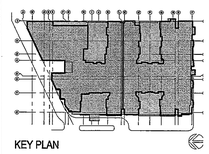

KEY PLAN

Project:
Jewish Home for The Aging
FOUNTAINVIEW AT EISENBERG VILLAGE

6440 Wilbúr Ave
Reseda, CA. 91335

JEWISH HOME FOR THE AGING
18855 Victory Blvd.
Reseda, CA 91335

Project Number: 04206.00

UNIT BATHROOM ELEVATIONS

Date: 04/05/2007
Drawn By:
Checked By:

A7.1.1
Sheet No.

File Path & Name: F:\PROJECTS\04206.00\A-CD\SHEETS\A7.1.1.DWG
© WWCOT 2006 May 28, 2007 - 03:48 pm

RECEIVED BY SUFFOLK ON 06/01/07

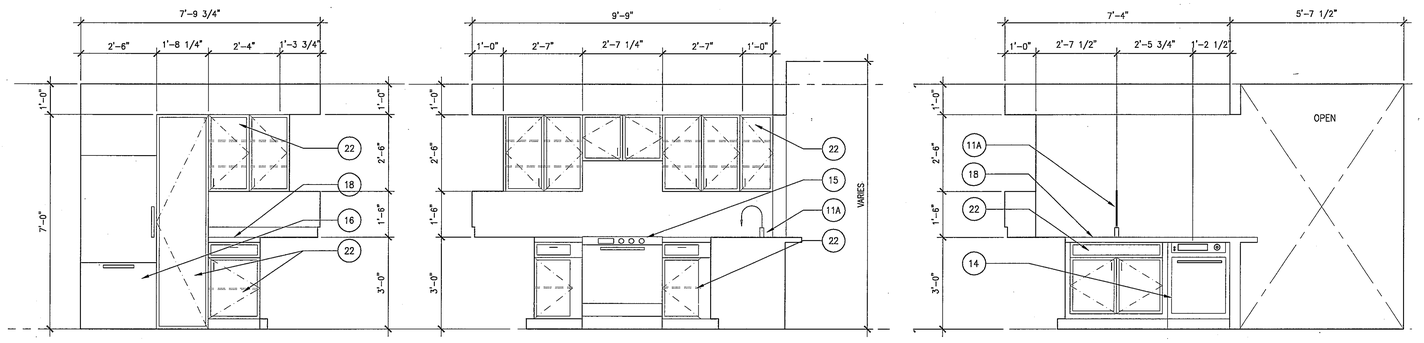

ELEVATION A | ELEVATION B | ELEVATION C

KITCHEN ELEVATIONS- 1BJ-A

Scale 1/2" = 1'-0" — 8 — DWG

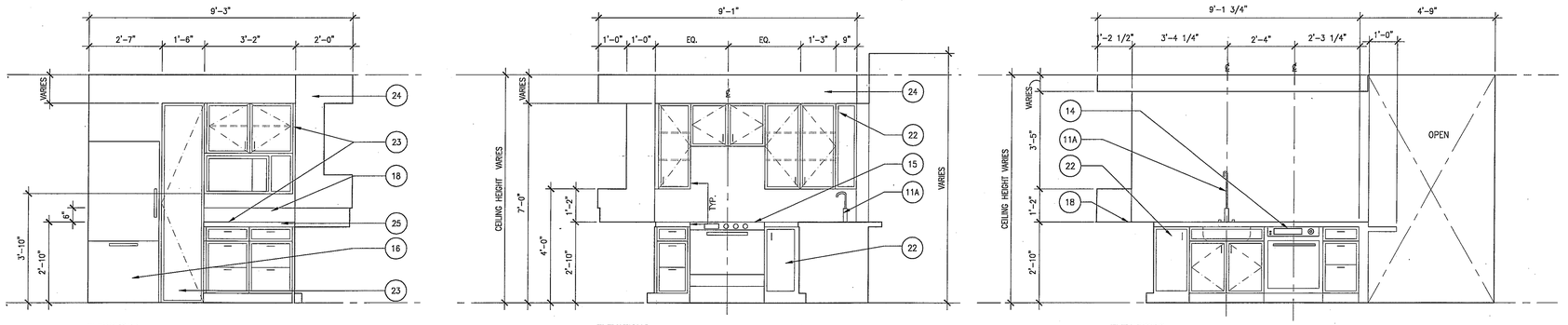

ELEVATION A | ELEVATION B | ELEVATION C

KITCHEN ELEVATIONS- 1B-A

Scale 1/2" = 1'-0" — 7 — DWG

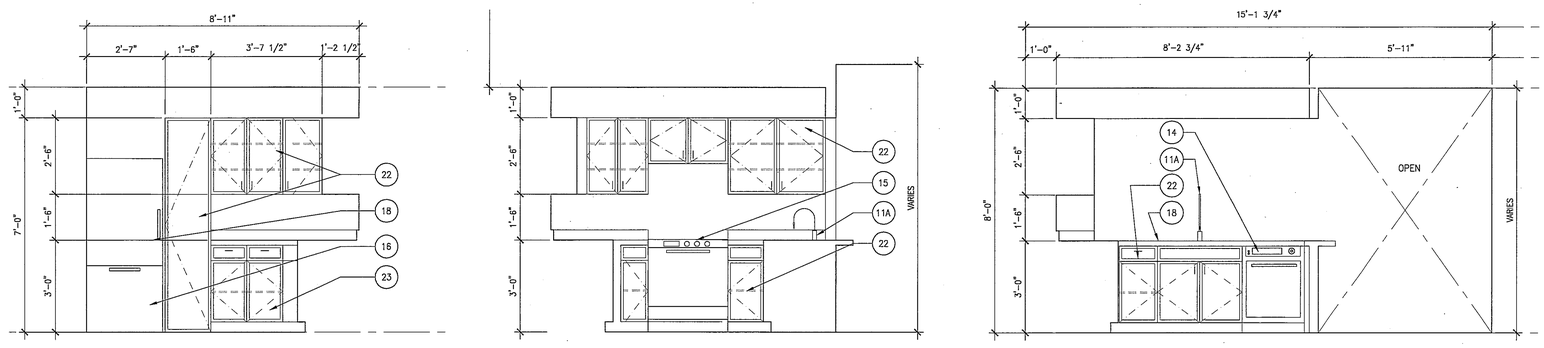

ELEVATION A | ELEVATION B | ELEVATION C

KITCHEN ELEVATIONS- 1BJ-B+DEN

Scale 1/2" = 1'-0" — 6 — DWG

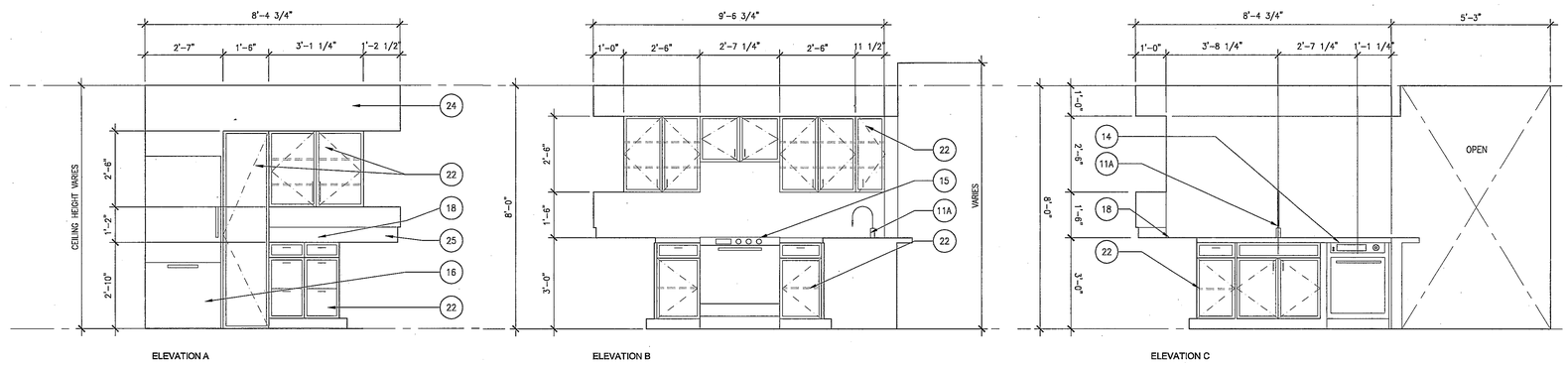

ELEVATION A | ELEVATION B | ELEVATION C

KITCHEN ELEVATIONS- 1BJ-C

Scale 1/2" = 1'-0" — 5 — DWG

UNIT FIXTURE / ACCESSORIES LEGEND

SYMBOL	ITEM DESCRIPTION	FIXTURE SPECS /FINISHES (LEGEND)	DIMENSION
1	WATER CLOSET	SEE FIXTURE SCHEDULE	
2	LAVATORIE(COUNTERTOP)	"	
3	FAUCETS	KOHLER FORTE CENTERSET LAVATORY FAUCET K-10270-4	
4A	SHOWER STALL	SEE FIXTURE SCHEDULE	
4B	BATHTUB	"	
4C	ACCESSIBLE TUB/SHOWER	"	
5A	GRAB BARS(W/C)	"	
5B	GRAB BARS(BATHTUB)	PER MANUFACTUREE FIBER CARE	
5C	SHOWER CURTAIN ROD	SEE FIXTURE SCHEDULE	
6	MIRRORS	"	
7A	TOILET TISSUE HOLDER	"	
7B	TOWEL BAR	"	
7C	ROBE HOOKS	"	
8	MEDICINE CABINETS	W/ FRAMELESS MIRROR DOOR (TYP. RIGHT SIDE OF SINK)	
9	LIGHTING FIXTURE	SEE LIGHT FIXTURE SCHEDULE	
11	KITCHEN SINKS	SEE FIXTURE SCHEDULE	
11A	SINK FAUCET	"	
12	GARBAGE DISPOSAL	"	
13	NOT USED		
14	DISHWASHER	SEE FIXTURE SCHEDULE	
15	COOKTOP/OVEN	"	
16	REFFRIGERATOR	"	
17	EXHAUST HOOD	"	
18	COUNTER TOPS	ST-1 (TYP.)	
19	MICROWAVE OVEN	SEE FIXTURE SCHEDULE	
20	WASHER/ DRYER	"	
21	BASE	B-1 (TYP.)	
22	MILLWORK	WD-2	
23	DOOR PER SCHEDULE		
24	FILLER PANEL	WD-2	
25	BACK SPLASH	ST-1 (TYP.)	4"H IN BATHROOM 6"H IN KITCHEN

FIXTURE SCHEDULE

Scale X" = 1'-0" — 2 — DWG

NOTES

Scale X" = 1'-0" — 1 — DWG

1. SEE SHEET A 10.1.0 FOR FIXTURE & HARDWARE MOUNTING HEIGHTS, AND SHEET G0.05 FOR CLEARANCES AT RESTROOMS AND ADA ACCESSIBLE AREAS.

2. SEE A12 SERIES SHEETS FOR FINISH LEGENDS, AND REFER TO SPECIFICATION BOOK SECTION 09000: COLORS & MATERIALS FOR ALL SCHEDULED INTERIOR FINISHES.

3. TYPICAL PAINT FINISH IN UNIT KITCHEN AND BATHROOM TO BE P-2 U.O.N.

WWC OT
Widom Wein Cohen O'Leary Terasawa

3130 Wilshire Boulevard
Sixth Floor
Santa Monica, California 90403
T (310) 828-0040
F (310) 453-9432
www.wwcot.com

Inland Empire
Palm Springs
Moorpark
Shanghai, China

RECEIVED
10:08 am, Aug 14, 2008
FRAMEMAX

Building Department Submittal: June 1, 2007
Issued For Bid:
Issued For Construction:

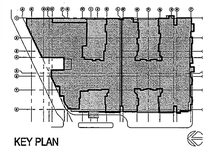

KEY PLAN

Project:
Jewish Home for The Aging
FOUNTAINVIEW AT EISENBERG VILLAGE
6440 Wilbur Ave
Reseda, CA. 91335

JEWISH HOME FOR THE AGING
18855 Victory Blvd.
Reseda, CA 91335
Project Number: 04206.00

Enlarged Unit Kitchen Floor Plan, RCP, and Elevations

Date: 04/05/2007
Drawn By:
Checked By:

A7.2.1
Sheet No.

File Path & Name: F:\PROJECTS\04206-00\A-CD\SHEETS\A7.2.1.DWG
© WWCOT 2006 May 28, 2007 - 03:48 pm

RECEIVED BY SUFFOLK ON 06/01/07

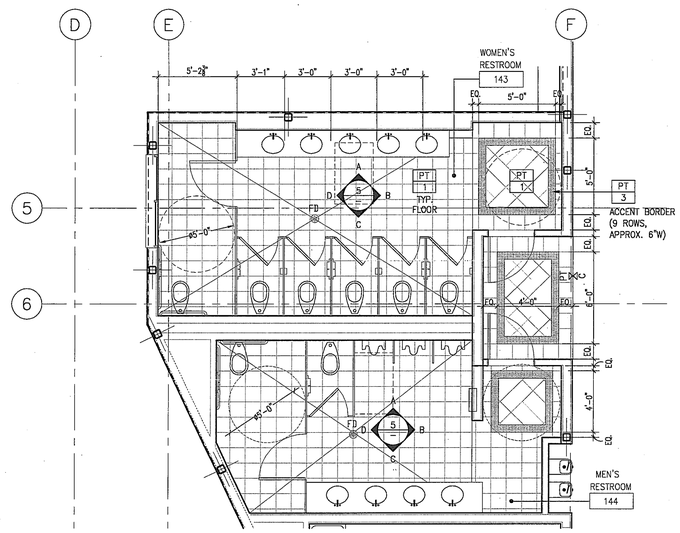

PLAN-GROUND FLOOR COMMON RESTROOM — Scale 1/4" = 1'-0" — 7

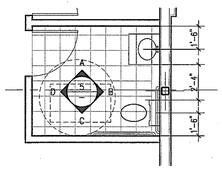

PLAN

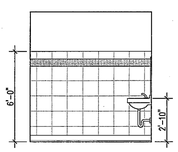

A : EAST

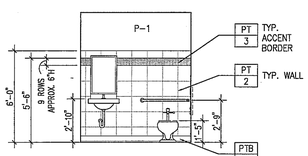

B:SOUTH

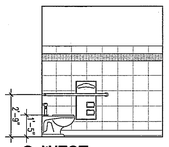

C: WEST

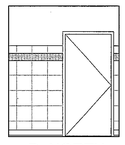

D: NORTH

RESTROOM-EXERCISE ROOM — Scale X" = 1'-0" — 6

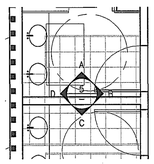

PLAN

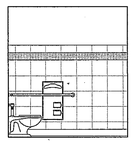

A : EAST

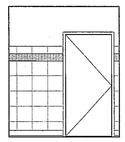

B:SOUTH

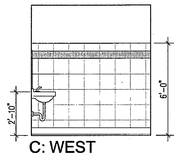

C: WEST

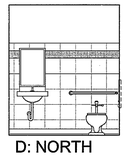

D: NORTH

RESTROOM-THEATRE — Scale X" = 1'-0" — 5

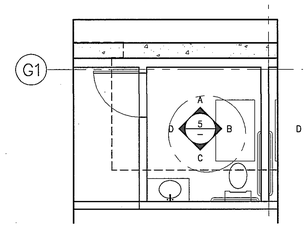

PLAN

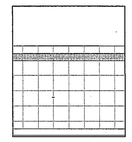

A : EAST

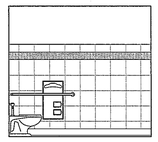

B:SOUTH

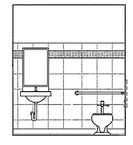

C: WEST

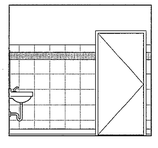

D: NORTH

RESTROOM-EMPLOYEE LOCKER ROOM — Scale X" = 1'-0" — 1

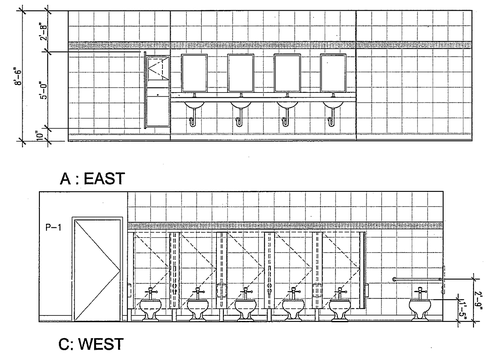

A : EAST

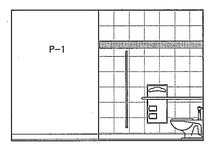

B:SOUTH

C: WEST

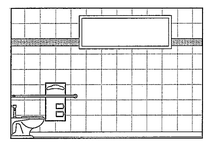

D: NORTH

INTERIOR ELEVATIONS-WOMEN'S RESTROOM — Scale 1/4" = 1'-0" — 4

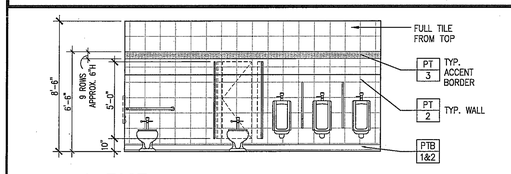

A : EAST

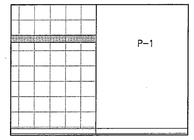

B:SOUTH

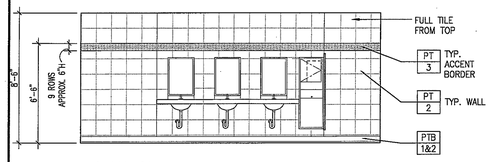

C: WEST

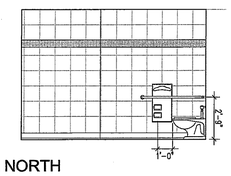

D: NORTH

INTERIOR ELEVATIONS-MEN'S RESTROOM — Scale 1/4" = 1'-0" — 3

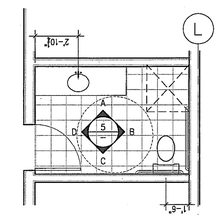

PLAN

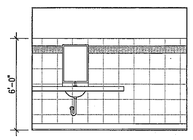

A : EAST

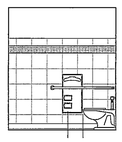

B:SOUTH

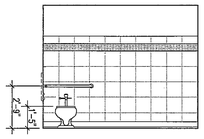

C: WEST

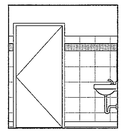

D: NORTH

RESTROOM-SPA — Scale X" = 1'-0" — 2

FIXTURE SCHEDULE — Scale — 3

TOILET ACCESSORIES	ABBREV.	MODEL No.
WALL MOUNT PAPER TOWEL DISPENSER/RECEPTACLE	PTD	BOBRICK B-2621
RECESSED TOILET PAPER DISPENSER / SEAT COVER	TPD1	BOBRICK B-3474
PARTITION TOILET PAPER DISPENSER / SEAT COVER	TPD2	BOBRICK B-3471
SOAP DISPENSER	SD	BOBRICK B-2111
FEMENINE NAPKIN DISPOSAL	FND	BOBRICK B-354
GRAB BAR – TOILET COMPARTMENT	GB1	BOBRICK B-68137
TILT MIRROR	MI	BOBRICK B-293
CLOTHES HOOK	CH1	BOBRICK B-211
	CH2	BOBRICK B-212
UTILITY SHELF & MOP STRIP	USH	BOBRICK B-259
	SH16	BOBRICK B-296x16
ROLL OF PAPER TOWEL DISPENSER	RPD	BOBRICK B-253
TOILET PARTITION	TP	BOBRICK SERIES 1031

NOTES:

1. SEE SHEET A 10.1.0 FOR FIXTURE & HARDWARE MOUNTING HEIGHTS, AND SHEET G0.05 FOR CLEARANCES AT RESTROOMS AND ADA ACCESSIBLE AREAS.
2. IT IS THE INTENT OF THESE DRAWINGS AND SPECIFICATIONS TO PROVIDE ALL TOILET ROOM ACCESSORIES AS PER TITLE 24 ACCESSIBILITIES STANDRDS. CONTRACTOR TO CONTACTACT ARCHITECT SHOULD ANY DISCREPANCIES OCCUR.
3. PROVIDE BACKING AS REQUIRED FOR PROPER FIXTURE MOUNTING ON WALL.
4. PROVIDE FLUSH VALVES IN TOILETS TO WIDE SIDE OF SPACE.
5. SEE 9/A11.6.4 FOR TYPICAL BACKING DETAILS.

(RIS) ROOM IDENTIFICATION SIGN REFER TO G0.06

KEY NOTES — Scale — 2

PT # — PT– PORCELAIN TILE FLOORING & WAINSCOT

PTB # — PTB– PORCELAIN TILE BASE (FINGERCOVE .+ 4"H BASE)

C PT ALIGN — FLOOR MATERIAL CHANGE ALIGN ADJACENT SURFACES

FINISH NOTES:

1. SEE A12 SERIES SHEETS FOR FINISH LEGENDS, AND REFER TO SPECIFICATION BOOK SECTION 09000: COLORS & MATERIALS FOR ALL SCHEDULED INTERIOR FINISHES.
2. INTERIOR WALL AND FINISH CEILINGS SHALL COMPLY WITH CBC TABLE 88.
3. TEXTILE WALL COVERINGS SHALL COMPLY WITH CBC SECTION 805.
4. ANY DECORATIONS SHALL BE NON COMBUSTIBLE OR FLAME RETARDANT TREATED IN AN APPROVED MANNER (CURTAINS, DRAPES, SHADES, HANGINGS, ETC.).
5. REFER TO REFLECTIVE CEILING PLAN FOR CEILING LAYOUT AND HEIGHTS.
6. REFER TO SHEET A11.6.4 FOR TYPICAL MATERIAL TRANSITION DETAILS.
7. SEE INTERIOR ELEVATIONS FOR COMPLETE WALL FINISH MATERIALS AND TRANSITIONS.
8. SEAL CONCRETE PRIOR TO FLOORING INSTALLATION THIS ROOM
9. PROVIDE THRESHOLD, SEE DETAIL 18/A11.6.4.

a-finish-schedule.dwg

SYMBOLS AND LEGENDS — Scale — 1

WWC OT
Widom Wein Cohen O'Leary Terasawa

3130 Wilshire Boulevard
Sixth Floor
Santa Monica, California 90403
T (310) 828-9040
F (310) 453-9432
www.wwcot.com

Inland Empire
Palm Springs
Moorpark
Shanghai, China

RECEIVED
10:08 am, Aug 14, 2008
FRAMEMAX

Building Department Submittal: June 1, 2007
Issued For Bid: ____
Issued For Construction: ____

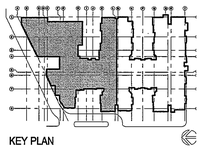

KEY PLAN

Project:
Jewish Home for The Aging
FOUNTAINVIEW AT EISENBERG VILLAGE
6440 Wilbur Ave
Reseda, CA. 91335

JEWISH HOME FOR THE AGING
18855 Victory Blvd.
Reseda, CA 91335
Project Number: 04206.00

ENLARGED COMMON RESTROOM

Date: 04/05/2007
Drawn By: ____
Checked By: ____

A7.09
Sheet No.

File Path & Name: F:\PROJECTS\04206.00\A-CD\SHEETS\A7.09.DWG
© WWCOT 2006 May 28, 2007 - 03:49 pm

RECEIVED BY SUFFOLK ON 06/01/07

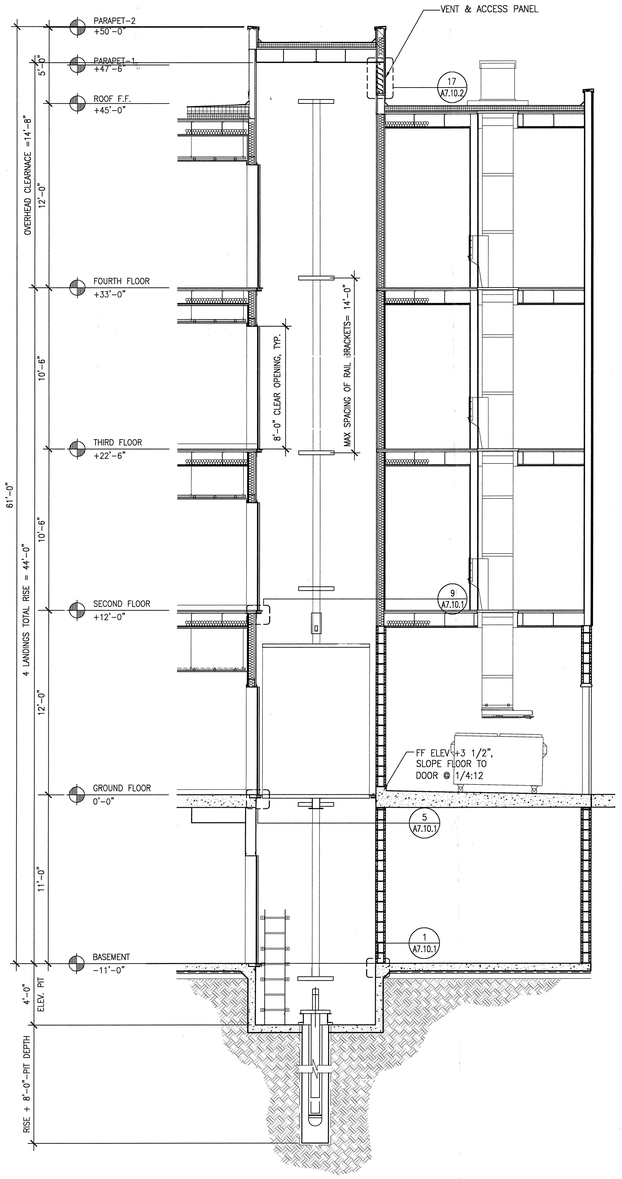

NOTE: SEE DETAIL 10/A7.10.1 FOR INFORMATION NOT SHOWN HERE

elevator4-section.dwg

ELEVATOR 4 - SECTION

Scale 1/4" = 1'-0" 18

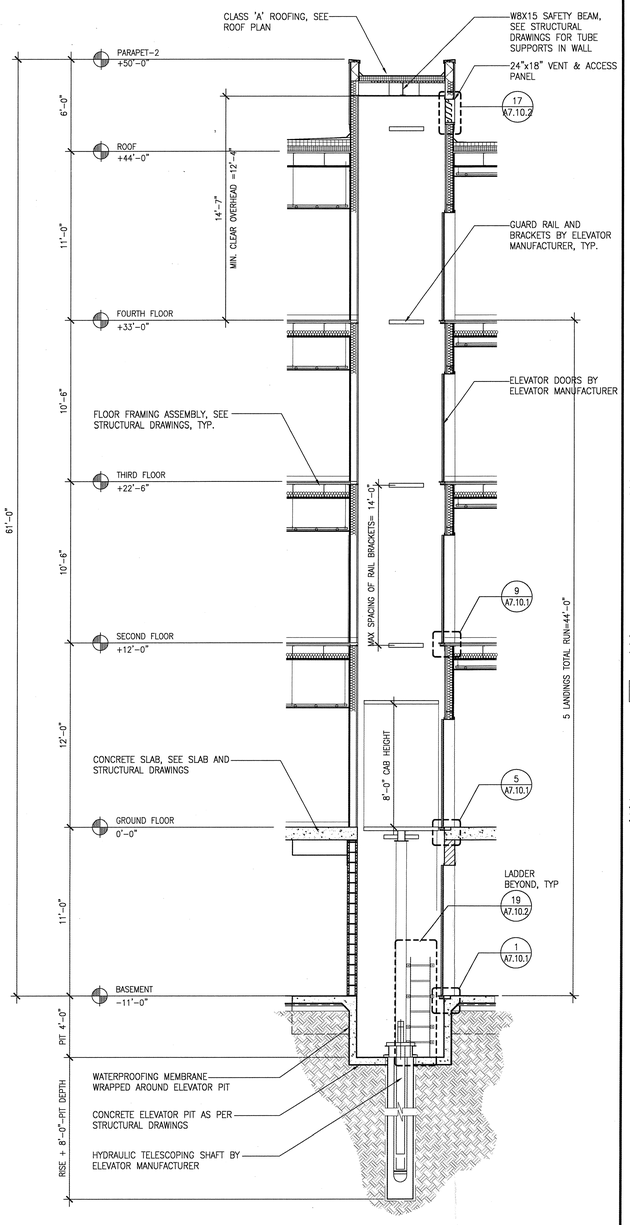

-.DWG

ELEVATOR 1 SECTION

Scale 1/4" = 1'-0" 10

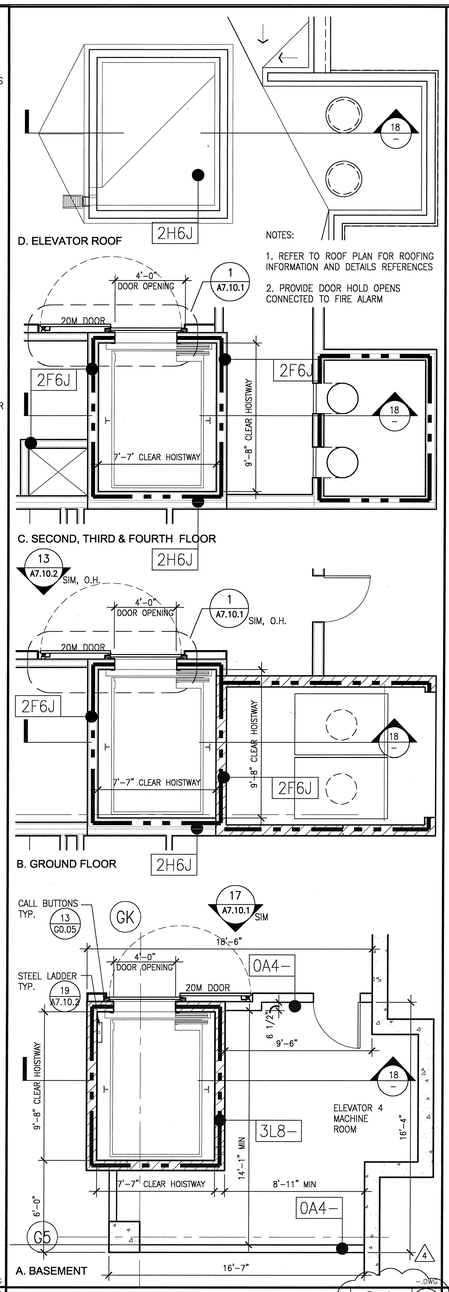

-.DWG

ELEVATOR 4 PLANS

Scale 1/4" = 1'-0" 6

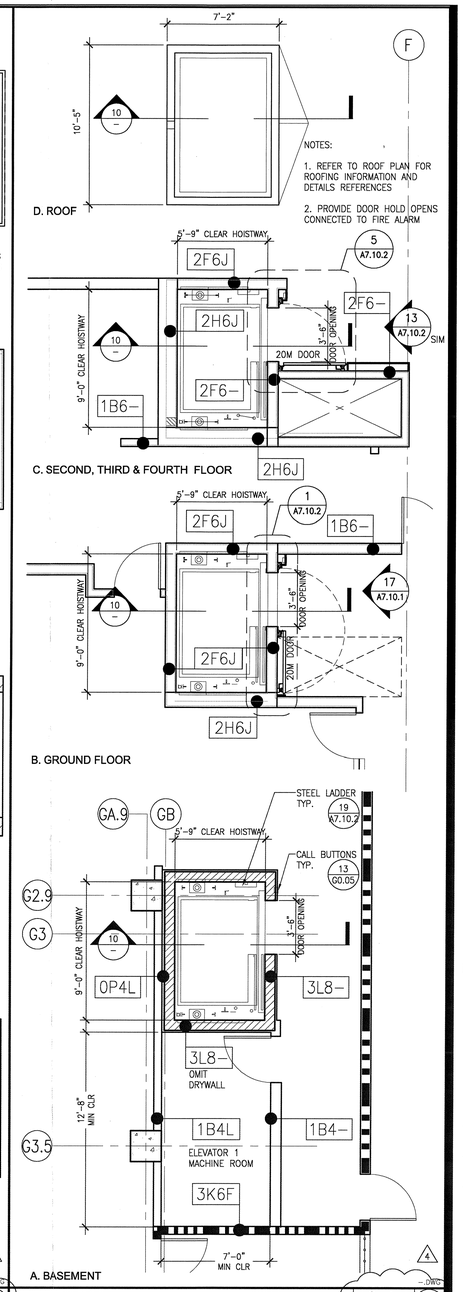

-.DWG

ELEVATOR 1 PLANS

Scale 1/4" = 1'-0" 2

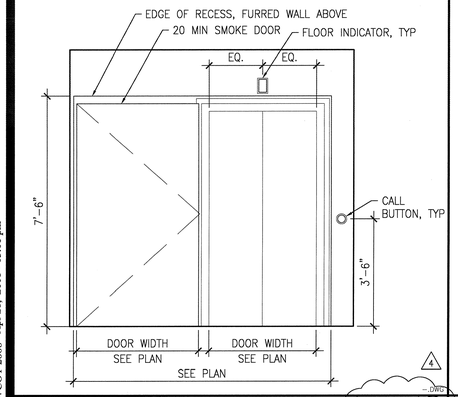

-.DWG

TYP. SMOKE DOOR ELEVATION

Scale 1/2" = 1'-0" 17

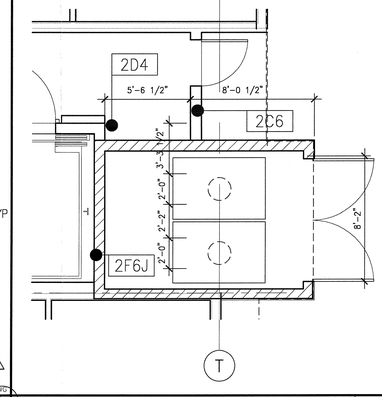

Enlarged Trash room

Scale 1/4"=1'-0" 13

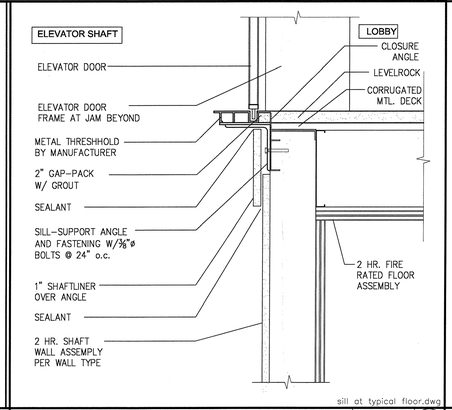

sill at typical floor.dwg

ELEVATOR SILL @ TYP. FLOOR

Scale 1 1/2"=1'-0" 9

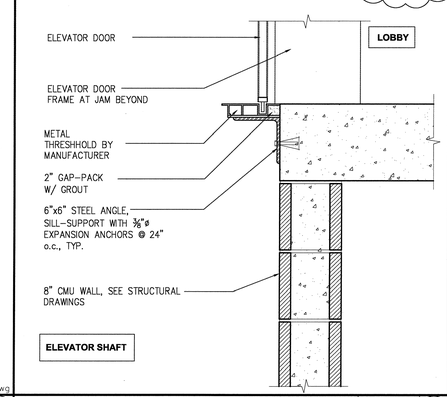

ELEVATOR SILL @ GROUND FLOOR

Scale 1 1/2"=1'-0" 5

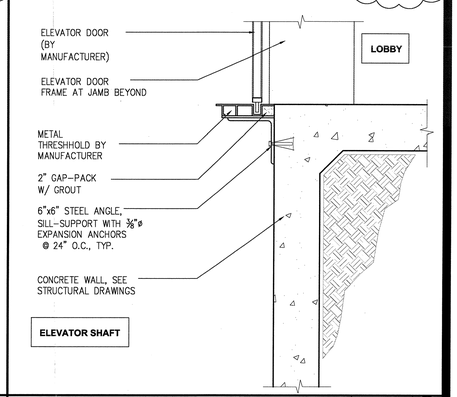

ELEVATOR SILL @ BASEMENT

Scale 1 1/2"=1'-0" 1

File Path & Name: F:\PROJECTS\04206.00\A-CD\SHEETS\A7.10.1.DWG
© WWCOT 2006 Apr 28, 2008 - 03:00 pm

WWC OT
Widom Wein Cohen O'Leary Terasawa
3130 Wilshire Boulevard
Sixth Floor
Santa Monica, California 90403
T (310) 828-0040
F (310) 453-9432
www.wwcot.com
Inland Empire
Palm Springs
Moorpark
Shanghai, China

RECEIVED
10:08 am, Aug 14, 2008
FRAMEMAX

Building Department Submittal: June 1, 2007
Issued For Bid: ——
Issued For Construction: January 29, 2008

4 04-28-2008 SMOKE DOOR AND ELEC ROOM REVISIONS

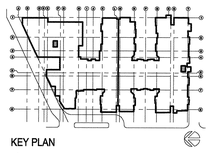

KEY PLAN

Project:
Jewish Home for The Aging
FOUNTAINVIEW AT EISENBERG VILLAGE
6440 Wilbur Ave
Reseda, CA. 91335
JEWISH HOME
JEWISH HOME FOR THE AGING
18855 Victory Blvd.
Reseda, CA 91335
Project Number: 04206.00

ELEVATOR 1 & 4 PLANS & SECTIONS

Date: 01/21/2008
Drawn By: ——
Checked By: ——

A7.10.1
Sheet No.

RECEIVED
APR 30 2008
CITY OF LOS ANGELES
DEPARTMENT OF BUILDING AND SAFETY
PLAN CHECK CONSTRUCTION

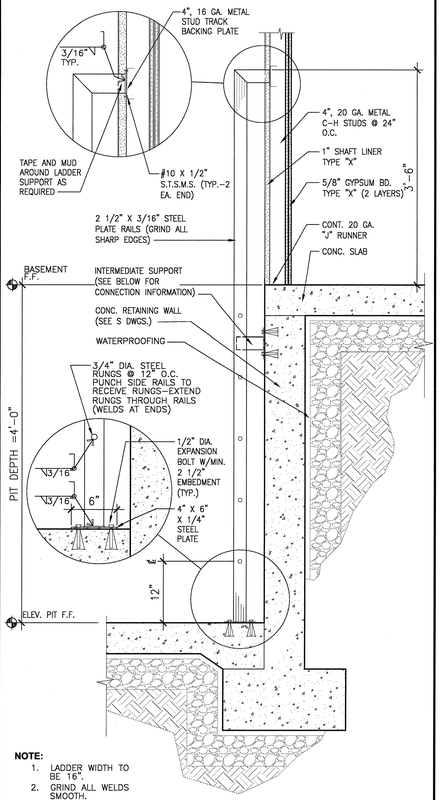

NOTE:
1. LADDER WIDTH TO BE 16".
2. GRIND ALL WELDS SMOOTH.

142000AH

Elevator Pit Ladder Detail

Scale 1"=1'-0" — 19

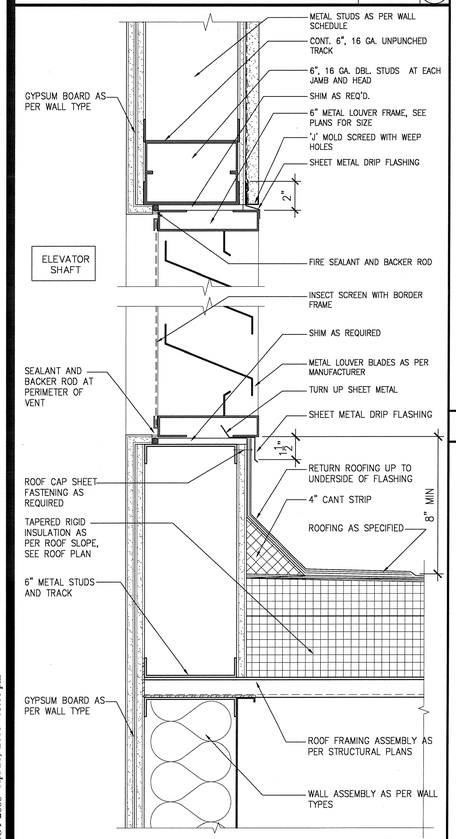

a-dtl-Elev-Louver.dwg

ELEVATOR PENTHOUSE LOUVER

Scale 3" = 1'-0" — 17

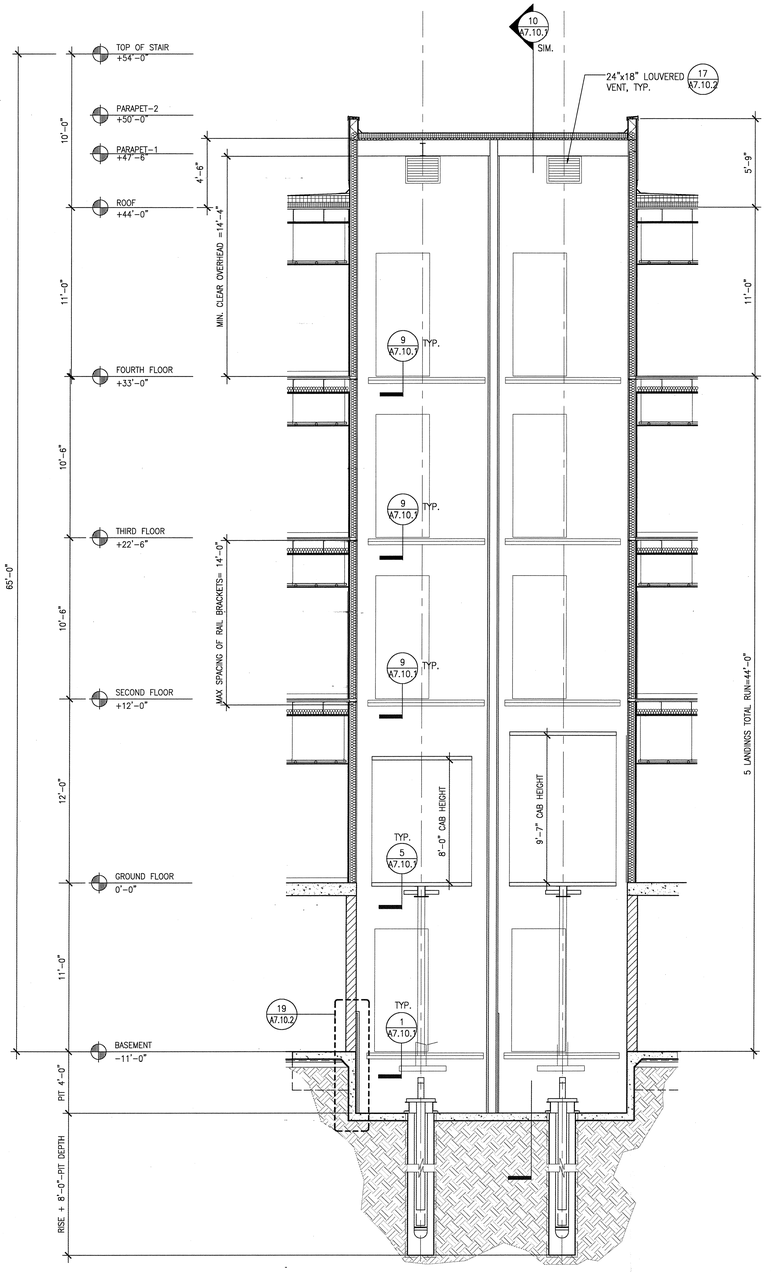

ELEVATOR 2&3 – SECTION

Scale 1/4" = 1'-0" — 10 — –.DWG

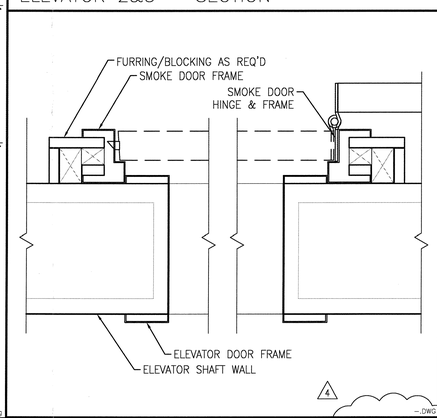

SMOKE DOOR JAMB DETAILS

Scale 3" = 1'-0" — 13 — –.DWG

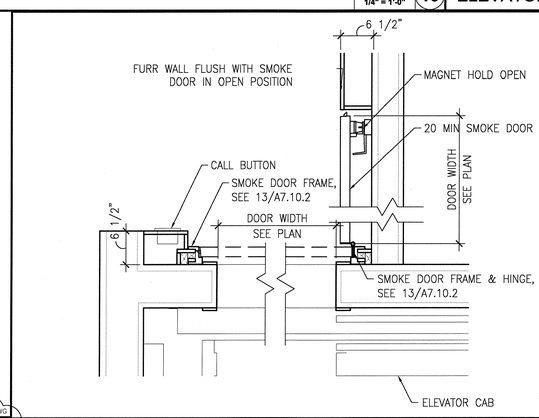

ELEVATOR #1, 90° SMOKE DOOR

Scale 1" = 1'-0" — 5 — –.DWG

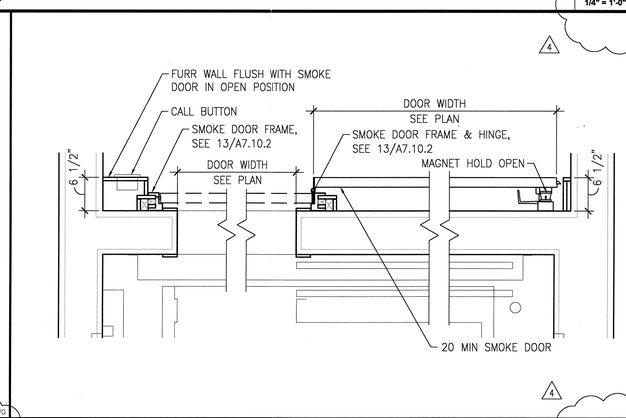

ELEVATOR #1, 180° SMOKE DOOR

Scale 1" = 1'-0" — 1 — –.DWG

C. ROOF

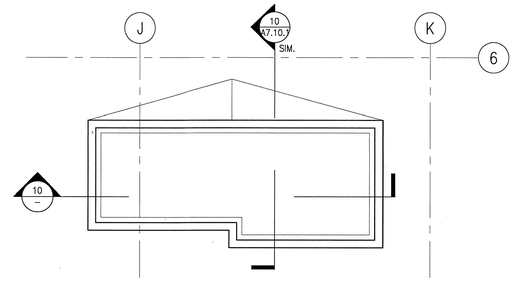

NOTES:

1. REFER TO ROOF PLAN FOR ROOFING INFORMATION AND DETAILS REFERENCES
2. PROVIDE DOOR HOLD OPENS CONNECTED TO FIRE ALARM

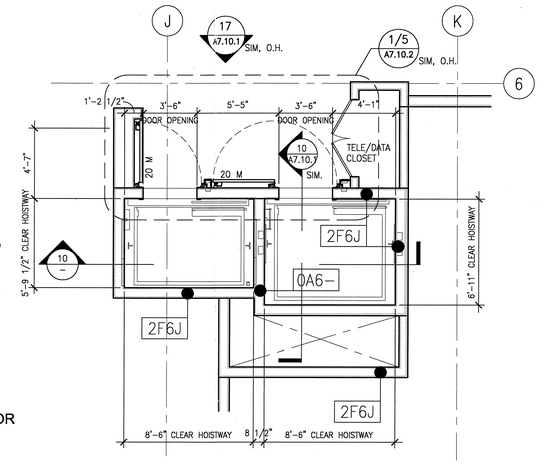

B. GROUND TO FOURTH FLOOR

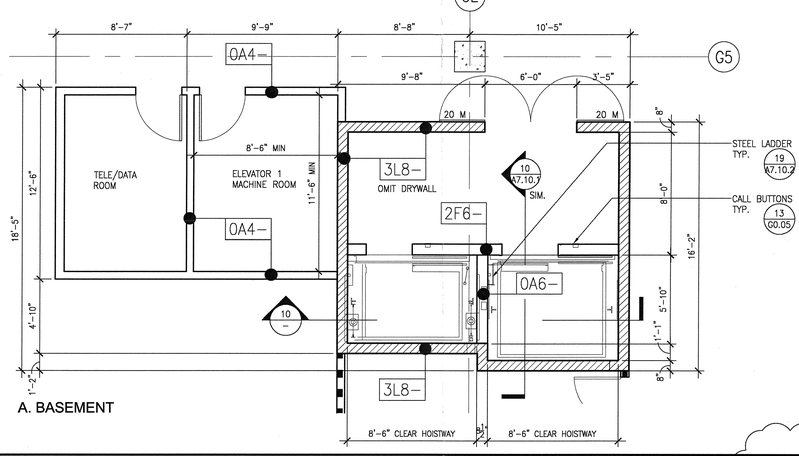

A. BASEMENT

ELEVATOR 2&3 - PLANS

Scale 1/4" = 1'-0" — 2 — –.DWG

WWC OT
Widom Wein Cohen O'Leary Terasawa

3130 Wilshire Boulevard
Sixth Floor
Santa Monica, California 90403
T (310) 828-0040
F (310) 453-9432
www.wwcot.com

Inland Empire
Palm Springs
Moorpark
Shanghai, China

RECEIVED
10:08 am, Aug 14, 2008
FRAMEMAX

Building Department Submittal: June 1, 2007
Issued For Bid: _____
Issued For Construction: January 29, 2008

4 04-28-2008 SMOKE DOOR AND ELEC ROOM REVISIONS

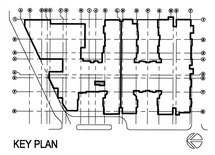

KEY PLAN

Project:
Jewish Home for The Aging
FOUNTAINVIEW AT EISENBERG VILLAGE
6440 Wilbur Ave
Reseda, CA. 91335

JEWISH HOME
JEWISH HOME FOR THE AGING
18855 Victory Blvd.
Reseda, CA 91335
Project Number: 04206.00

ELEVATOR 2 & 3 PLANS & SECTIONS

Date: 01/21/2008
Drawn By: _____
Checked By: _____

A7.10.2
Sheet No.

RECEIVED
APR 30 2008
SUFFOLK CONSTRUCTION

File Path & Name: F:\PROJECTS\04206-00\A-CD\SHEETS\A7.10.2.DWG
© WWCOT 2006 Apr 28, 2008 - 03:00 pm

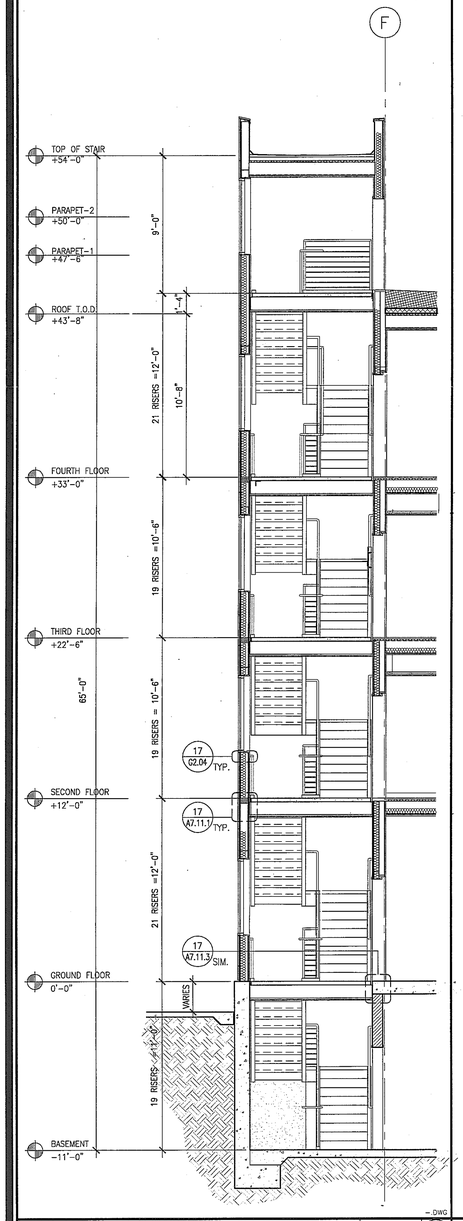

STAIR1-SECTION — Scale 1/4" = 1'-0" — 18

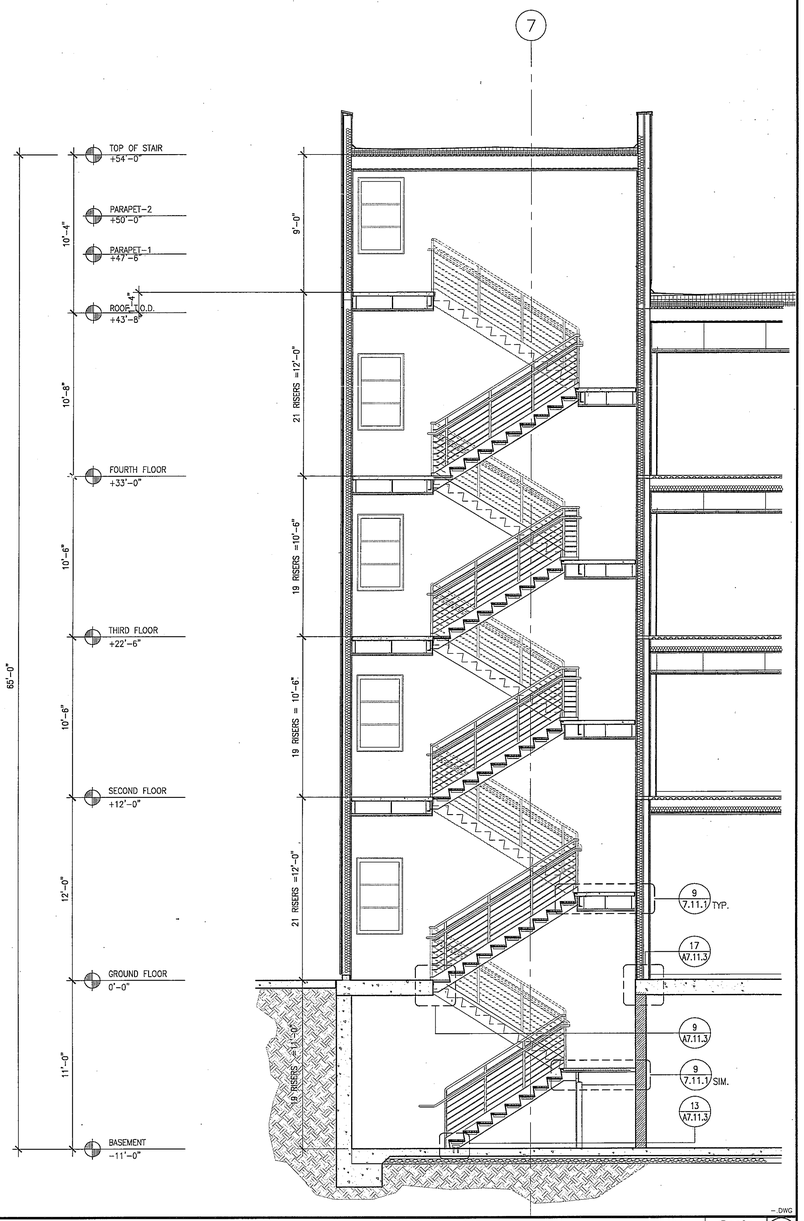

STAIR 1-SECTION — Scale 1/4" = 1'-0" — 10

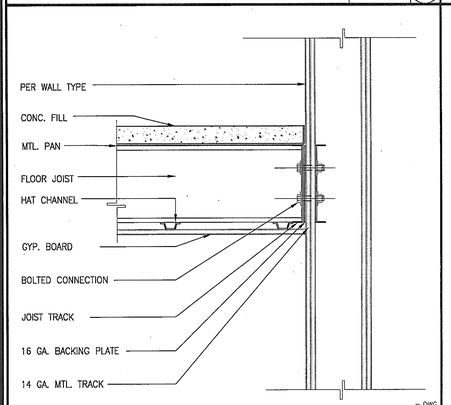

SECTION @ LANDING PARALLEL TO JOISTS — Scale 1 1/2" = 1'-0" — 17

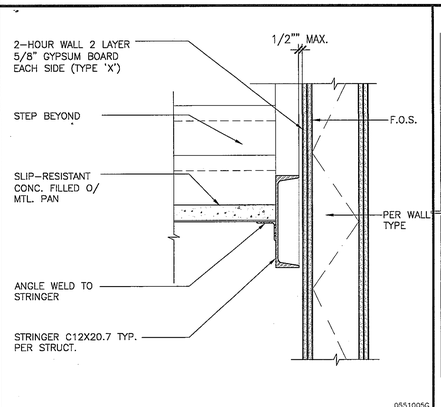

STRINGER @ WALL — Scale 1 1/2" = 1'-0" — 13

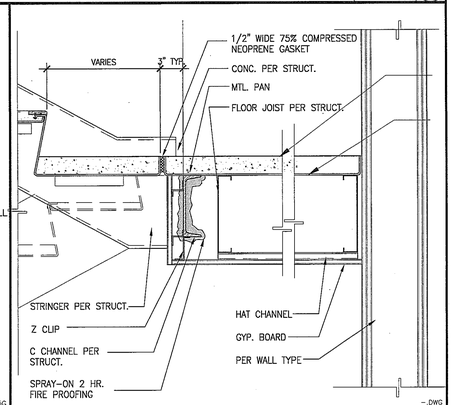

STRINGER @ LANDING — Scale 1 1/2" = 1'-0" — 9

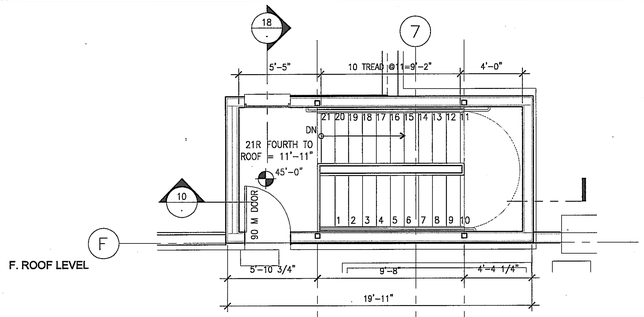

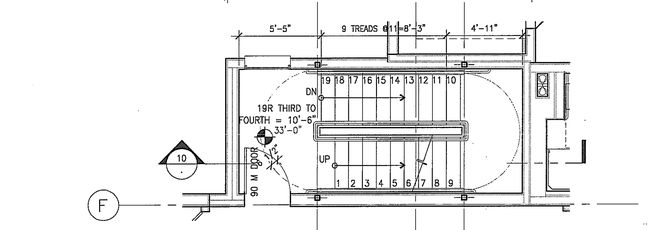

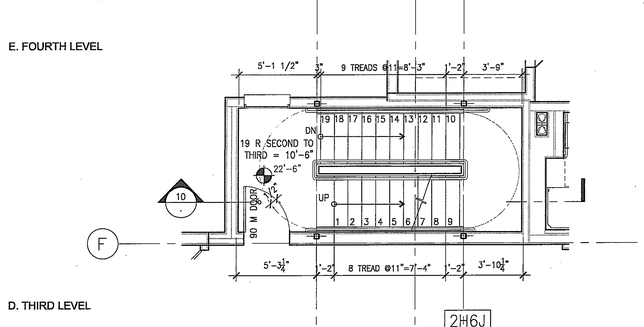

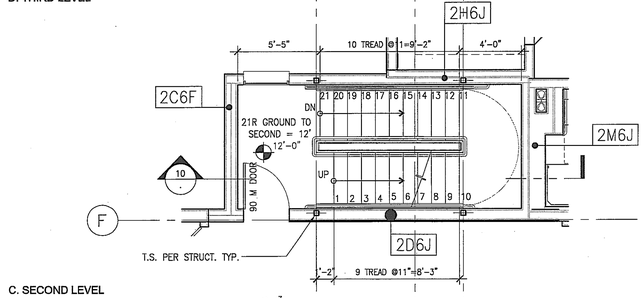

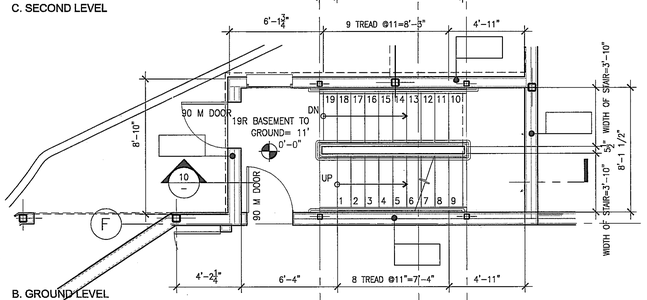

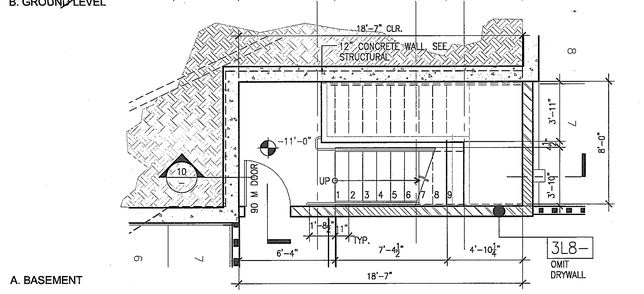

STAIR1 FLOOR PLANS — Scale 1/4" = 1'-0" — 1

File Path & Name: F:\PROJECTS\04206-00\A-CD\SHEETS\A7.11.1.DWG
© WWCOT 2006 May 28, 2007 - 03:49 pm

WWC OT
Widom Wein Cohen O'Leary Terasawa

3130 Wilshire Boulevard
Sixth Floor
Santa Monica, California 90403
T (310) 828-0040
F (310) 453-9432
www.wwcot.com

Inland Empire
Palm Springs
Moorpark
Shanghai, China

RECEIVED
10:08 am, Aug 14, 2008
FRAMEMAX

Building Department Submittal: June 1, 2007
Issued For Bid: ____
Issued For Construction: ____

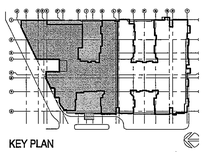

KEY PLAN

Project:
Jewish Home for The Aging
FOUNTAINVIEW AT EISENBERG VILLAGE
6440 Wilbur Ave
Reseda, CA. 91335

JEWISH HOME FOR THE AGING
18855 Victory Blvd.
Reseda, CA 91335
Project Number: 04206.00

STAIR #1 PLANS & SECTIONS
Date: 04/05/2007
Drawn By: ____
Checked By: ____

A7.11.1
Sheet No.

RECEIVED BY SUFFOLK ON 06/01/07

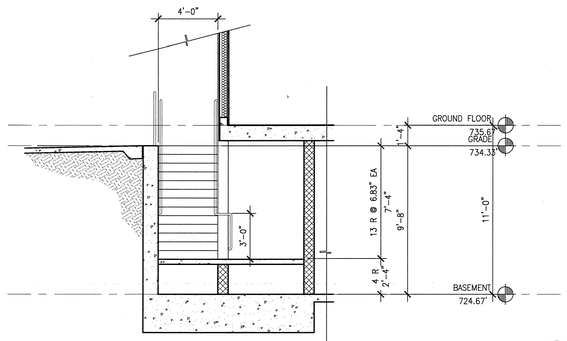

STAIR 7 -SECTION

Scale 1/4" = 1'-0" — 12 — DWG

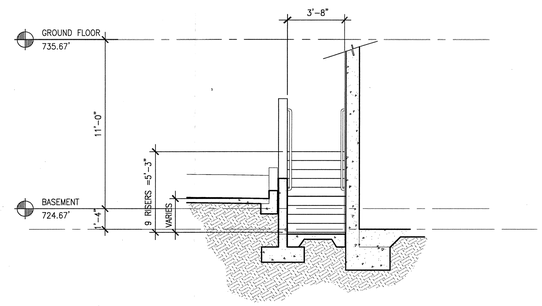

9

STAIR 2 -SECTION

Scale 1/4" = 1'-0" — 4 — DWG

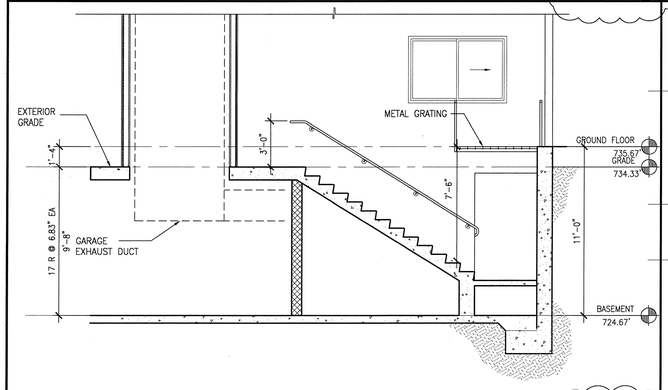

STAIR 7 SECTION

Scale 1/4" = 1'-0" — 11 — DWG

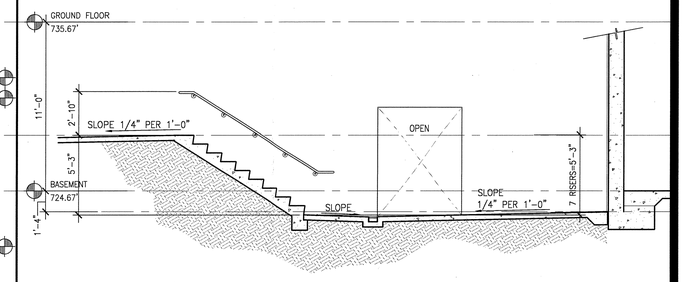

9

STAIR 2 SECTION

Scale 1/4" = 1'-0" — 3 — DWG

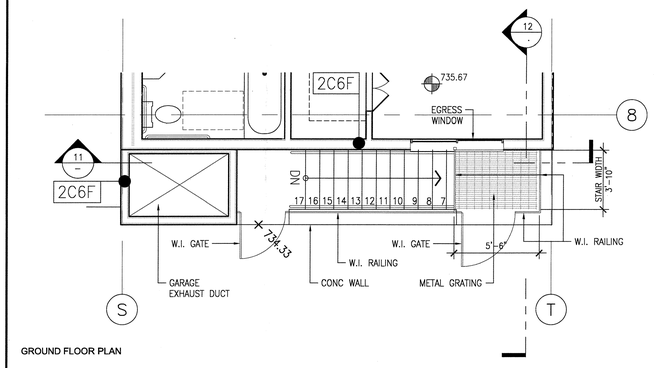

GROUND FLOOR PLAN

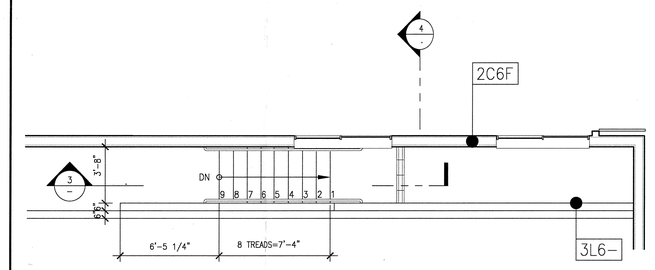

B. GROUND LEVEL

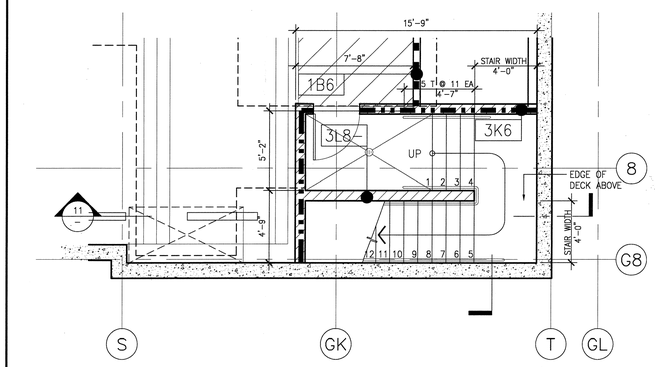

BASEMENT PLAN

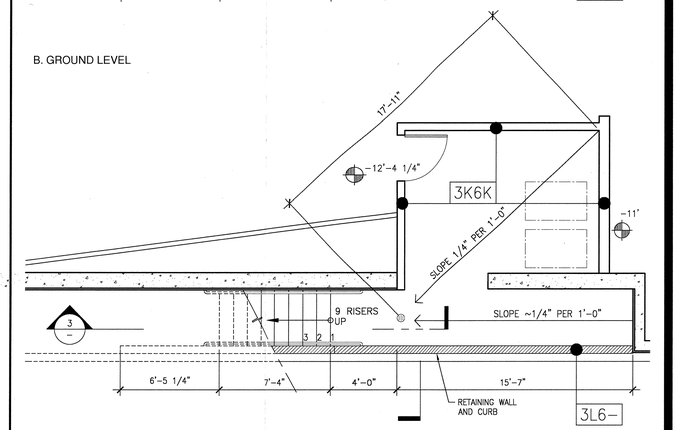

A. BASEMENT

9

STAIR 7 - PLANS

Scale 1/4" = 1'-0" — 9 — DWG

STAIR 2 - PLANS

Scale 1/4" = 1'-0" — 1 — DWG

WWC OT
Widom Wein Cohen O'Leary Terasawa

3130 Wilshire Boulevard
Sixth Floor
Santa Monica, California 90403
T (310) 828-0040
F (310) 453-9432
www.wwcot.com

Inland Empire
Palm Springs
Moorpark
Shanghai, China

RECEIVED
10:08 am, Aug 14, 2008
FRAMEMAX

Building Department Submittal: June 1, 2007
Issued For Bid: _____
Issued For Construction: January 29, 2008

9 6-2-2008 STAIR #7 REVISIONS

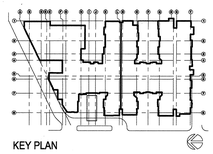

KEY PLAN

RECEIVED
JUN 06 2008
SUFFOLK CONSTRUCTION

Project:
Jewish Home for The Aging
FOUNTAINVIEW AT EISENBERG VILLAGE

6440 Wilbur Ave
Reseda, CA. 91335

JEWISH HOME FOR THE AGING
18855 Victory Blvd.
Reseda, CA 91335

Project Number: 04206.00

STAIR 2 & 7 PLANS & SECTIONS

Date: 01/21/2008
Drawn By: _____
Checked By: _____

A7.11.2

Sheet No.

File Path & Name: F:\PROJECTS\04206-00\A-CD\SHEETS\A7.11.2.DWG
© WWCOT 2006 Jun 05, 2008 - 10:41 am

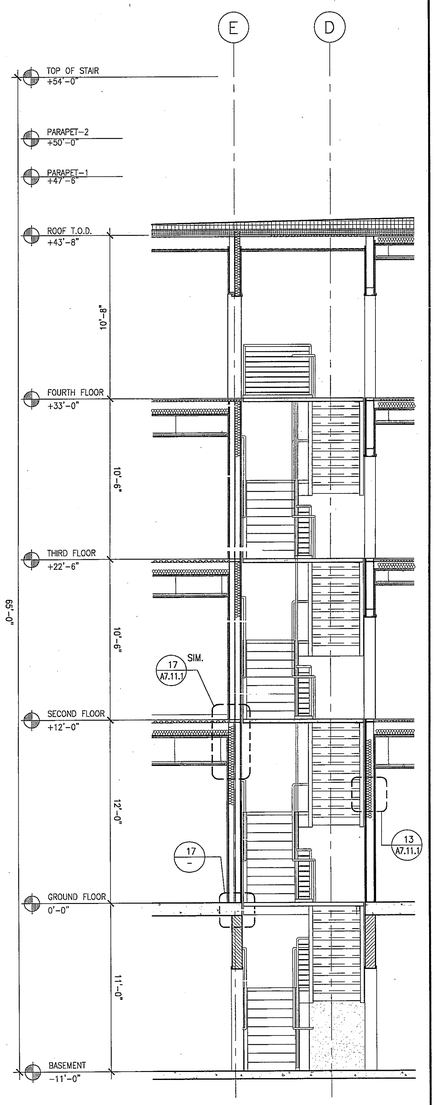

STAIR 3 -SECTION — Scale 1/4" = 1'-0" — 18

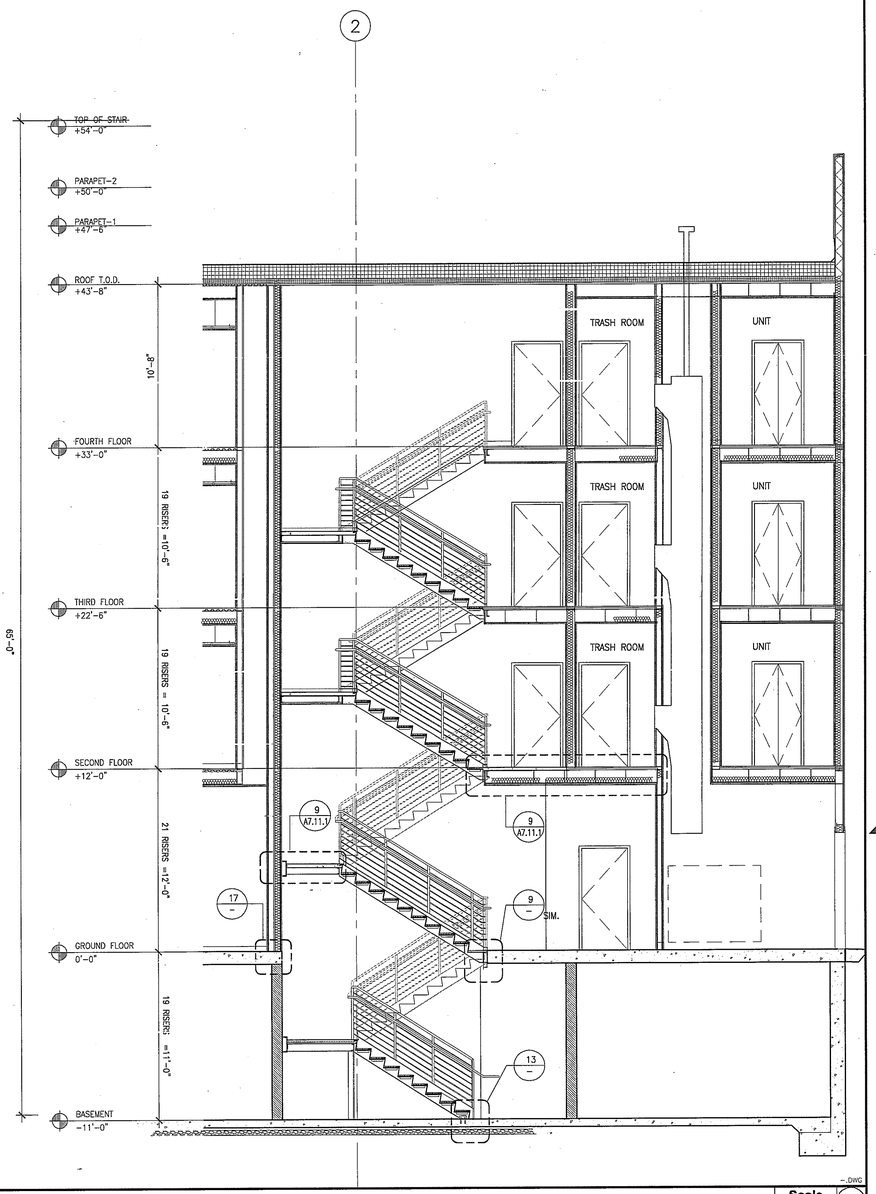

STAIR 3- SECTION — Scale 1/4" = 1'-0" — 10

TRANSITION AT FLOOR SLAB — Scale 3" = 1'-0" — 17

STRINGER-BOTTOM — Scale 3" = 1'-0" — 13

LANDING @ CONCRETE — Scale 3" = 1'-0" — 9

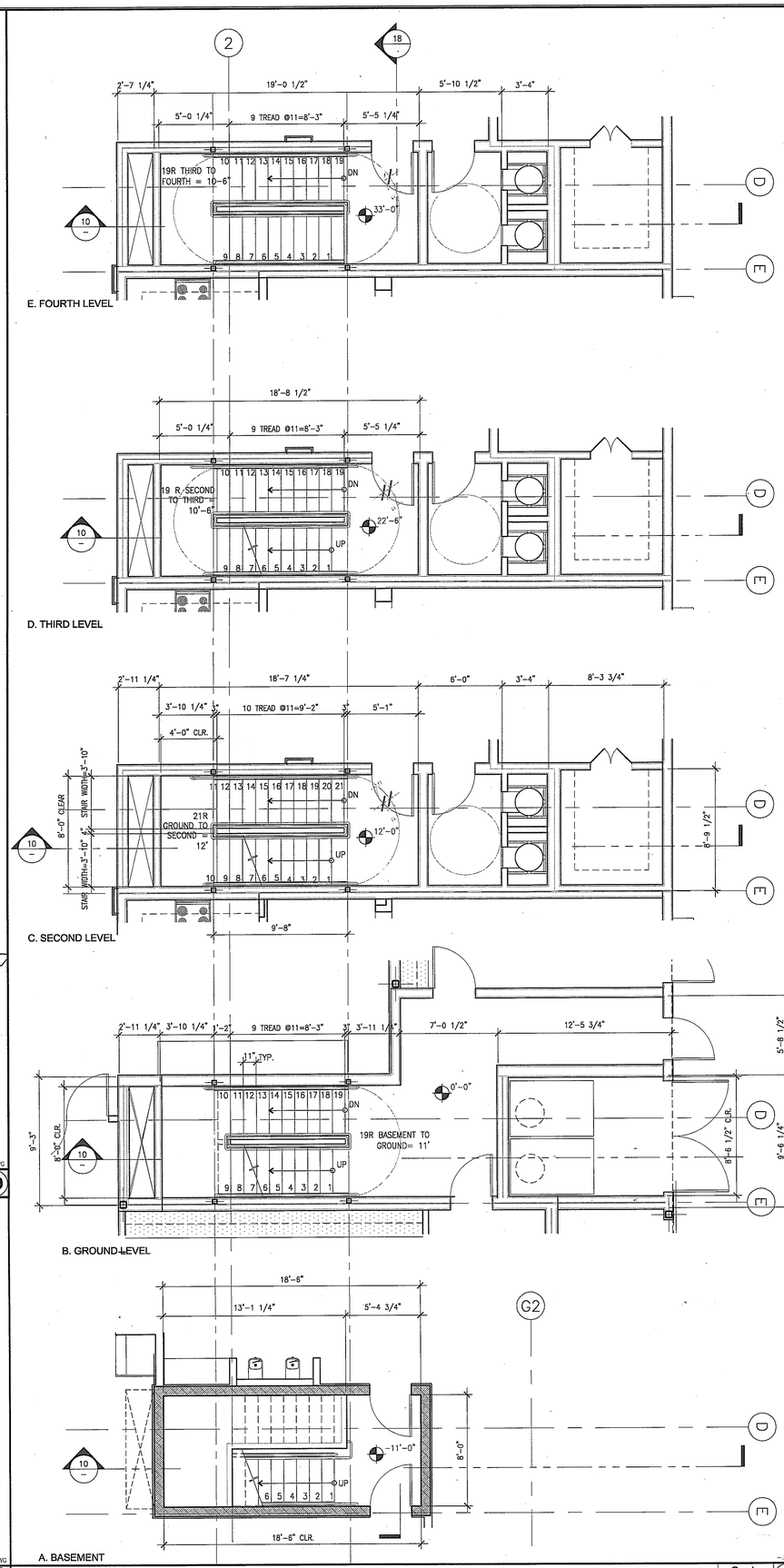

STAIR 3 - FLOOR PLANS — Scale 1/4" = 1'-0" — 1

WWC OT
Widom Wein Cohen O'Leary Terasawa
3130 Wilshire Boulevard
Sixth Floor
Santa Monica, California 90403
T (310) 828-0040
F (310) 453-9432
www.wwcot.com
Inland Empire
Palm Springs
Moorpark
Shanghai, China

RECEIVED
10:08 am, Aug 14, 2008
FRAMEMAX

Building Department Submittal: June 1, 2007
Issued For Bid:
Issued For Construction:

KEY PLAN

Project:
Jewish Home for The Aging
FOUNTAINVIEW
AT EISENBERG VILLAGE
6440 Wilbur Ave
Reseda, CA. 91335

JEWISH HOME
JEWISH HOME FOR THE AGING
18855 Victory Blvd.
Reseda, CA 91335
Project Number: 04206.00

STAIR 3
& TRASH ENCLOSURE

Date: 04/05/2007
Drawn By:
Checked By:

A7.11.3
Sheet No.

File Path & Name: F:\PROJECTS\04206-00\A-CD\SHEETS\A7.11.3.DWG
© WWCOT 2006 May 28, 2007 - 03:50 pm

RECEIVED BY SUFFOLK ON 06/01/07

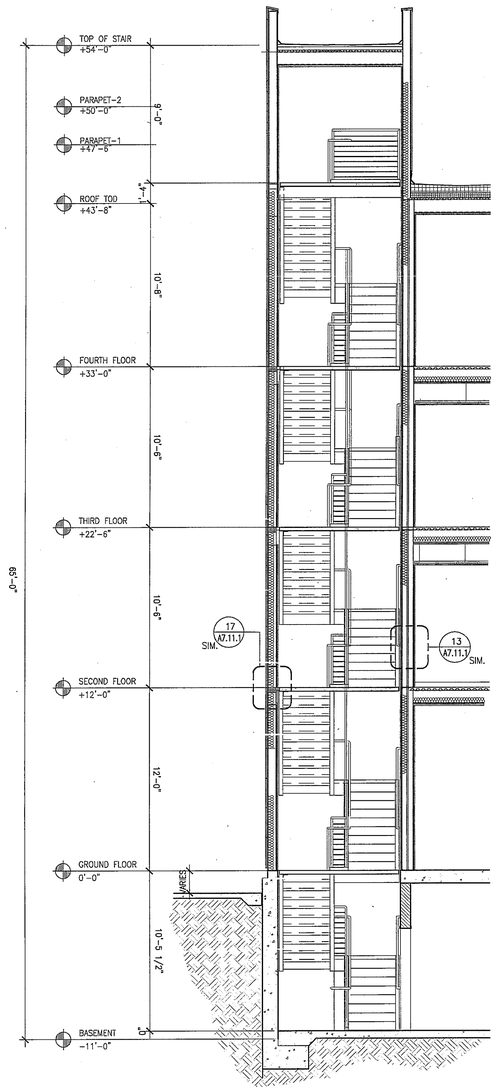

STAIR 4-SECTION — Scale 1/4" = 1'-0" — 14 — _.DWG

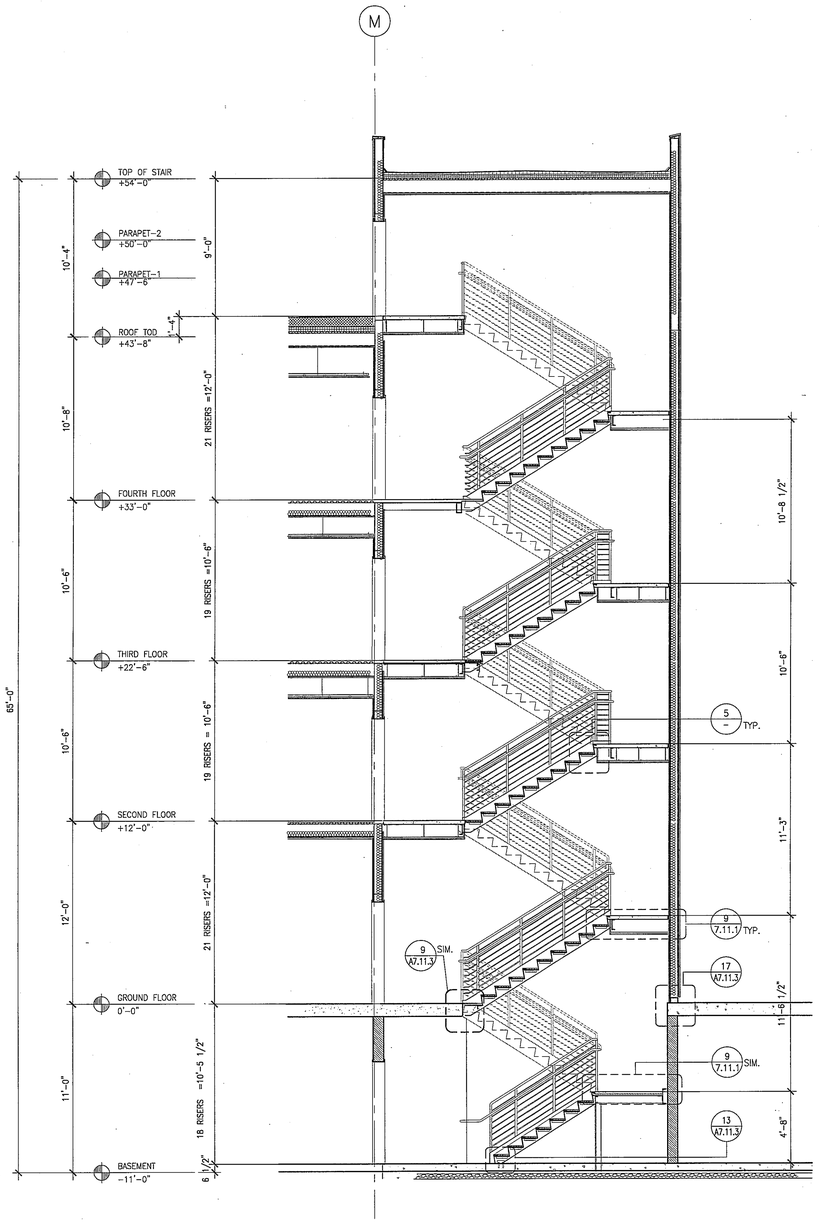

STAIR 4 -SECTION — Scale 1/4" = 1'-0" — 6 — _.DWG

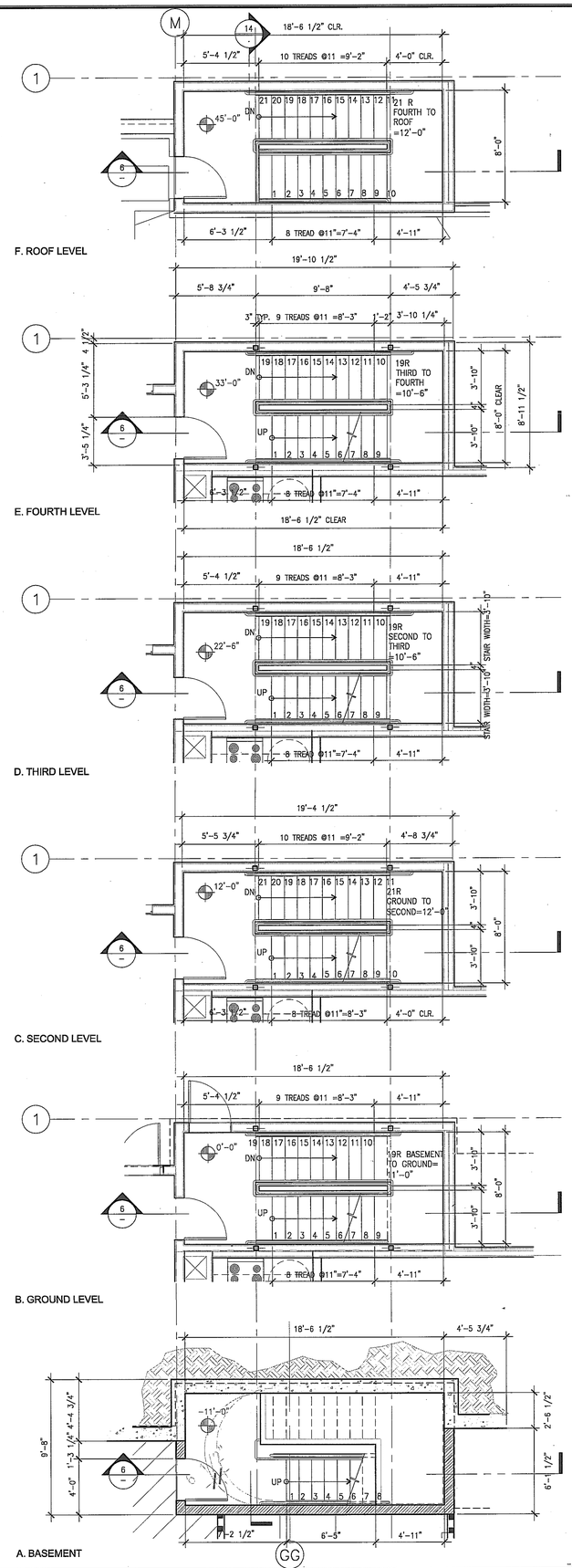

STAIR 4- FLOOR PLANS — Scale 1/4" = 1'-0" — 1 — _.DWG

NOT USED — Scale — 13 — _.DWG

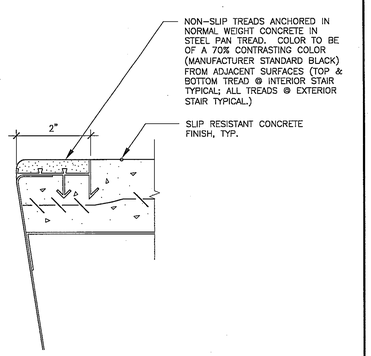

Stair Nosing — Scale 1/2" =1'-0" — 9

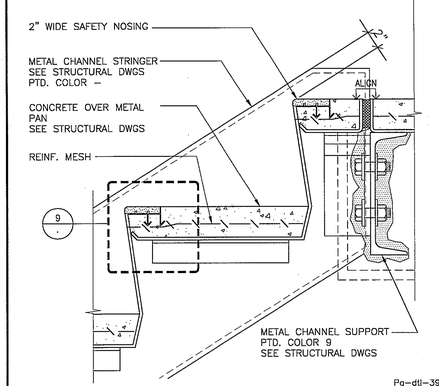

Pg-dtl-39

Upper Landing Section — Scale 3"=1'-0" — 5

WWC OT
Widom Wein Cohen O'Leary Terasawa
3130 Wilshire Boulevard
Sixth Floor
Santa Monica, California 90403
T (310) 828-0040
F (310) 453-9432
www.wwcot.com

Inland Empire
Palm Springs
Moorpark
Shanghai, China

RECEIVED
10:08 am, Aug 14, 2008
FRAMEMAX

Building Department Submittal: June 1, 2007
Issued For Bid:
Issued For Construction:

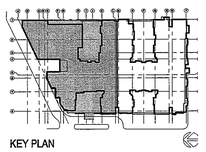

KEY PLAN

Project:
Jewish Home for The Aging
FOUNTAINVIEW AT EISENBERG VILLAGE
6440 Wilbur Ave
Reseda, CA. 91335

JEWISH HOME FOR THE AGING
18855 Victory Blvd.
Reseda, CA 91335
Project Number: 04206.00

STAIR #4
PLANS
& SECTIONS
Date: 04/05/2007
Drawn By:
Checked By:

A7.11.4
Sheet No.

File Path & Name: F:\PROJECTS\04206-00\A-CD\SHEETS\A7.11.4.DWG
© WWCOT 2006 May 28, 2007 - 03:50 pm

RECEIVED BY SUFFOLK ON 06/01/07

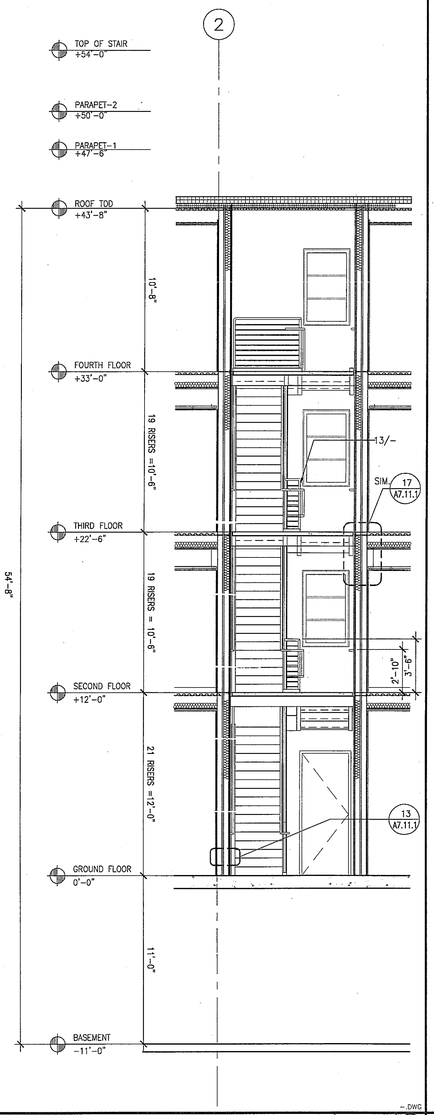

STAIR 5-SECTION — Scale 1/4" = 1'-0" — 18

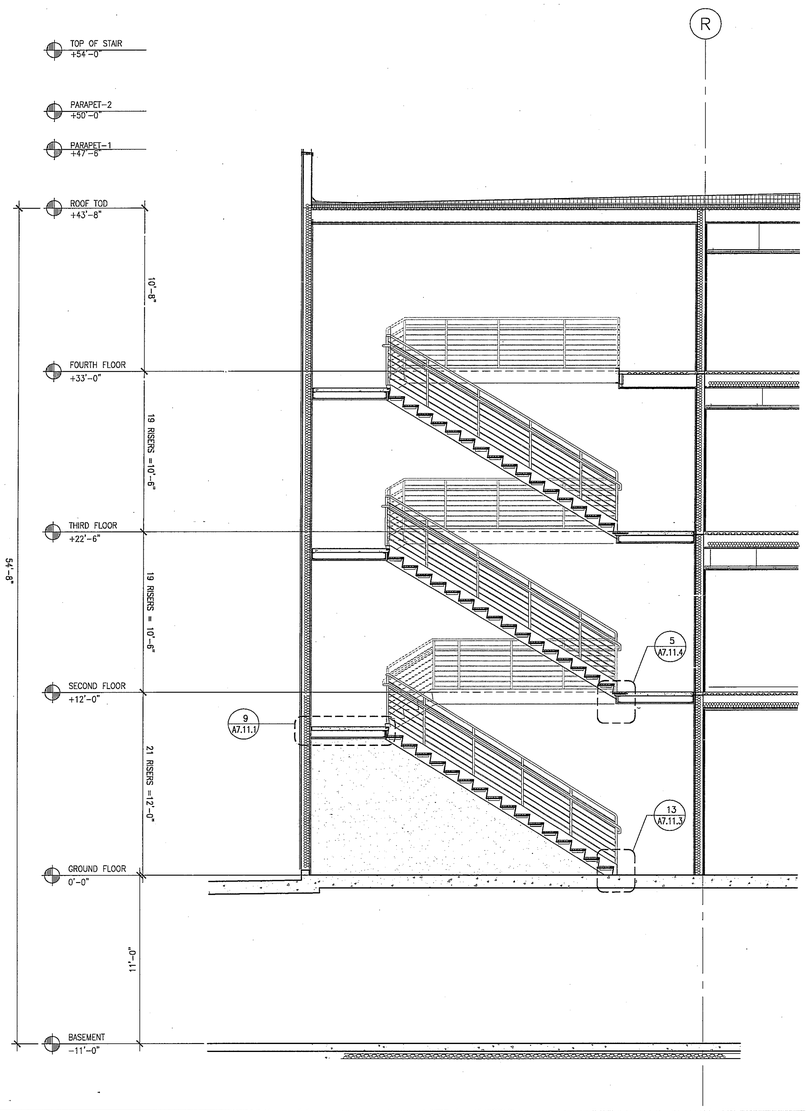

STAIR 5 -SECTION — Scale 1/4" = 1'-0" — 10

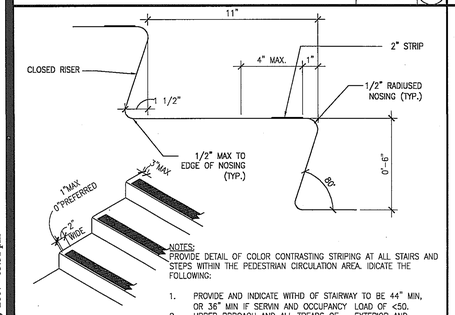

NOTES:
PROVIDE DETAIL OF COLOR CONTRASTING STRIPING AT ALL STAIRS AND STEPS WITHIN THE PEDESTRIAN CIRCULATION AREA. IDICATE THE FOLLOWING:

1. PROVIDE AND INDICATE WITHD OF STAIRWAY TO BE 44" MIN, OR 36" MIN IF SERVIN AND OCCUPANCY LOAD OF <50.
2. UPPER PPROACH AND ALL TREADS OF EXTERIOR AND INTERIOR STAIRS MUST HAVE A 2" MIN WIDE STRIP OF CONTRASTING COLOR.
3. COLOR STRIP MUST BE SOLID 2" AND CONTRAST MUST BE 70% MIN.
4. GROOVED STRIPES SHOULD NOT BE USED ON EXTERIOR STAIRS.
5. THE STRIP SHOULD BE INSTALLED AS CLOSE AS POSSIBLE TO, BUT NEVER MORE THAN 1" FROM THE EDGE OF THE NOSING.

STRIP DETAIL — Scale NTS — 17

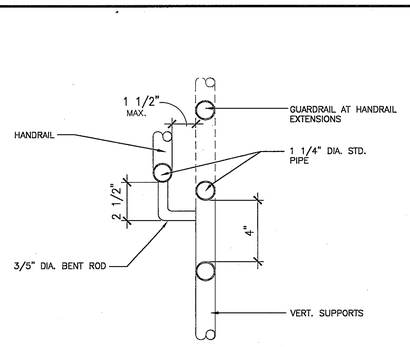

05510059

RAIL DETAIL — Scale 3" = 1'-0" — 13

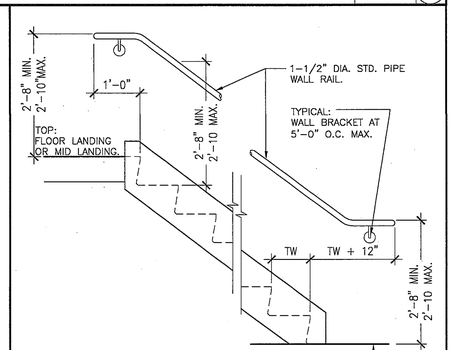

NOTE:
TW = TREAD WIDTH

TYP. RAIL WALL ELEVATION — Scale 3/4" = 1'-0" — 9

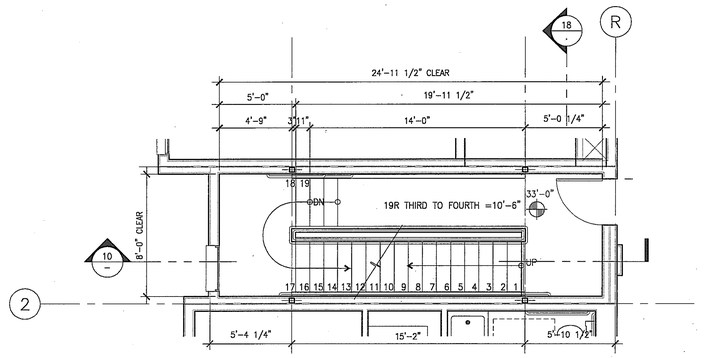

D. FOURTH LEVEL

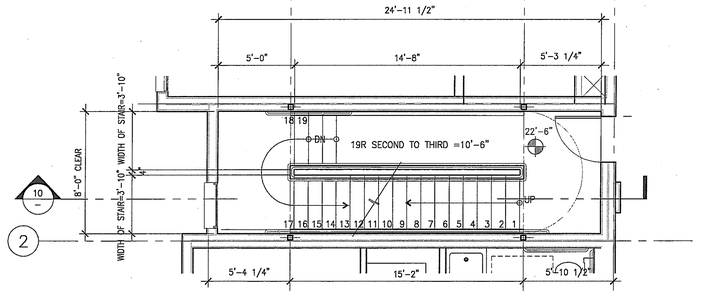

C. THIRD LEVEL

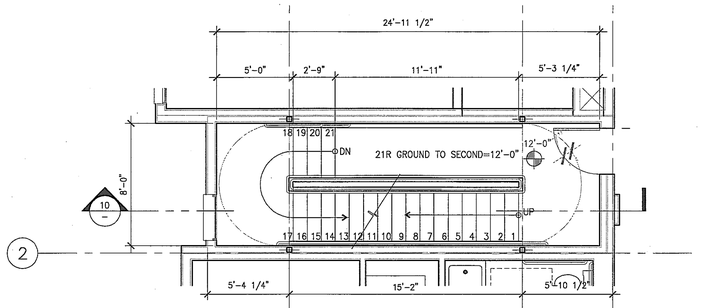

B. SECOND LEVEL

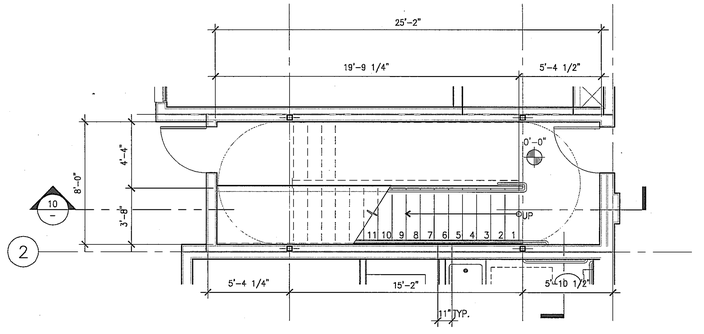

A. GROUND LEVEL

STAIR5-FLOOR PLANS — Scale 1/4" = 1'-0" — 1

WWC OT
Widom Wein Cohen O'Leary Terasawa

3130 Wilshire Boulevard
Sixth Floor
Santa Monica, California 90403
T (310) 828-0040
F (310) 453-9432
www.wwcot.com

Inland Empire
Palm Springs
Moorpark
Shanghai, China

RECEIVED
10:08 am, Aug 14, 2008
FRAMEMAX

Building Department Submittal: June 1, 2007
Issued For Bid:
Issued For Construction:

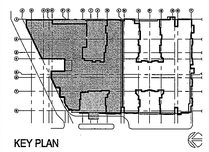

KEY PLAN

Project:
Jewish Home for The Aging
FOUNTAINVIEW AT EISENBERG VILLAGE

6440 Wilbur Ave
Reseda, CA. 91335

JEWISH HOME FOR THE AGING
18855 Victory Blvd.
Reseda, CA 91335
Project Number: 04206.00

STAIR 5 PLANS & SECTIONS

Date: 04/05/2007
Drawn By:
Checked By:

A7.11.5
Sheet No.

File Path & Name: P:\PROJECTS\04206-00\A-CD\SHEETS\A7.11.5.DWG
© WWCOT 2006 May 29, 2007 - 03:51 pm

RECEIVED BY SUFFOLK ON 06/01/07

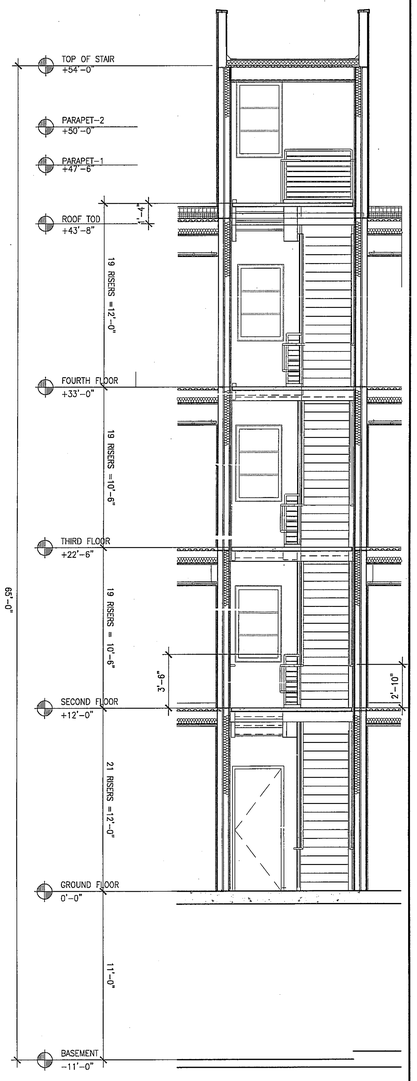

STAIR6-SECTION

Scale 1/4" = 1'-0" | 18

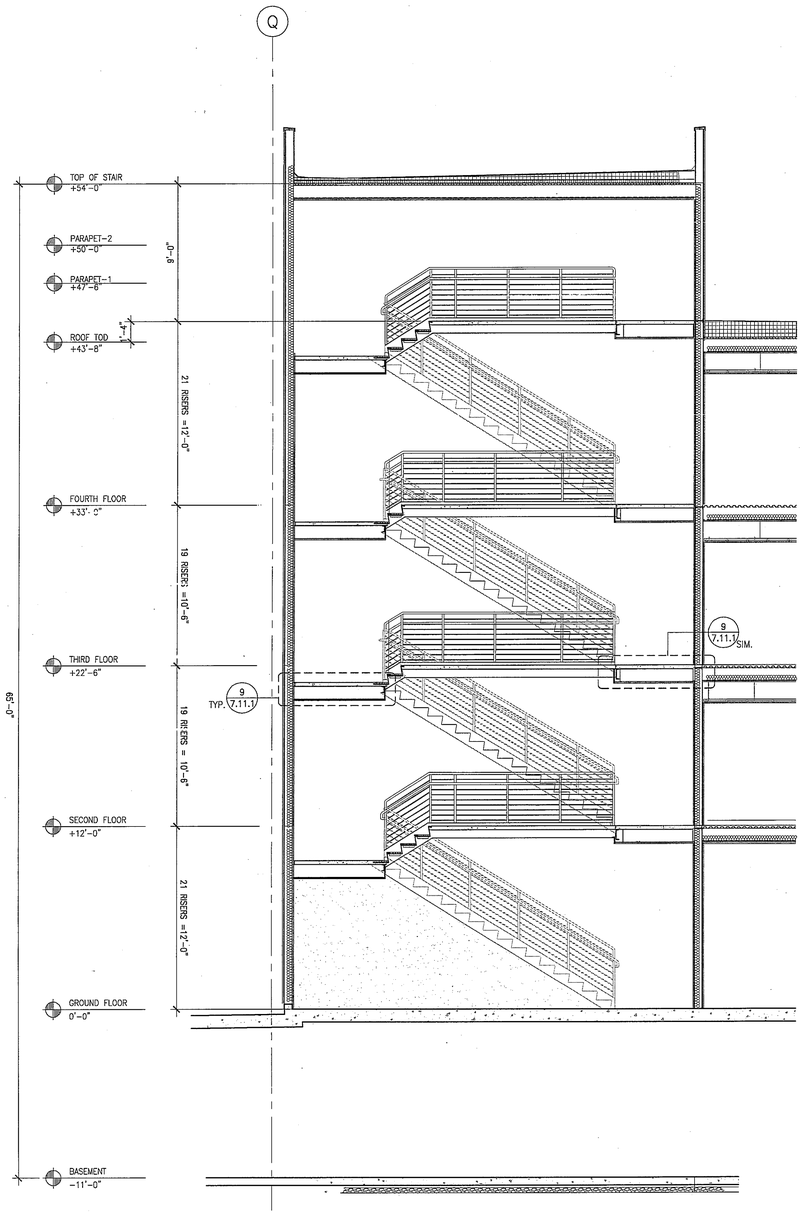

STAIR 5 -SECTION

Scale 1/4" = 1'-0" | 10

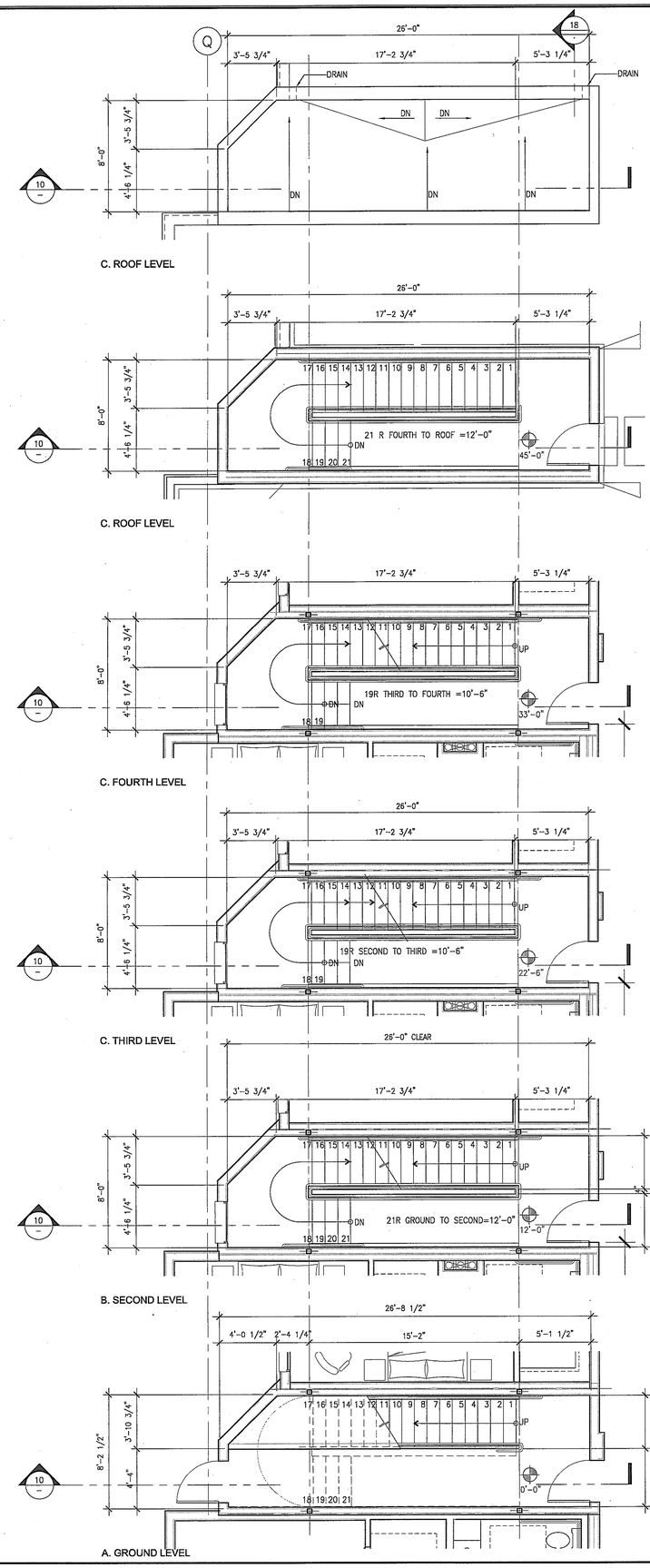

STAIR6-FLOOR PLANS

Scale 1/4" = 1'-0" | 1

WWCOT
Widom Wein Cohen O'Leary Terasawa

3130 Wilshire Boulevard
Sixth Floor
Santa Monica, California 90403
T (310) 828-0040
F (310) 453-9432
www.wwcot.com

Inland Empire
Palm Springs
Moorpark
Shanghai, China

RECEIVED
10:08 am, Aug 14, 2008
FRAMEMAX

Building Department Submittal: June 1, 2007
Issued For Bid:
Issued For Construction:

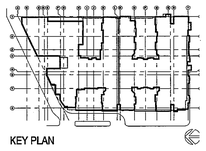

KEY PLAN

Project:
Jewish Home for The Aging
FOUNTAINVIEW AT EISENBERG VILLAGE
6440 Wilbur Ave
Reseda, CA. 91335

JEWISH HOME FOR THE AGING
18855 Victory Blvd.
Reseda, CA 91335
Project Number: 04206.00

STAIR 6
PLANS
& SECTIONS

Date: 04/05/2007
Drawn By:
Checked By:

A7.11.6
Sheet No.

File Path & Name: F:\PROJECTS\04206.00\A-CD\SHEETS\A7.11.6.DWG
© WWCOT 2006 May 28, 2007 - 03:51 pm

RECEIVED BY SUFFOLK ON 06/01/07

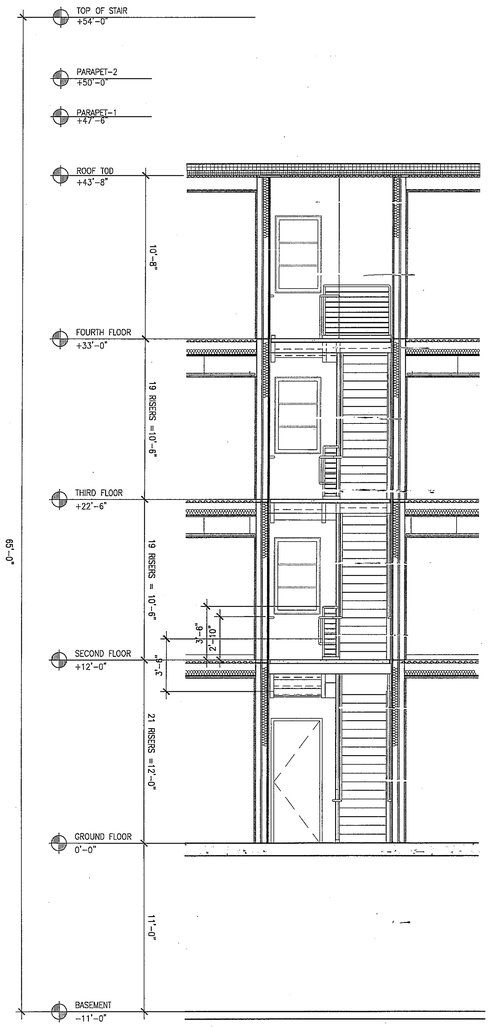

STAIR 8-SECTION

Scale 1/4" = 1'-0" 18

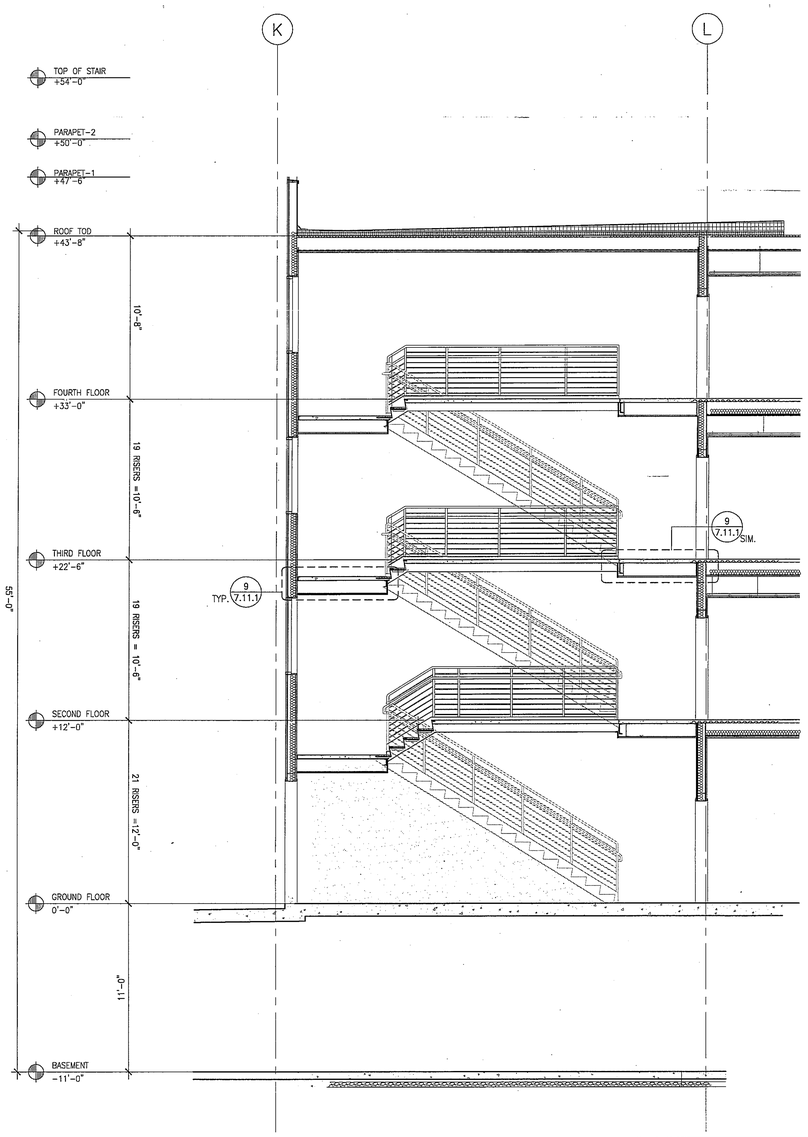

STAIR 8 -SECTION

Scale 1/4" = 1'-0" 10

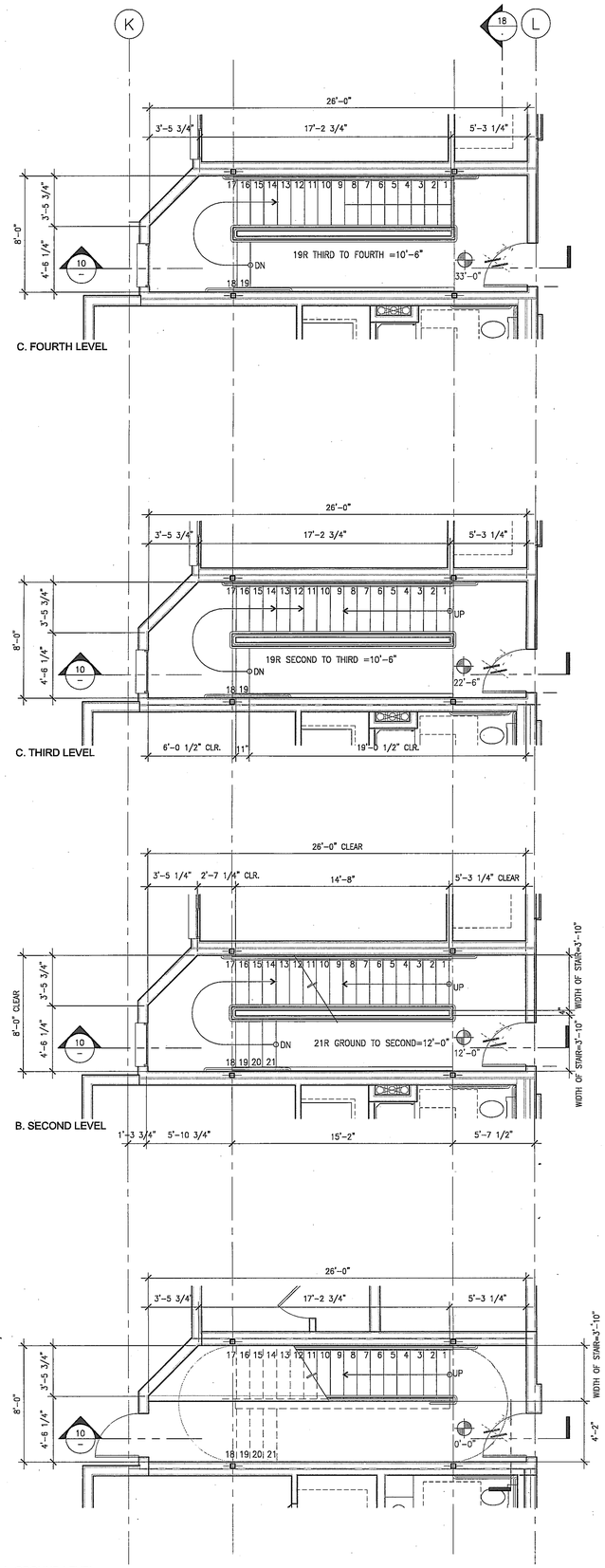

STAIR 8- FLOOR PLANS

Scale 1/4" = 1'-0" 1

WWC OT
Widom Wein Cohen O'Leary Terasawa

3130 Wilshire Boulevard
Sixth Floor
Santa Monica, California 90403
T (310) 828-0040
F (310) 453-9432
www.wwcot.com

Inland Empire
Palm Springs
Moorpark
Shanghai, China

RECEIVED
10:08 am, Aug 14, 2008
FRAMEMAX

Building Department Submittal: June 1, 2007
Issued For Bid:
Issued For Construction:

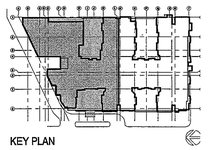

KEY PLAN

Project:
Jewish Home for The Aging
FOUNTAINVIEW AT EISENBERG VILLAGE

6440 Wilbur Ave
Reseda, CA. 91335

JEWISH HOME
JEWISH HOME FOR THE AGING
18855 Victory Blvd.
Reseda, CA 91335
Project Number: 04206.00

STAIR #8
PLANS
& SECTIONS

Date: 04/05/2007
Drawn By:
Checked By:

A7.11.7
Sheet No.

File Path & Name: F:\PROJECTS\04206-00\A-CD\SHEETS\A7.11.7.DWG
© WWCOT 2006 May 28, 2007 - 03:51 pm

RECEIVED BY SUFFOLK ON 06/01/07

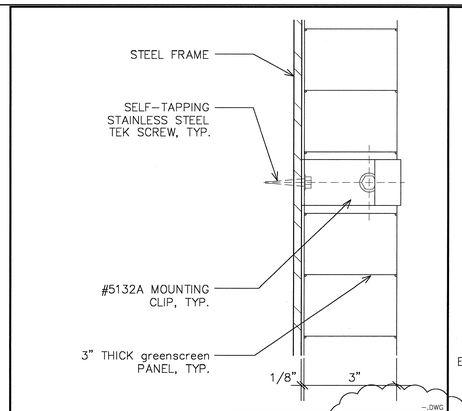

Green Screen to Steel Post — Scale 6" = 1'-0" — 8

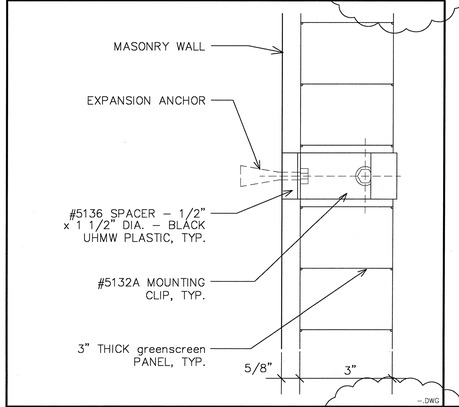

Green Screen to CMU Wall — Scale 6" = 1'-0" — 7

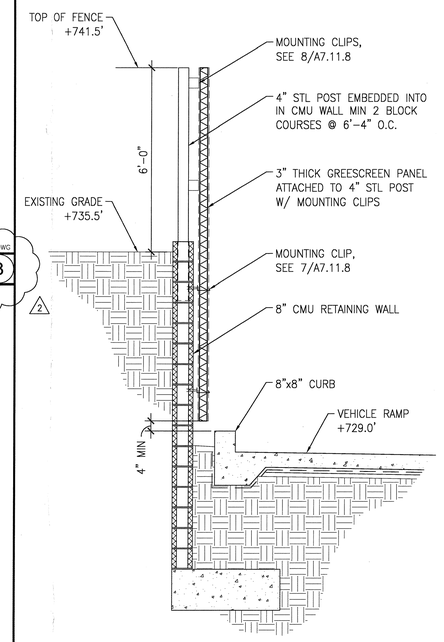

Green Screen Detail — Scale 1/2" = 1'-0" — 3

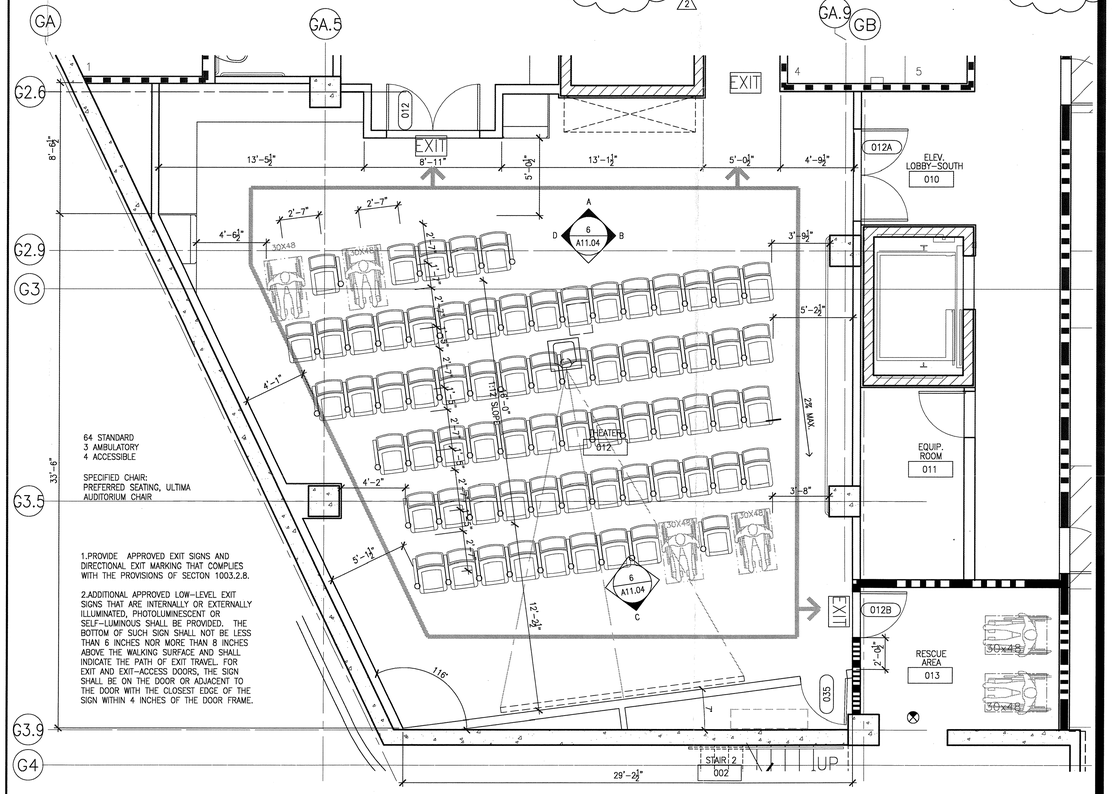

ENLARGED FLOOR PLAN - THEATER ROOM # 012 — Scale 1/4" = 1'-0" — 1

WWCOT
Widom Wein Cohen O'Leary Terasawa

3130 Wilshire Boulevard
Sixth Floor
Santa Monica, California 90403
T (310) 828-0040
F (310) 453-9432
www.wwcot.com

Inland Empire
Palm Springs
Moorpark
Shanghai, China

RECEIVED
10:08 am, Aug 14, 2008
FRAMEMAX

Building Department Submittal: June 1, 2007
Issued For Bid: ———
Issued For Construction: January 29, 2008

2 04-21-2008 GREENSCREEN REVISIONS

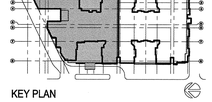

KEY PLAN

Project:
Jewish Home for The Aging
FOUNTAINVIEW AT EISENBERG VILLAGE
6440 Wilbur Ave
Reseda, CA. 91335

JEWISH HOME FOR THE AGING
18855 Victory Blvd.
Reseda, CA 91335
Project Number: 04206.00

ENLARGED PLAN THEATER ROOM # 012

Date: 01/21/2008
Drawn By: ———
Checked By: ———

A7.11.8
Sheet No.

RECEIVED
APR 30 2008
SUFFOLK CONSTRUCTION

File Path & Name: F:\PROJECTS\04206-00\A-CD\SHEETS\A7.11.8.DWG
© WWCOT 2006 Apr 25, 2008 - 02:01 pm

DOOR SCHEDULE

DOOR NO	DOOR DIMENSION				DOOR		FRAME		DETAILS ON SHEET A8.01 U.N.O.				HARD WARE	FIRE RATING	REMARKS
	WIDTH	HEIGHT	THICK	TYPE	MATERIAL	FINISH	MATERIAL	TYPE	HEAD	JAMB	SILL	OTHER			
STAIRS															
S-001	3'-0"	6'-8"	1-¾"	I	HM		HM	F5	18/A8.04		3A/A8.05			90 MIN.	PANIC HARDWARE
S-003	3'-0"	6'-8"	1-¾"	I	HM		HM	F5	18/A8.04		3A/A8.05			90 MIN.	PANIC HARDWARE
S-003A	3'-0"	6'-8"	1-¾"	I	HM		HM	F5	18/A8.04		3A/A8.05			90 MIN.	PANIC HARDWARE
S-004	3'-0"	6'-8"	1-¾"	I	HM		HM	F5	18/A8.04		3A/A8.05			90 MIN.	PANIC HARDWARE
S-007	3'-0"	6'-8"	1-¾"	I	HM		HM	F5	11/A8.04		3A/A8.05			90 MIN.	PANIC HARDWARE
S-101	3'-0"	6'-8"	1-⅜"	I	HM		HM	F5	11/A8.04		11A/A8.05			90 MIN.	PANIC HARDWARE
S-101A	3'-0"	8'-0"	1-⅜"	B	HM		HM	F1	3/A8.04		5/A8.05		41	NON-RATED	PANIC HARDWARE
S-103	3'-0"	8'-0"	1-¾"	B	HM		HM	F1	5/A8.04		1/A8.04		41	NON-RATED	PANIC HARDWARE
S-104	3'-0"	6'-8"	1-¾"	I	HM		HM	F5	11/A8.04		11A/A8.05		31	90 MIN.	PANIC HARDWARE
S-104A	3'-0"	8'-0"	1-¾"	B	HM		HM	F1	3/A8.04		5/A8.04		01	NON-RATED	PANIC HARDWARE
S-105	3'-0"	6'-8"	1-¾"	I	HM		HM	F5	11/A8.04		11A/A8.05		31	90 MIN.	PANIC HARDWARE
S-105A	3'-0"	6'-8"	1-¾"	I	HM		HM	F5	11/A8.04		5/A8.05		01A	NON-RATED	PANIC HARDWARE
S-106	3'-0"	6'-8"	1-¾"	I	HM		HM	F5	11/A8.04		11A/A8.05			90 MIN.	PANIC HARDWARE
S-106A	3'-0"	8'-0"	1-¾"	B	HM		HM	F1	11/A8.04		5/A8.05			NON-RATED	PANIC HARDWARE
S-108	3'-0"	6'-8"	1-¾"	I	HM		HM	F5	11/A8.04		11A/A8.05		31	90 MIN.	PANIC HARDWARE
S-108A	3'-0"	8'-0"	1-¾"	B	HM		HM	F1	11/A8.04		5/A8.05		01	NON-RATED	PANIC HARDWARE
S-201	3'-0"	6'-8"	1-¾"	I	HM		HM	F5	11/A8.04		11A/A8.05		40	90 MIN.	PANIC HARDWARE
S-203	3'-0"	6'-8"	1-¾"	I	HM		HM	F5	11/A8.04		11A/A8.05		40	90 MIN.	PANIC HARDWARE
S-204	3'-0"	6'-8"	1-¾"	I	HM		HM	F5	11/A8.04		11A/A8.05		40	90 MIN.	PANIC HARDWARE
S-205	3'-0"	6'-8"	1-¾"	I	HM		HM	F5	11/A8.04		11A/A8.05		40	90 MIN.	PANIC HARDWARE
S-206	3'-0"	6'-8"	1-¾"	I	HM		HM	F5	11/A8.04		11A/A8.05		40	90 MIN.	PANIC HARDWARE
S-208	3'-0"	6'-8"	1-¾"	I	HM		HM	F5	11/A8.04		11A/A8.05		40	90 MIN.	PANIC HARDWARE
S-301	3'-0"	6'-8"	1-¾"	I	HM		HM	F5	11/A8.04		11A/A8.05		40	90 MIN.	PANIC HARDWARE
S-303	3'-0"	6'-8"	1-¾"	I	HM		HM	F5	11/A8.04		11A/A8.05		40	90 MIN.	PANIC HARDWARE
S-304	3'-0"	6'-8"	1-¾"	I	HM		HM	F5	11/A8.04		11A/A8.05		40	90 MIN.	PANIC HARDWARE
S-305	3'-0"	6'-8"	1-¾"	I	HM		HM	F5	11/A8.04		11A/A8.05		40	90 MIN.	PANIC HARDWARE
S-306	3'-0"	6'-8"	1-¾"	I	HM		HM	F5	11/A8.04		11A/A8.05		40	90 MIN.	PANIC HARDWARE
S-308	3'-0"	6'-8"	1-¾"	I	HM		HM	F5	11/A8.04		11A/A8.05		40	90 MIN.	PANIC HARDWARE
S-401	3'-0"	6'-8"	1-¾"	I	HM		HM	F5	11/A8.04		11A/A8.05		40	90 MIN.	PANIC HARDWARE
S-403	3'-0"	6'-8"	1-¾"	I	HM		HM	F5	11/A8.04		11A/A8.05		40	90 MIN.	PANIC HARDWARE
S-404	3'-0"	6'-8"	1-¾"	I	HM		HM	F5	11/A8.04		11A/A8.05		40	90 MIN.	PANIC HARDWARE
S-405	3'-0"	6'-8"	1-¾"	I	HM		HM	F5	11/A8.04		11A/A8.05		40	90 MIN.	PANIC HARDWARE
S-406	3'-0"	6'-8"	1-¾"	I	HM		HM	F5	11/A8.04		11A/A8.05			90 MIN.	PANIC HARDWARE
S-408	3'-0"	6'-8"	1-¾"	I	HM		HM	F5	11/A8.04		11A/A8.05		40	90 MIN.	PANIC HARDWARE
S-501	3'-0"	6'-8"	1-¾"	I	HM		HM	F5	7/A8.04		9/A8.05		43	90 MIN.	PANIC HARDWARE
S-504	3'-0"	6'-8"	1-¾"	I	HM		HM	F5	7/A8.04		9/A8.05		43	90 MIN.	PANIC HARDWARE
S-506	3'-0"	6'-8"	1-¾"	I	HM		HM	F5	7/A8.04		9/A8.05		43	90 MIN.	PANIC HARDWARE
ELEVATORS FIRE DOORS															
EL-001	3'-10"	7'-0"	1-¾"	L	HM		HM	F7					12	90 MIN.	SMOKE DOOR
EL-004	3'-10"	7'-0"	1-¾"	L	HM		HM	F7					12	90 MIN.	SMOKE DOOR
EL-101	3'-10"	7'-0"	1-¾"	L	HM		HM	F7					12	90 MIN.	SMOKE DOOR
EL-102	3'-10"	7'-0"	1-¾"	L	HM		HM	F7					12	90 MIN.	SMOKE DOOR
EL-103	3'-10"	7'-0"	1-¾"	L	HM		HM	F7					12	90 MIN.	SMOKE DOOR
EL-104	3'-10"	7'-0"	1-¾"	L	HM		HM	F7					12	90 MIN.	SMOKE DOOR
EL-201	3'-10"	7'-0"	1-¾"	L	HM		HM	F7					12	90 MIN.	SMOKE DOOR
EL-202	3'-10"	7'-0"	1-¾"	L	HM		HM	F7					12	90 MIN.	SMOKE DOOR
EL-203	3'-10"	7'-0"	1-¾"	L	HM		HM	F7					12	90 MIN.	SMOKE DOOR
EL-204	3'-10"	7'-0"	1-¾"	L	HM		HM	F7					12	90 MIN.	SMOKE DOOR
EL-301	3'-10"	7'-0"	1-¾"	L	HM		HM	F7					12	90 MIN.	SMOKE DOOR
EL-302	3'-10"	7'-0"	1-¾"	L	HM		HM	F7					12	90 MIN.	SMOKE DOOR
EL-303	3'-10"	7'-0"	1-¾"	L	HM		HM	F7					12	90 MIN.	SMOKE DOOR
EL-304	3'-10"	7'-0"	1-¾"	L	HM		HM	F7					12	90 MIN.	SMOKE DOOR
EL-401	3'-10"	7'-0"	1-¾"	L	HM		HM	F7					12	90 MIN.	SMOKE DOOR
EL-402	3'-10"	7'-0"	1-¾"	L	HM		HM	F7					12	90 MIN.	SMOKE DOOR
EL-403	3'-10"	7'-0"	1-¾"	L	HM		HM	F7					12	90 MIN.	SMOKE DOOR
EL-404	3'-10"	7'-0"	1-¾"	L	HM		HM	F7					12	90 MIN.	SMOKE DOOR
UNIT DOORS GROUND THRU FOURTH LEVELS (SEE ENLARGED FLOOR PLANS AND SHEET A8.2)															
O	3'-0"	8'-8"	1-¾"	O	S.C.WD.		WD	F16					U-01	20 MIN.	
P	3'-0"	6'-8"	1-¾"	P	H.C.WD.		HM	F16					U-02	NON-RTD	
Q	SEE PLAN	6'-8"	1-¾"	Q	H.C.WD.		WD	F18					U-03	NON-RTD	
R	2'-6"	6'-8"	1-⅜"	R	H.C.WD.		WD	NA						NON-RTD	BI-FOLD
S	SEE PLAN	6'-8"	1-⅜"	S	H.C.WD.		WD	NA						NON-RTD	BI-FOLD
T															NOT USED
U															NOT USED
V	PR. 3'-0"	8'-0"	1-¾"	V	H.C.WD.		WD	F17	14-16/A8.04		9+13/A8.04			NON-RTD	SOUND DOOR**
W	3'-0"	6'-8"	1-¾"	W	H.C.WD.		WD	F17						NON-RTD	POCKET DOOR**
X															NOT USED
Y	PR. 4'-0"	8'-0"	1-¾"	Y	H.C.WD.		WD	F17	14-16/A8.04		13/A8.04			NON-RTD	SLIDING DOOR
Z	5'-6"	8'-0"	1-¾"	Z	H.C.WD.		WD	F19						NON-RTD	

1/4" TEMPERED GLASS, AT ALL DOORS, UNLESS NOTED OTHERWISE.

TYP. UNIT FLOOR DOOR TYPES SEE SHEETS A7.1 AND A7.2

** FOR POCKET DOORS PROVIDE 32" CLEAR SPACE WHEN FULLY OPEN, TYP.

DOOR SCHEDULE — Scale X" = 1'-0" — 13

DOOR SCHEDULE

DOOR NO	DOOR DIMENSION				DOOR		FRAME		DETAILS ON SHEET A8.01 U.N.O.				HARD WARE	FIRE RATING	REMARKS
	WIDTH	HEIGHT	THICK	TYPE	MATERIAL	FINISH	MATERIAL	TYPE	HEAD	JAMB	SILL	OTHER			
BASEMENT LEVEL															
010	3'-0"	6'-8"	1-¾"	I	HM		HM	F5			12/A8.05		16F	3 HR.	
011	3'-0"	6'-8"	1-¾"	I	HM		HM	F5	11/A8.04		11A/A8.05		21	–	
012	6'-0"	6'-8"	1-¾"	J	ALU		ALU	F6			7/A8.05		14	–	
012A	6'-0"	6'-8"	1-¾"	J	ALU		ALU	F6			7/A8.05		14	–	
012B	3'-0"	6'-8"	1-¾"	I	HM		HM	F5			12/A8.05		16F	3 HR.	
														–	
014	3'-0"	6'-8"	1-⅜"	I	HM		HM	F5	11/A8.04		11A/A8.05		19F	60 MIN.	
015	3'-0"	6'-8"	1-¾"	I	HM		HM	F5	11/A8.04		12/A8.05		16F	3 HR.	
016	3'-0"	6'-8"	1-¾"	I	HM		HM	F5	11/A8.04		11/A8.05		20	–	
017	3'-0"	6'-8"	1-¾"	I	HM		HM	F5	11/A8.04		11/A8.05		20	–	
018	3'-0"	6'-8"	1-¾"	I	HM		HM	F5	11/A8.04		11A/A8.05		19F	60 MIN.	
019	3'-0"	6'-8"	1-¾"	I	HM		HM	F5	11/A8.04		7/A8.05		19NR	–	
020	3'-0"	6'-8"	1-¾"	I	HM		HM	F5	11/A8.04		11/A8.05		22	–	
021	3'-0"	6'-8"	1-¾"	I	HM		HM	F5	11/A8.04		11/A8.05		22	–	
022	3'-0"	6'-8"	1-¾"	I	HM		HM	F5	11/A8.04		7/A8.05		19NR	–	
														–	
024	3'-0"	6'-8"	1-¾"	I	HM		HM	F5	11/A8.04		3A/A8.05		18F	60 MIN.	
025	3'-0"	6'-8"	1-¾"	I	HM		HM	F5	11/A8.04		3A/A8.05		18F	60 MIN.	
026	3'-0"	6'-8"	1-¾"	I	HM		HM	F5	11/A8.04		3A/A8.05		18F	–	
027	3'-0"	6'-8"	1-¾"	I	HM		HM	F5					18F	60 MIN.	
028	3'-0"	6'-8"	1-¾"	I	HM		HM	F5	11/A8.04		3A/A8.05		18F	–	
029	PR. 3'-0"	6'-8"	1-¾"	H	ALU		ALU	F6					17F	90 MIN.	
030	3'-0"	6'-8"	1-¾"	I	HM		HM	F5	11/A8.04		3A/A8.05		19F	60 MIN.	
031	3'-0"	6'-8"	1-¾"	I	HM		HM	F5	11/A8.04		3A/A8.05		18F	–	
032	3'-0"	6'-8"	1-¾"	I	HM		HM	F5	11/A8.04		3A/A8.05		18F	–	
033	3'-0"	6'-8"	1-¾"	I	HM		HM	F5	11/A8.04		3A/A8.05		19F	60 MIN.	
034	3'-0"	6'-8"	1-¾"	I	HM		HM	F5	11/A8.04		3A/A8.05		19F	60 MIN.	
035	3'-0"	6'-8"	1-¾"	I	HM		HM	F5	11/A8.04		3A/A8.05		38		
GROUND LEVEL															
120	3'-0"	6'-8"	1-¾"	I	HM		HM	F5	11/A8.04		10A/A8.05		22	–	
121	PR. 3'-0"	6'-8"	1-¾"	J	HM		HM	F6	11/A8.04		7/A8.05		32	60 MIN.	PANIC HARDWARE
121A	3'-0"	6'-8"	1-¾"	K	H.C.WD.		WD	F5	11/A8.04		10A/A8.05		22	–	
121B	3'-0"	6'-8"	1-¾"	K	H.C.WD.		WD	F5	11/A8.04		4/A8.05		22	–	
121C	3'-0"	6'-8"	1-⅜"	K	H.C.WD.		WD	F5	11/A8.04		4/A8.05		22	–	
121D	3'-0"	6'-8"	1-⅜"	K	H.C.WD.		WD	F5	11/A8.04		4/A8.05		39	–	
121E	3'-0"	6'-8"	1-¾"	K	H.C.WD.		WD	F5	11/A8.04		4/A8.05		39	–	
122	PR. 3'-0"	6'-8"	1-¾"	I	HM		HM	F6	11/A8.04		7/A8.05		18F	60 MIN.	PANIC HARDWARE
122A	PR. 3'-0"	7'-0"	1-¾"	C	A/G		ALU	F4	2/A8.04		7A/A8.05			–	PANIC HARDWARE
123	3'-0"	6'-8"	1-¾"	M	H.C.WD.		WD	F5	11/A8.04		7/A8.05			–	
124	3'-0"	6'-8"	1-¾"	I	HM		HM	F5	11/A8.04		11A/A8.05			60 MIN.	
126E	PR. 3'-0"	7'-0"	1-¾"	A	A/G		ALU	F4	3/A8.04		1/A8.04		05	–	PANIC HARDWARE
126W	PR. 3'-0"	7'-0"	1-¾"	A	A/G		ALU	F4	3/A8.04		1/A8.04		05A	–	PANIC HARDWARE
127	3'-0"	6'-8"	1-¾"	I	HM		HM	F5	11/A8.04		7/A8.05		38	20 MIN.	NO SELFCLOSER
130	3'-0"	6'-8"	1-¾"	M	H.C.WD.		WD	F5	11/A8.04		7/A8.05		37	–	
130A	3'-0"	7'-0"	1-¾"	D	A/G		ALU	F8	3/A8.04		7A/A8.05				
131A	PR. 3'-0"	6'-8"	¾"	N	HM		HM	F5	–		–			–	
133	PR. 3'-0"	6'-8"	1-¾"	J	ALU		ALU	F6	11/A8.04		7/A8.05		32	20 MIN.	PANIC HARDWARE
133A	3'-0"	6'-8"	1-¾"	M	H.C.WD.		WD	F5	11/A8.04		7/A8.05		38	–	
133B	3'-0"	6'-8"	1-¾"	M	H.C.WD.		WD	F5	11/A8.04		7/A8.05		38	–	
133C	3'-0"	6'-8"	1-¾"	M	H.C.WD.		WD	F5	11/A8.04		7/A8.05		38	–	
134	3'-0"	6'-8"	1-¾"	H	ALU		HM	F9	11/A8.04		7/A8.05		27	20 MIN.	
134A	3'-0"	8'-0"	1-¾"	D	A/G		HM	F1	2/A8.04		7A/A8.05		05	–	PANIC HARDWARE
135	PR. 3'-0"	7'-0"	1-⅜"	C	A/G		HM	F2	2/A8.04		7A/A8.05		05	–	PANIC HARDWARE
135A	PR. 3'-0"	6'-8"	1-⅜"	J	ALU		HM	F6	11/A8.04		7/A8.05		30	–	
135B	PR. 3'-0"	6'-8"	1-¾"	J	A/G		HM	F6	11/A8.04		7/A8.05		30	–	
135C	PR. 3'-0"	7'-0"	1-¾"	C	A/G		HM	F4	4/A8.04		7A/A8.05		05	–	PANIC HARDWARE
135D	3'-0"	6'-8"	1-¾"	I	HM		HM	F5	10/A8.04		7/A8.05		31	NON-RATED	PANIC HARDWARE
135E	3'-0"	6'-8"	1-¾"	H	ALU		HM	F5	11/A8.04		7/A8.05		26	20 MIN.	PANIC HARDWARE
135F	3'-0"	6'-8"	1-¾"	H	ALU		HM	F5	11/A8.04		7/A8.05		26	20 MIN.	PANIC HARDWARE
~~135G~~	~~PR. 3'-0"~~	~~6'-8"~~	~~1-¾"~~	~~J~~	~~ALU~~		~~HM~~	~~F6~~	~~11/A8.04~~		~~7/A8.05~~				
136	PR. 4'-0"	8'-0"	1-¾"	B1	HM		HM	F3	5/A8.04		5/A8.05		02		
~~137~~	~~3'-0"~~	~~6'-8"~~	~~1-¾"~~	~~I~~	~~HM~~		~~HM~~	~~F5~~	~~11/A8.04~~		~~7A/A8.05~~		~~29~~	~~90 MIN.~~	
137A	3'-0"	7'-0"	1-¾"	B	HM		HM	F8	5/A8.04		7/A8.05		41	–	PANIC HARDWARE
137B	3'-0"	6'-8"	1-¾"	I	HM		HM	F5	11/A8.04		11/A8.05		29	–	
138	PR. 3'-0"	6'-8"	1-⅜"	G	HM		HM	F6	12/A8.04		11/A8.05		24	20 MIN.	PANIC HARDWARE
138A	4'-0"	7'-0"	1-⅜"	B1	HM		HM	F3	5/A8.04		7A/A8.05		41	–	PANIC HARDWARE
139	3'-0"	6'-8"	1-⅜"	I	HM		HM	F5	12/A8.04		11/A8.05		25	–	
140	3'-0"	6'-8"	1-¾"	H	ALU		ALU	F5	11/A8.04		7/A8.05		26	20 MIN.	PANIC HARDWARE
140A	3'-0"	6'-8"	1-¾"	H	ALU		ALU	F5	11/A8.04		7/A8.05		26	–	
141	3'-0"	6'-8"	1-¾"	K	ALU		ALU	F9	11/A8.04		7/A8.05			–	
142	PR. 3'-0"	6'-8"	1-¾"	J	ALU		HM	F6	11/A8.04		7/A8.05		42	20 MIN.	PANIC HARDWARE
143	3'-0"	6'-8"	1-¾"	I	HM		HM	F5	11/A8.04		10A/A8.05		36	20 MIN.	
144	3'-0"	6'-8"	1-¾"	I	HM		HM	F5	11/A8.04		10A/A8.05		36	20 MIN.	
145	3'-0"	6'-8"	1-¾"	I	HM		HM	F5	11/A8.04		11A/A8.05		18F	20 MIN.	
146	3'-0"	6'-8"	1-¾"	H	ALU		ALU	F5	11/A8.04		7/A8.05		35	20 MIN.	PANIC HARDWARE
147	PR. 3'-0"	6'-8"	1-¾"	J	ALU		ALU	F6	11/A8.04		7/A8.05		33	20 MIN.	PANIC HARDWARE
147A	3'-0"	6'-8"	1-¾"	H	ALU		ALU	F5	11/A8.04		7/A8.05		26	20 MIN.	PANIC HARDWARE
152	3'-0"	6'-8"	1-¾"	I	HM		HM	F5	11/A8.04		11A/A8.05		37	60 MIN.	
154	3'-0"	6'-8"	1-¾"	I	HM		HM	F5	11/A8.04		7/A8.05		18F	60 MIN.	
155	3'-0"	7'-0"	1-¾"	B	HM		HM	F8	4/A8.04		1/A8.04		07	45 MIN.	
156	PR. 4'-0"	8'-0"	1-¾"	B1	HM		HM	F3	7/A8.04		5/A8.04				
157	PR. 3'-6"	8'-0"	1-¾"	B1	HM		HM	F3	7/A8.04		5/A8.04			60 MIN.	PANIC HARDWARE
158	PR. 3'-6"	8'-0"	1-¾"	B1	HM		HM	F3	7/A8.04		5/A8.04			60 MIN.	PANIC HARDWARE
C-160S	3'-0"	7'-0"	1-¾"	D	A/G		ALU	18/A8.03	4/A8.04		1/A8.04			–	PANIC HARDWARE
C-170E	3'-0"	7'-0"	1-¾"	D	A/G		ALU	18/A8.03	4/A8.04		1/A8.04		07	–	PANIC HARDWARE
C-170W	3'-0"	7'-0"	1-¾"	D	A/G		ALU	18/A8.03	4/A8.04		1/A8.04		07	–	PANIC HARDWARE
C-180E	PR. 3'-0"	7'-0"	1-¾"	A	A/G		ALU	F4	3/A8.04				05	–	PANIC HARDWARE
C-180W	PR. 3'-0"	7'-0"	1-¾"	A	A/G		ALU	F4	3/A8.04		1/A8.04		05	–	PANIC HARDWARE
C-190E	3'-0"	7'-0"	1-¾"	D	A/G		ALU	18/A8.03	4/A8.04		1/A8.04		07	–	PANIC HARDWARE
C-190W	3'-0"	7'-0"	1-¾"	D	A/G		ALU	18/A8.03	4/A8.04		1/A8.04		07	–	PANIC HARDWARE
SECOND FLOOR															
236	3'-0"	6'-8"	1-¾"	I	HM		HM	F5	11/A8.04		11A/A8.04		37	–	
237	3'-0"	6'-8"	1-¾"	I	HM		HM	F5	11/A8.04		11A/A8.04		37	–	
240	PR. 3'-0"	8'-0"	1-¾"	E	VNL		VNL	F2	16/A8.04		13/A8.04		44	–	
241	3'-0"	6'-8"	1-¾"	I	HM		HM	F5	11/A8.04		11A/A8.05		18F	60 MIN.	
242	PR. 3'-0"	6'-8"	1-¾"	G	HM		HM	F6	11/A8.04		11A/A8.04		42	–	
243	PR. 3'-0"	8'-0"	1-¾"	E	VNL		VNL	F2	16/A8.04		13/A8.04		44	–	
244	3'-0"	6'-8"	1-¾"	I	HM		HM	F5						90 MIN.	
251	3'-0"	6'-8"	1-¾"	I	HM		HM	F5	11/A8.04		11A/A8.04		37	60 MIN.	
252	3'-0"	6'-8"	1-¾"	I	HM		HM	F5	11/A8.04		11A/A8.05		37	60 MIN.	
254	3'-0"	6'-8"	1-¾"	I	HM		HM	F5	11/A8.04		11A/A8.05		18F	60 MIN.	
255	PR. 3'-0"	6'-8"	1-¾"	B1	HM		HM	F3	7/A8.04		5/A8.04			20 MIN.	
256	PR. 3'-0"	6'-8"	1-¾"	B1	HM		HM	F3	7/A8.04		5/A8.04			20 MIN.	
257	PR. 3'-0"	6'-8"	1-¾"	B1	HM		HM	F3	7/A8.04		5/A8.04			60 MIN.	
THIRD FLOOR															
336	3'-0"	6'-8"	1-¾"	I	HM		HM	F5	11/A8.04		11A/A8.04		37	–	
337	3'-0"	6'-8"	1-¾"	I	HM		HM	F5	11/A8.04		11A/A8.04		37	–	
340	PR. 3'-0"	8'-0"	1-¾"	E	VNL		VNL	F2	16/A8.04		13/A8.04		44	–	
342	PR. 3'-0"	6'-8"	1-⅜"	G	HM		HM	F6	11/A8.04		11A/A8.04		42	–	
343	PR. 3'-0"	8'-0"	1-¾"	E	VNL		VNL	F2	16/A8.04		13/A8.04		44	–	
344	3'-0"	6'-8"	1-¾"	I	HM		HM	F5	11/A8.04		11A/A8.05			60 MIN.	
351	3'-0"	6'-8"	1-¾"	I	HM		HM	F5	11/A8.04		11A/A8.04		37	60 MIN.	
352	3'-0"	6'-8"	1-¾"	I	HM		HM	F5	11/A8.04		11A/A8.05		37	60 MIN.	
354	3'-0"	6'-8"	1-¾"	I	HM		HM	F5	11/A8.04		11A/A8.05		18F	60 MIN.	
355	PR. 3'-0"	6'-8"	1-¾"	B1	HM		HM	F3	7/A8.04		5/A8.04			60 MIN.	
356	PR. 3'-0"	6'-8"	1-¾"	B1	HM		HM	F3	7/A8.04		5/A8.04			60 MIN.	
357	PR. 3'-0"	6'-8"	1-¾"	B1	HM		HM	F3	7/A8.04		5/A8.04			60 MIN.	
FOURTH FLOOR															
436	3'-0"	6'-8"	1-¾"	I	HM		HM	F5	11/A8.04		11A/A8.04		37	–	
437	3'-0"	6'-8"	1-¾"	I	HM		HM	F5	11/A8.04		11A/A8.04		37	–	
440	PR. 3'-0"	8'-0"	1-¾"	E	VNL		VNL	F2	16/A8.04		13/A8.04		44	–	
442	PR. 3'-0"	6'-8"	1-⅜"	G	HM		HM	F6	11/A8.04		11A/A8.04		42	–	
443	PR. 3'-0"	8'-0"	1-¾"	E	VNL		VNL	F2	16/A8.04		13/A8.04		44	–	
444	3'-0"	6'-8"	1-¾"	I	HM		HM	F5	11/A8.04		11A/A8.05			60 MIN.	
451	3'-0"	6'-8"	1-¾"	I	HM		HM	F5	11/A8.04		11A/A8.04		37	60 MIN.	
452	3'-0"	6'-8"	1-¾"	I	HM		HM	F5	11/A8.04		11A/A8.05		37	60 MIN.	
454	3'-0"	6'-8"	1-¾"	I	HM		HM	F5	11/A8.04		11A/A8.05		18F	60 MIN.	
455	PR. 3'-0"	6'-8"	1-¾"	B1	HM		HM	F3	7/A8.04		5/A8.04			60 MIN.	
456	PR. 3'-0"	6'-8"	1-¾"	B1	HM		HM	F3	7/A8.04		5/A8.04			60 MIN.	
457	PR. 3'-0"	6'-8"	1-¾"	B1	HM		HM	F3	7/A8.04		5/A8.04			60 MIN.	

1 GLAZING TYPES

1/4" TEMPERED GLASS, AT ALL DOORS, UNLESS NOTED OTHERWISE. TYP. UNIT FLOOR DOOR TYPES SEE SHEETS A7.1 AND A7.2

DOOR SCHEDULE — Scale X" = 1'-0" — 5

NOTES:
1. UNIT DOOR TYPE 'W' POCKET DOOR TO BE MIN. 32" CLEAR WHEN DOOR IS FULLY OPEN.

KEY NOTES — Scale X" = 1'-0" — 1

WWC OT
Widom Wein Cohen O'Leary Terasawa
3130 Wilshire Boulevard
Sixth Floor
Santa Monica, California 90403
T (310) 828-0040
F (310) 453-9432
www.wwcot.com
Inland Empire
Palm Springs
Moorpark
Shanghai, China

RECEIVED
10:08 am, Aug 14, 2008
FRAMEMAX

Building Department
Submittal: June 1, 2007
Issued For Bid: _____
Issued For Construction: January 29, 2008

2 07-10-2008 PLAN/ELEVATION COORDINATION REVISIONS

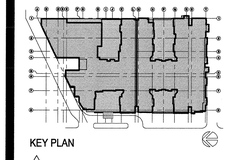

KEY PLAN

RECEIVED
AUG 04 2008
SUFFOLK CONSTRUCTION

Project:
Jewish Home for The Aging
FOUNTAINVIEW AT EISENBERG VILLAGE
6440 Wilbur Ave
Reseda, CA. 91335

JEWISH HOME
JEWISH HOME FOR THE AGING
18855 Victory Blvd.
Reseda, CA 91335
Project Number: 04206.00

Door Types, Frame Types & Door Schedule

Date: 01/21/2008
Drawn By:
Checked By:

A8.01
Sheet No.

File Path & Name: F:\PROJECTS\04206-00\A-CD\SHEETS\A8.01.DWG
© WWCOT 2006 Jul 28, 2008 - 01:34 pm

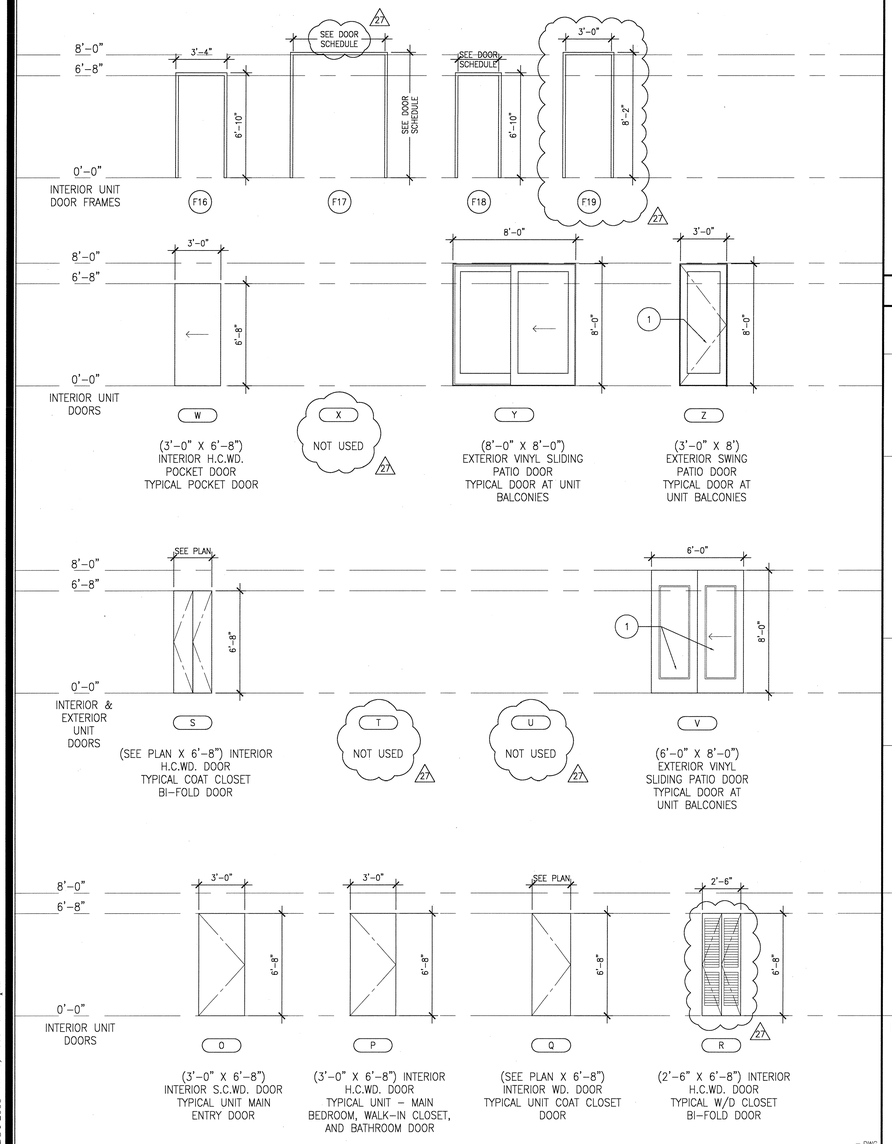

UNIT DOOR & FRAME TYPES — Scale 1/4" = 1'-0" — 4

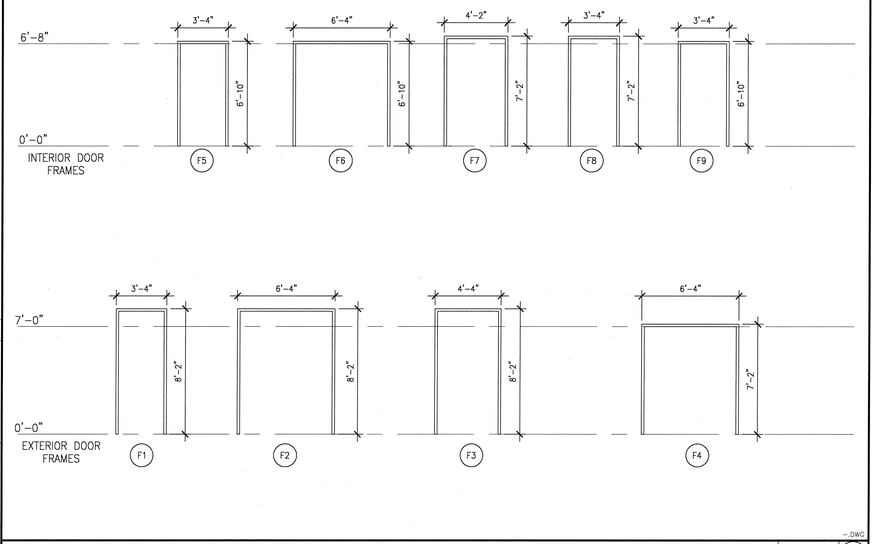

FRAME TYPES — Scale X" = 1'-0" — 3

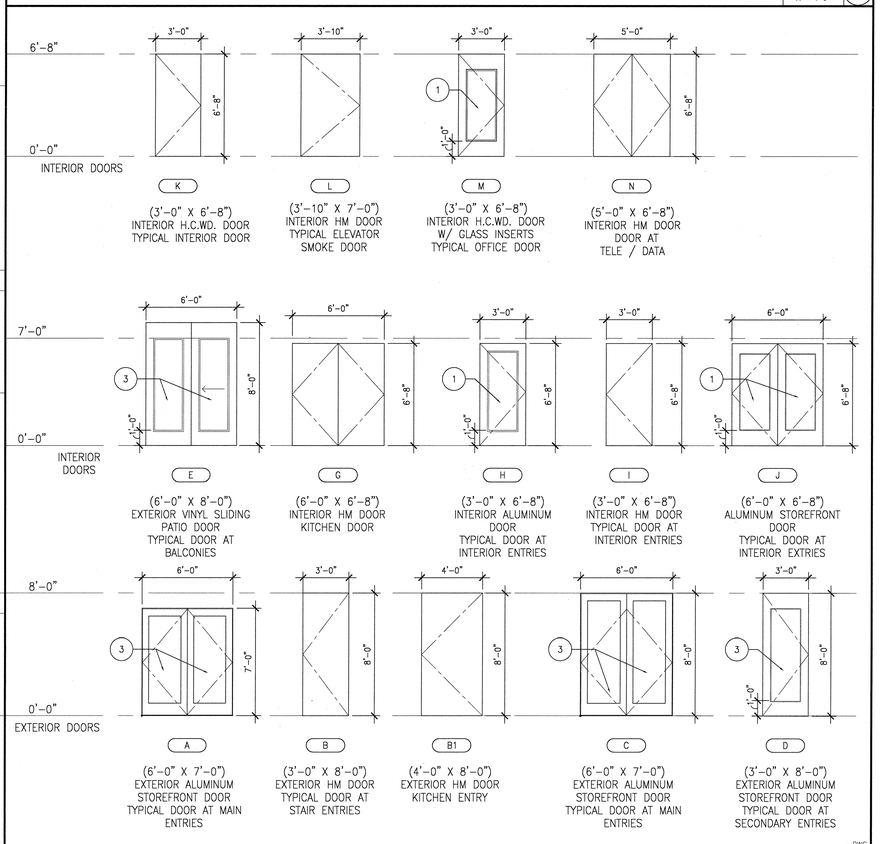

DOOR TYPES — Scale 1/4" = 1'-0" — 2

GLAZING TYPES

1. IGU 3/4" INSULATED GLAZING UNIT, LOW-E
2. ITG 3/4" INSULATED TEMPERED GLAZING UNIT, LOW-E
3. ITG 1" INSULATED TEMPERED GLAZING UNIT, LOW-E

WWC OT
Widom Wein Cohen O'Leary Terasawa
3130 Wilshire Boulevard
Sixth Floor
Santa Monica, California 90403
T (310) 828-0040
F (310) 453-9432
www.wwcot.com
Inland Empire
Palm Springs
Moorpark
Shanghai, China

RECEIVED
10:08 am, Aug 14, 2008
FRAMEMAX

Building Department Submittal: June 1, 2007
Issued For Bid:
Issued For Construction: January 29, 2008

27 07-10-2008 PLAN/ELEVATION COORDINATION REVISIONS

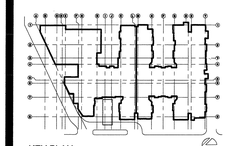

KEY PLAN

RECEIVED
AUG 04 2008
SUFFOLK CONSTRUCTION

Project:
Jewish Home for The Aging
FOUNTAINVIEW AT EISENBERG VILLAGE
6440 Wilbur Ave
Reseda, CA. 91335

JEWISH HOME FOR THE AGING
18855 Victory Blvd.
Reseda, CA 91335
Project Number: 04206.00

Unit Frame Types, Door Types

Date: 01/21/2008
Drawn By:
Checked By:

A8.02
Sheet No.

File Path & Name: F:\PROJECTS\04206-00\A-CD\SHEETS\A8.02.DWG
© WWCOT 2006 Jul 28, 2008 - 01:54 pm

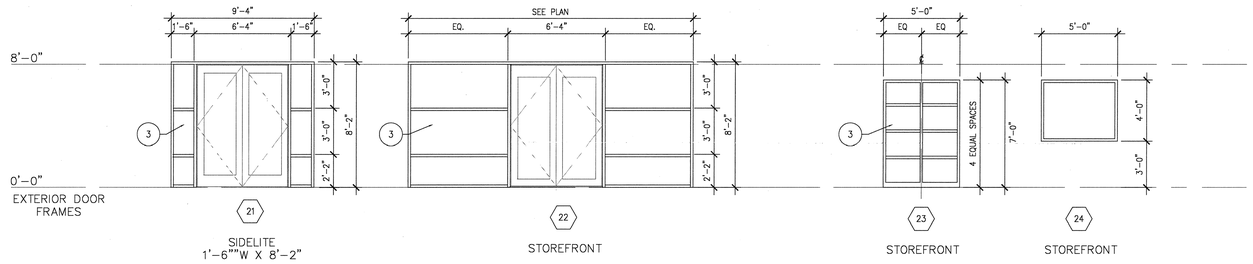

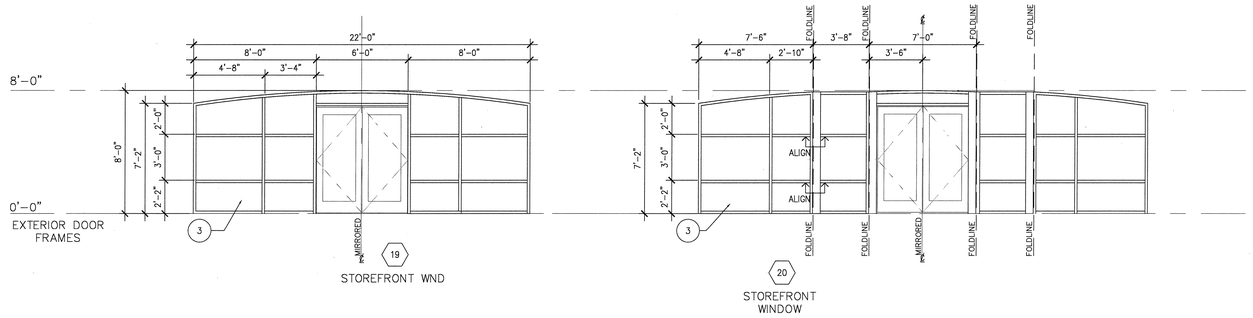

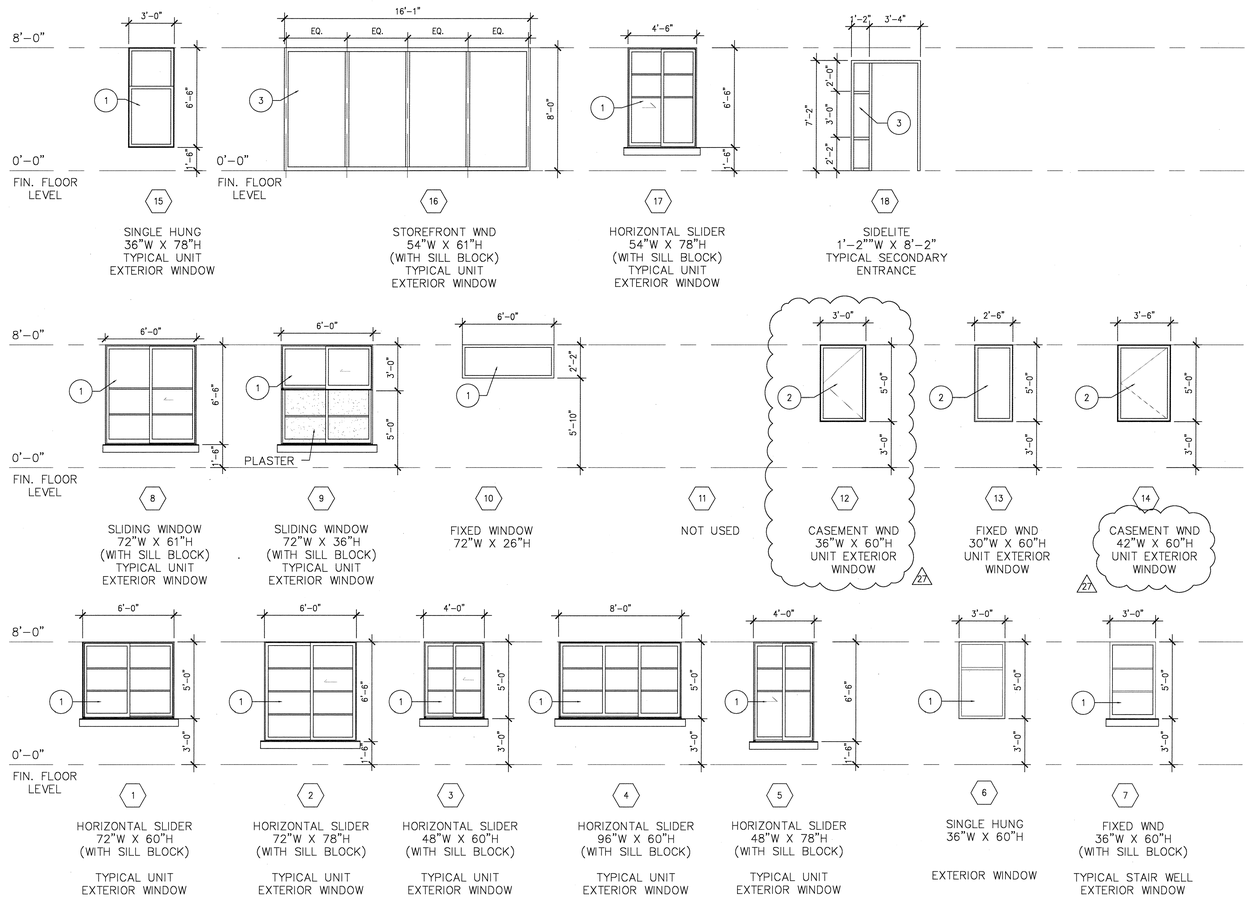

WINDOW TYPES

Scale 3/32" = 1'-0" | 9 | ...DWG

WINDOW SCHEDULE

NO	WINDOW DIMENSION WIDTH	HEIGHT	THICK	TYPE	RATING	FRAME MATERIAL	FINISH	DETAILS SHEET A6.06 & A6.07 U.N.O. HEAD	JAMB	SILL	OTHER	REMARKS
1	6'-0"	5'-0"	4-1/2"	1		VNL		3/A8.6.2	3/A8.6.2			
2	6'-0"	6'-5"	4-1/2"	2		VNL		3/A8.6.2	3/A8.6.2			
3	4'-0"	5'-0"	4-1/2"	3		VNL		3/A8.6.2	3/A8.6.2			
4	8'-0"	5'-0"	4-1/2"	4		VNL		4/A8.6.2	4/A8.6.2			
5	4'-0"	6'-6"	4-1/2"	5		VNL		3/A8.6.2	3/A8.6.2			
6	3'-0"	5'-0"	4-1/2"	6		VNL		3/A8.6.2	3/A8.6.2			
7	3'-0"	5'-0"	4-1/2"	7		VNL		3/A8.6.2	3/A8.6.2			
8	6'-0"	6'-6"	4-1/2"	8		VNL		4/A8.6.2	4/A8.6.2			
9	6'-0"	3'-0"	4-1/2"	9		VNL		3/A8.6.2	3/A8.6.2			
10	6'-0"	2'-2"	4-1/2"	10		VNL		3/A8.6.2	3/A8.6.2			
11	3'-0"	5'-8"~6'-6"	4-1/2"	11		VNL		3/A8.6.2	3/A8.6.2			
12	3'-6"	5'-6"~6'-6"	4-1/2"	12		VNL		4/A8.6.2	4/A8.6.2			
13	2'-6"	5'-0"	4-1/2"	13		VNL		3/A8.6.2	3/A8.6.2			27
14	3'-6"	5'-0"	4-1/2"	14		VNL		3/A8.6.2	3/A8.6.2			
15	3'-0"	6'-6"	4-1/2"	15		VNL		3/A8.6.2	3/A8.6.2			
16	6'-1"	8'-0"	4-1/2"	16		VNL		3/A8.6.2	3/A8.6.2			
17	4'-6"	6'-6"	4-1/2"	17		VNL		4/A8.6.2	4/A8.6.2			
18	1'-2"	8'-2"	4-1/2"	18		ALU		3/A8.6.2	3/A8.6.2			SIDELITE
19	22'-0"	7'-2"~8'-0"	4-1/2"	19		ALU		3/A8.6.2	3/A8.6.2			STOREFRONT
20	SEE WINDOW TYPE		4-1/2"	20		ALU		3/A8.6.2	3/A8.6.2			STOREFRONT
21	1'-6"	8'-2"	4-1/2"	21		ALU		3/A8.6.2	3/A8.6.2			SIDELITE
22	SEE PLAN	8'-2"	4-1/2"	22		ALU		3/A8.6.2	3/A8.6.2			STOREFRONT
23	5'-0"	7'-0"	4-1/2"	23	45MIN.	ALU		15/A8.6.1	15/A8.6.1			STOREFRONT(142.5X0.25=35)
24	5'-0"	4'-0"	4-1/2"	24	45MIN.	ALU		13/A8.6.1	13/A8.6.1			STOREFRONT(87X0.25=21)
25	7'-0"	4'-0"	4-1/2"	24	45MIN.	ALU		14/A8.6.1	14/A8.6.1			STOREFRONT(87X0.25=21)

NOTE: ALL WINDOW HEAD HIGHEST 8'-0" A.F.F. UNLESS OTHERWISE NOTED.

GLAZING TYPES

1. IGU 3/4" INSULATED GLAZING UNIT, LOW-E
2. ITG 3/4" INSULATED TEMPERED GLAZING UNIT, LOW-E
3. ITG 1" INSULATED TEMPERED GLAZING UNIT, LOW-E

WINDOW SCHEDULE

Scale X" = 1'-0" | 3 | ...DWG

NOT USED

Scale | 1 | ...DWG

WWCOT
Widom Wein Cohen O'Leary Terasawa
3130 Wilshire Boulevard
Sixth Floor
Santa Monica, California 90403
T (310) 828-0040
F (310) 453-9432
www.wwcot.com
Inland Empire
Palm Springs
Moorpark
Shanghai, China

RECEIVED
10:08 am, Aug 14, 2008
FRAMEMAX

Building Department Submittal: June 1, 2007
Issued For Bid:
Issued For Construction: January 29, 2008

27 07-10-2008 PLAN/ELEVATION COORDINATION REVISIONS

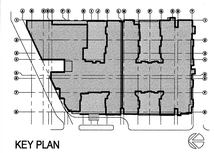

KEY PLAN

RECEIVED
AUG 04 2008
SUFFOLK CONSTRUCTION

Project:
Jewish Home for The Aging
FOUNTAINVIEW AT EISENBERG VILLAGE
6440 Wilbur Ave
Reseda, CA. 91335

JEWISH HOME FOR THE AGING
18855 Victory Blvd.
Reseda, CA 91335
Project Number: 04206.00

Window Types and Schedule

Date: 01/21/2008
Drawn By:
Checked By:

A8.03
Sheet No.

File Path & Name: F:\PROJECTS\04206.00\A-CD\SHEETS\A8.03.DWG
© WWCOT 2006 Jul 28, 2008 - 01:34 pm

NOT USED — Scale 3"=1'-0" — 20

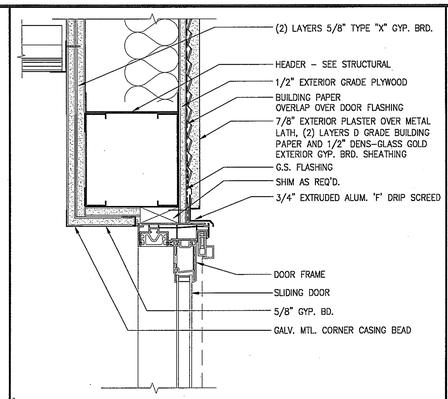

Sliding Door Head - STUCCO — Scale 3"=1'-0" — 16

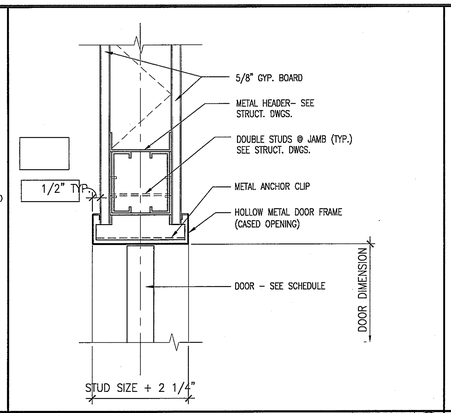

INTERIOR HEAD/JAMB (PUSH & PULL) — Scale 3"-1'-0" — 12

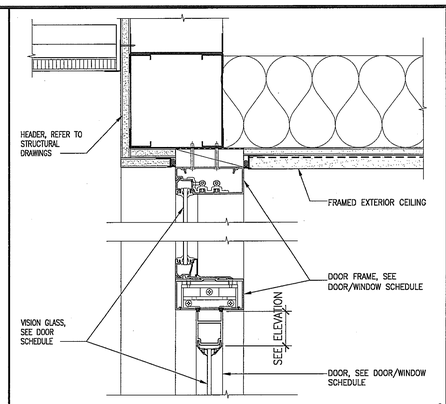

Exterior Door Head /Jamb (Typical) — Scale 3" = 1'-0" — 8

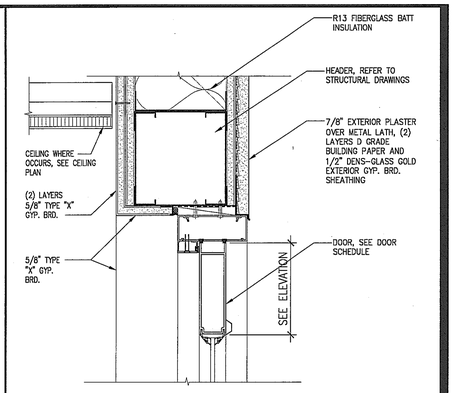

DOOR HEAD AND JAMB DETAIL - STUCCO — Scale 3"=1'-0" — 4

NOT USED — Scale 3"=1'-0" — 19

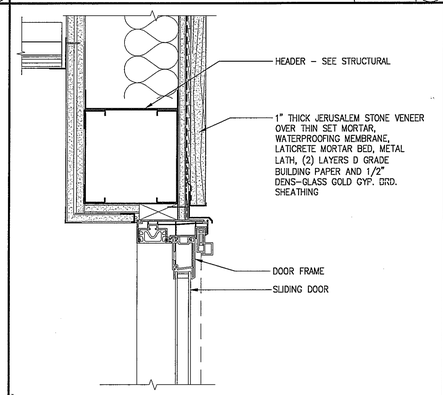

Sliding Door Head - STONE — Scale 3"=1'-0" — 15

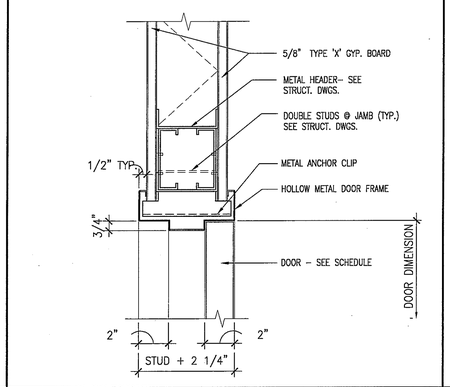

INTERIOR DOOR HEAD/JAMB (TYPICAL) — Scale 3"=1'-0" — 11

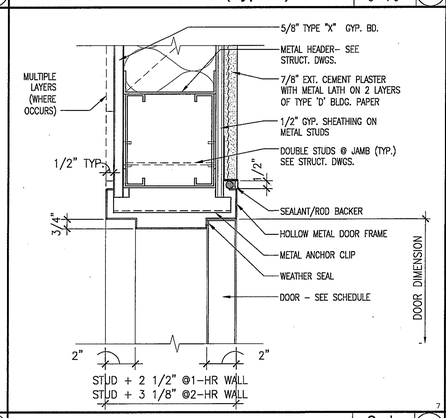

Exterior Door Head /Jamb (Typical) — Scale 3" = 1'-0" — 7

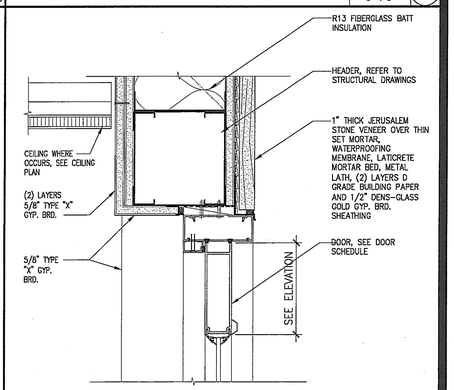

DOOR HEAD & JAMB DETAIL - STONE — Scale 1 1/2"=1'-0" — 3

NOT USED — Scale 3"=1'-0" — 19

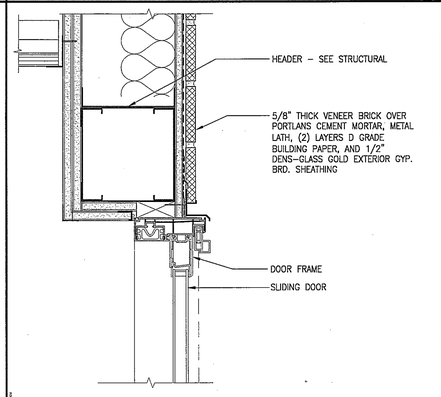

Sliding Door Head - BRICK — Scale 3"=1'-0" — 14

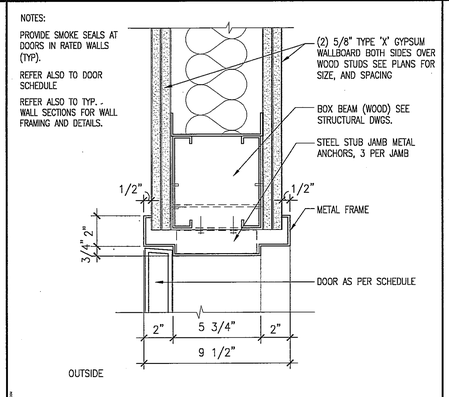

2HR. RATED HEAD/JAMB (INTERIOR) — Scale 3"=1'-0" — 10

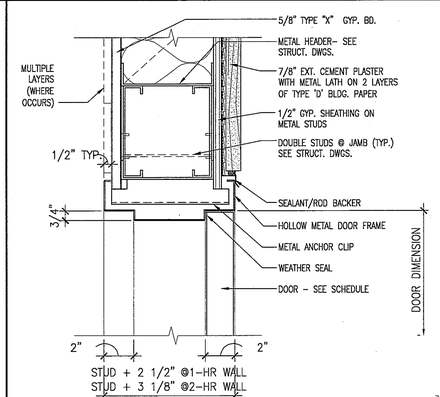

Exterior Door Head /Jamb (STONE) — Scale 3" = 1'-0" — 6

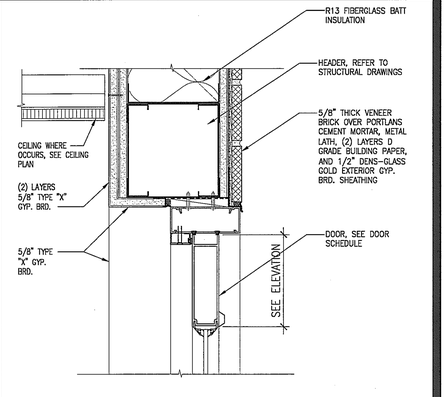

DOOR HEAD & JAMB DETAIL - BRICK — Scale 3"=1'-0" — 2

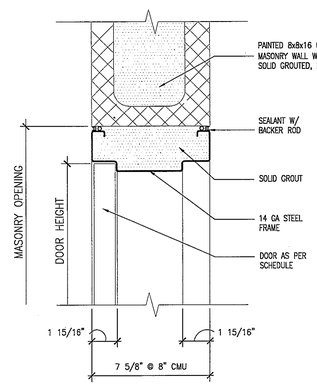

Door Head at 8" CMU Wall — Scale 3"=1'-0" — 18

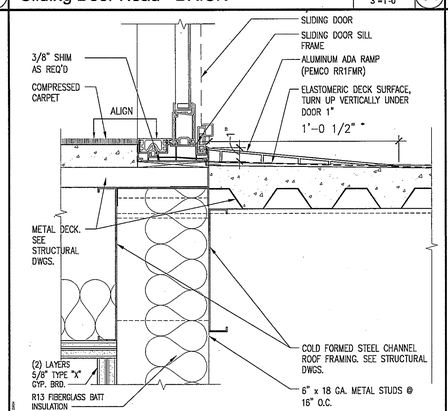

Sliding Door Sill — Scale 3"=1'-0" — 13

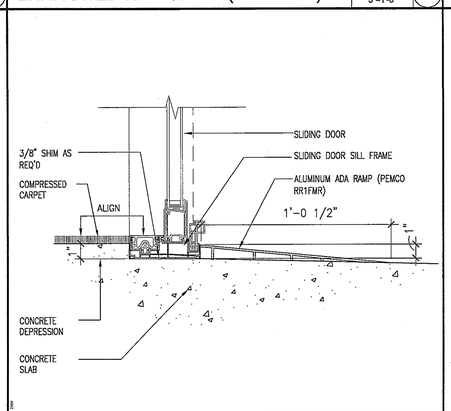

Sliding Door Sill at Concrete Slab — Scale 3"=1'-0" — 9

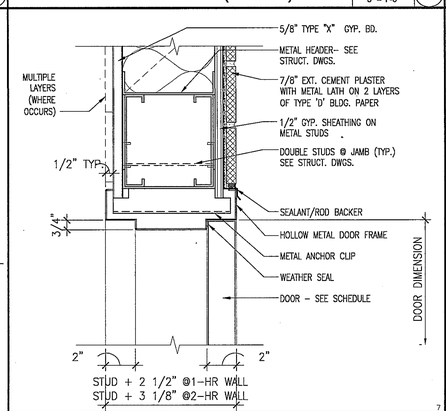

Exterior Door Head /Jamb (BRICK) — Scale 3" = 1'-0" — 5

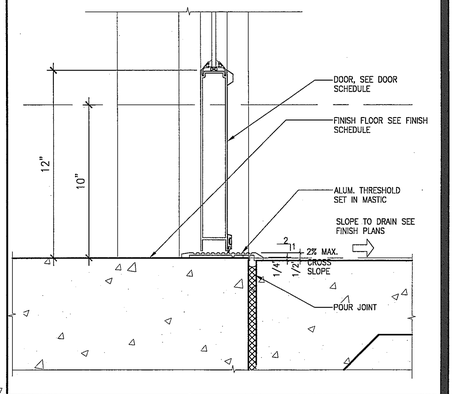

DOOR SILL DETAIL — Scale 3"-1'-0" — 1

WWC OT
Widom Wein Cohen O'Leary Terasawa

3130 Wilshire Boulevard
Sixth Floor
Santa Monica, California 90403
T (310) 828-0040
F (310) 453-9432
www.wwcot.com

Inland Empire
Palm Springs
Moorpark
Shanghai, China

RECEIVED
10:08 am, Aug 14, 2008
FRAMEMAX

Building Department Submittal: June 1, 2007
Issued For Bid:
Issued For Construction:

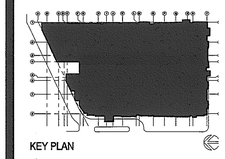

KEY PLAN

Project:
Jewish Home for The Aging
FOUNTAINVIEW AT EISENBERG VILLAGE
6440 Wilbur Ave
Reseda, CA. 91335

JEWISH HOME
JEWISH HOME FOR THE AGING
18855 Victory Blvd.
Reseda, CA 91335
Project Number: 04206.00

Exterior Wall Door Details

Date: 04/05/2007
Drawn By:
Checked By:

A8.04
Sheet No.

File Path & Name: F:\PROJECTS\04206-00\A-CD\SHEETS\A8.04.DWG
© WWCOT 2006 May 28, 2007 - 03:53 pm

RECEIVED BY SUFFOLK ON 06/01/07

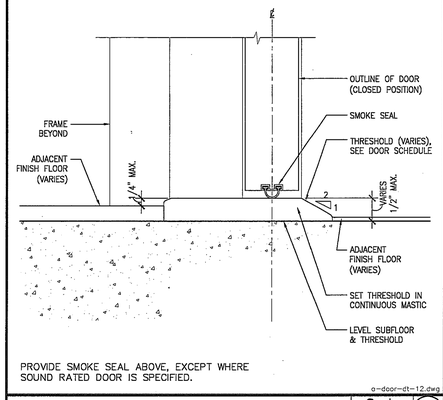

PROVIDE SMOKE SEAL ABOVE, EXCEPT WHERE SOUND RATED DOOR IS SPECIFIED.

a-door-dt-12.dwg

Smoke Seal @ Rated Doors — Scale 6"=1'-0" — 12

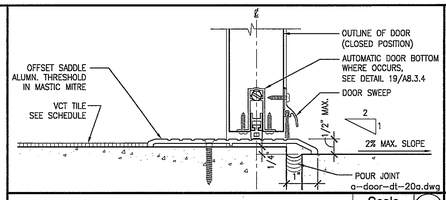

a-door-dt-20a.dwg

VCT to Concrete (Exterior) — Scale 6"=1'-0" — 8A

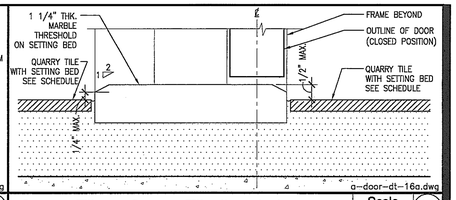

a-door-dt-16a.dwg

Quarry Tile to Quarry Tile (Interior) — Scale 6"=1'-0" — 4A

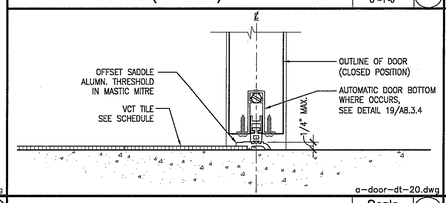

a-door-dt-20.dwg

VCT to Concrete (Interior) — Scale 6"=1'-0" — 8

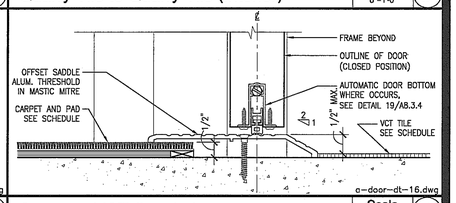

a-door-dt-16.dwg

Carpet to VCT (Interior) — Scale 6"=1'-0" — 4

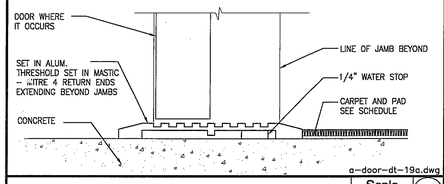

a-door-dt-19a.dwg

Carpet to Concrete (Interior) — Scale 6"=1'-0" — 11A

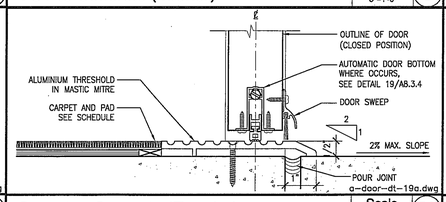

a-door-dt-19a.dwg

Carpet to Concrete (Exterior) — Scale 6"=1'-0" — 7A

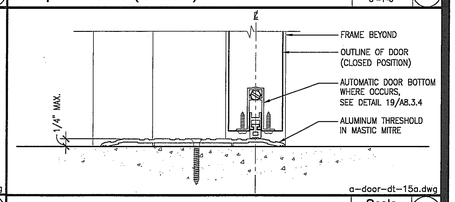

a-door-dt-15a.dwg

Concrete to Concrete (Int.) @ Rated Wall — Scale 6"=1'-0" — 3A

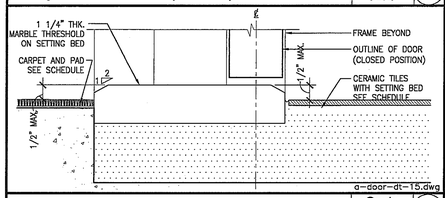

a-door-dt-15.dwg

Carpet to Ceramic Tiles (Interior) — Scale 6"=1'-0" — 11

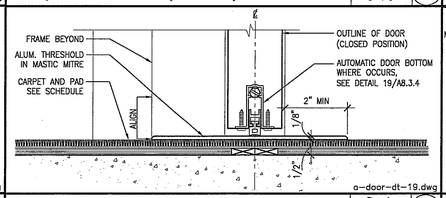

a-door-dt-19.dwg

Carpet to Carpet (Interior) — Scale 6"=1'-0" — 7

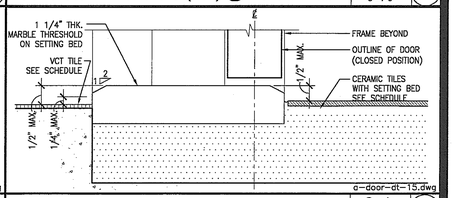

a-door-dt-15.dwg

VCT to Ceramic Tiles (Interior) — Scale 6"=1'-0" — 3

NOT USED — Scale — 10A

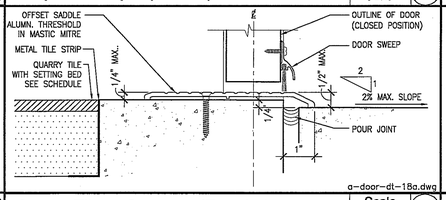

a-door-dt-18a.dwg

Quarry Tile to Concrete (Exterior) — Scale 6"=1'-0" — 6A

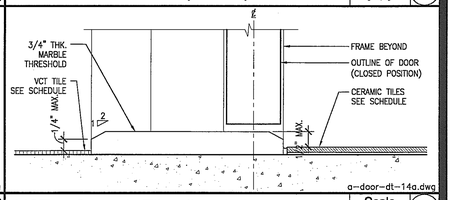

a-door-dt-14a.dwg

VCT to Ceramic Tiles (Interior) — Scale 6"=1'-0" — 2A

NOT USED — Scale — 10

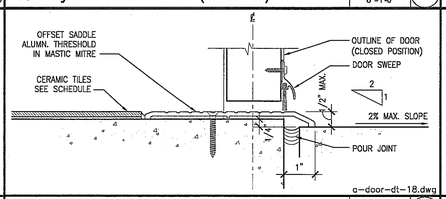

a-door-dt-18.dwg

Ceramic Tiles to Concrete (Exterior) — Scale 6"=1'-0" — 6

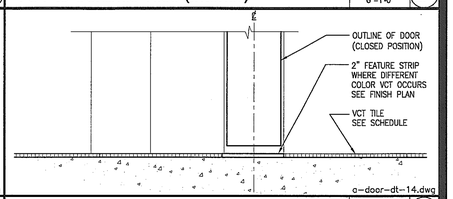

a-door-dt-14.dwg

VCT to VCT (Interior) — Scale 6"=1'-0" — 2

NOT USED — Scale — 9A

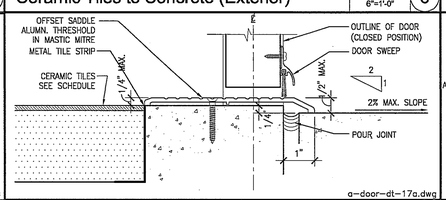

a-door-dt-17a.dwg

Ceramic Tiles to Concrete (Exterior) — Scale 6"=1'-0" — 5A

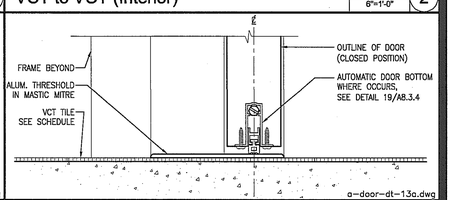

a-door-dt-13a.dwg

VCT to VCT (Interior) — Scale 6"=1'-0" — 1A

NOT USED — Scale — 17

NOT USED — Scale — 13

NOT USED — Scale — 9

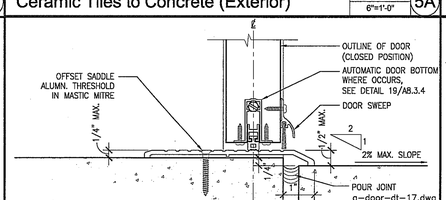

a-door-dt-17.dwg

Concrete To Concrete (Exterior) — Scale 6"=1'-0" — 5

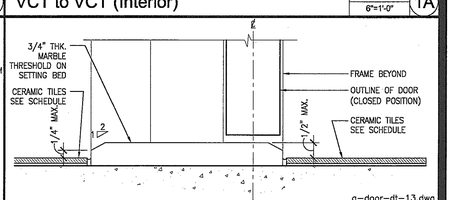

a-door-dt-13.dwg

Ceramic Tile to Ceramic Tile (Interior) — Scale 6"=1'-0" — 1

WWC OT
Widom Wein Cohen O'Leary Terasawa

3130 Wilshire Boulevard
Sixth Floor
Santa Monica, California 90403
T (310) 828-0040
F (310) 453-9432
www.wwcot.com

Inland Empire
Palm Springs
Moorpark
Shanghai, China

RECEIVED
10:08 am, Aug 14, 2008
FRAMEMAX

Building Department Submittal: June 1, 2007
Issued For Bid: _____
Issued For Construction: _____

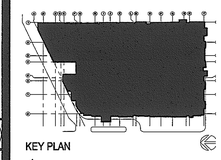

KEY PLAN

1 _____
2 _____
3 _____

Project:
Jewish Home for The Aging
FOUNTAINVIEW AT EISENBERG VILLAGE
6440 Wilbur Ave
Reseda, CA. 91335

JEWISH HOME
JEWISH HOME FOR THE AGING
18855 Victory Blvd.
Reseda, CA 91335

Project Number: 04206.00

Door Details

Date: 04/05/2007
Drawn By: _____
Checked By: _____

A8.05
Sheet No.

File Path & Name: F:\PROJECTS\04206-00\A-CD\SHEETS\A8.05.DWG
© WWCOT 2006 May 28, 2007 - 03:55 pm

RECEIVED BY SUFFOLK ON 06/01/07

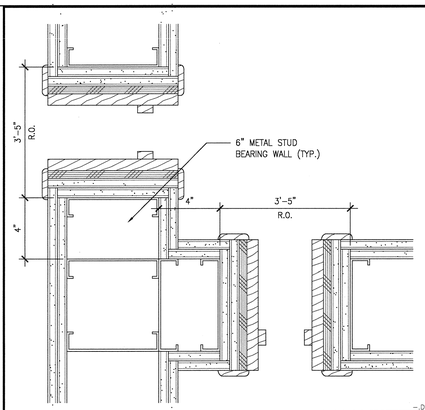

BATHROOM DOOR JAMBS — Scale 3" = 1'-0" — 16

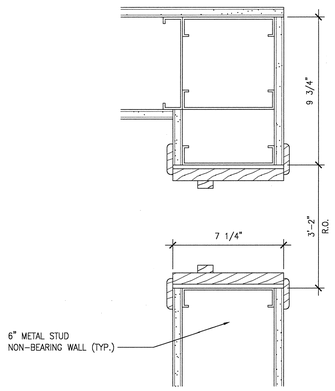

BEDROOM DOOR JAMB — Scale 3" = 1'-0" — 12

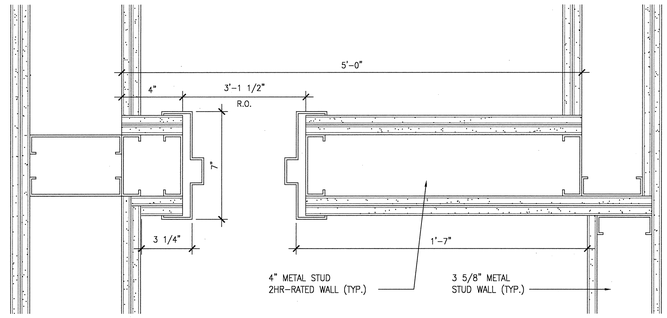

ENTRY DOOR JAMB — Scale 3" = 1'-0" — 4

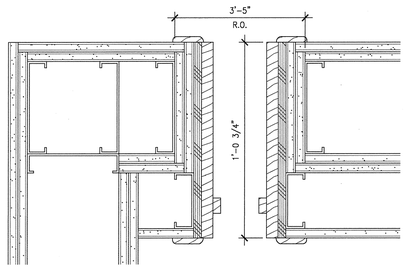

BEDROOM DOOR JAMB — Scale 3" = 1'-0" — 15

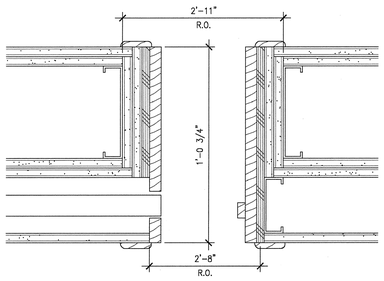

BATH POCKET DOOR JAMB — Scale 3" = 1'-0" — 11

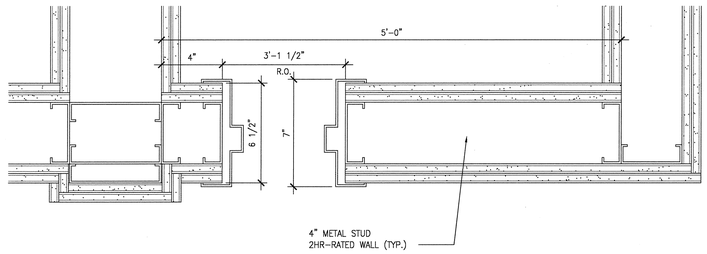

ENTRY DOOR JAMB — Scale X" = 1'-0" — 3

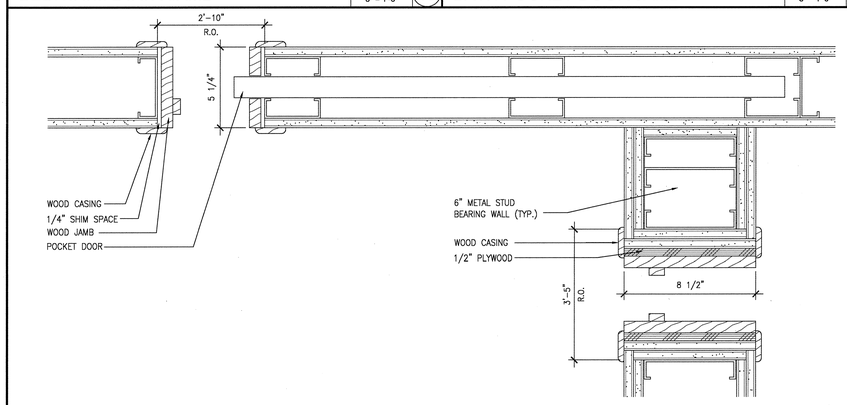

BEDROOM DOOR & BATHROOM POCKET DOOR JAMB — Scale 3" = 1'-0" — 10

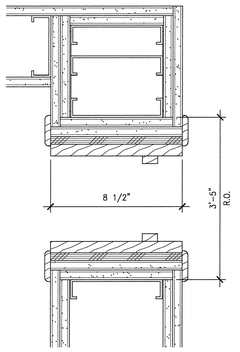

BATH DOOR JAMB — Scale 3" = 1'-0" — 6

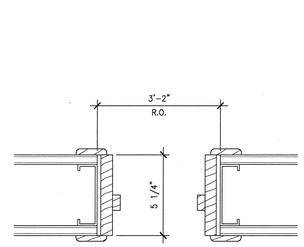

CLOSET DOOR JAMB — Scale 3" = 1'-0" — 2

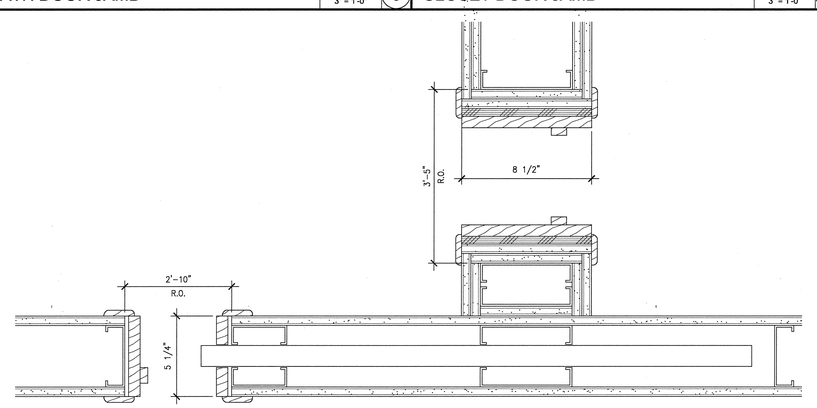

BATH DOOR JAMBS — Scale 3" = 1'-0" — 1

WWC OT
Widom Wein Cohen O'Leary Terasawa

3130 Wilshire Boulevard
Sixth Floor
Santa Monica, California 90403
T (310) 828-0040
F (310) 453-9432
www.wwcot.com

Inland Empire
Palm Springs
Moorpark
Shanghai, China

RECEIVED
10:08 am, Aug 14, 2008
FRAMEMAX

Building Department Submittal: June 1, 2007
Issued For Bid:
Issued For Construction: January 29, 2008

2 7 07-10-2008 PLAN/ELEVATION COORDINATION REVISIONS

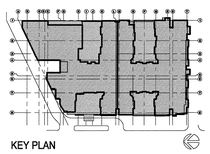

KEY PLAN

RECEIVED
AUG 04 2008
SUFFOLK CONSTRUCTION

Project:
Jewish Home for The Aging

FOUNTAINVIEW AT EISENBERG VILLAGE

6440 Wilbur Ave
Reseda, CA. 91335

JEWISH HOME

JEWISH HOME FOR THE AGING
18855 Victory Blvd.
Reseda, CA 91335

Project Number: 04206.00

DOOR JAMB DETAILS

2 7

Date: 01/21/2008
Drawn By:
Checked By:

A8.06
Sheet No.

File Path & Name: F:\PROJECTS\04206-00\A-CD\SHEETS\A8.06.DWG
© WWCOT 2006 Aug 04, 2008 - 11:54 am

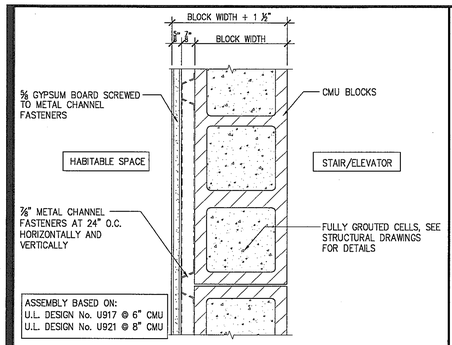

4L4	4" CMU BLOCK, FULLY GROUTED TO UNDERSIDE OF STRUCTURE ABOVE	3K8	8" CMU BLOCK, FULLY GROUTED TO UNDERSIDE OF STRUCTURE ABOVE
3K6	6" CMU BLOCK, FULLY GROUTED TO UNDERSIDE OF STRUCTURE ABOVE	3K10	NOT USED

WALL TYPE 'L' - INTERIOR 3-HR WALL

Scale 3" = 1'-0" 20

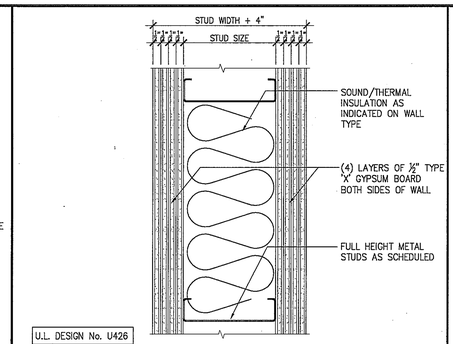

3K4	4" METAL STUDS @ 24" O.C. TO UNDERSIDE OF STRUCTURE ABOVE	3K8	8" METAL STUDS @ 24" O.C. TO UNDERSIDE OF STRUCTURE ABOVE
3K6	6" METAL STUDS @ 24" O.C. TO UNDERSIDE OF STRUCTURE ABOVE	3K10	10" METAL STUDS @ 24" O.C. TO UNDERSIDE OF STRUCTURE ABOVE

WALL TYPE 'K' - INTERIOR 3-HR WALL

Scale 3" = 1'-0" 16

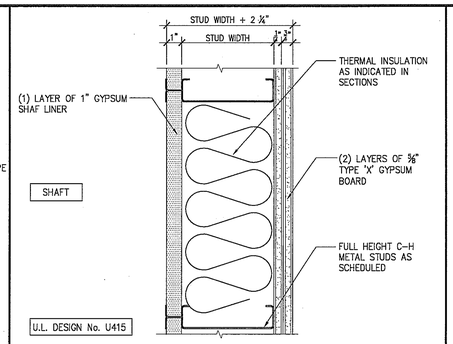

2F4	4" METAL STUDS @ 24" O.C. TO UNDERSIDE OF STRUCTURE ABOVE	2F8	8" METAL STUDS @ 24" O.C. TO UNDERSIDE OF STRUCTURE ABOVE
2F6	6" METAL STUDS @ 24" O.C. TO UNDERSIDE OF STRUCTURE ABOVE	2F10	10" METAL STUDS @ 24" O.C. TO UNDERSIDE OF STRUCTURE ABOVE

WALL TYPE 'F' - INT. 2-HR SHAFT WALL

Scale 3" = 1'-0" 12

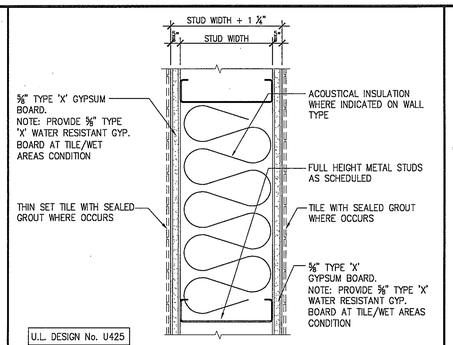

1B4	4" METAL STUDS @ 24" O.C. TO UNDERSIDE OF STRUCTURE ABOVE	1B8	8" METAL STUDS @ 24" O.C. TO UNDERSIDE OF STRUCTURE ABOVE
1B6	6" METAL STUDS @ 24" O.C. TO UNDERSIDE OF STRUCTURE ABOVE	1B10	10" METAL STUDS @ 24" O.C. TO UNDERSIDE OF STRUCTURE ABOVE

WALL TYPE 'B' - INTERIOR 1-HR WALL

Scale 3" = 1'-0" 8

BASIC PARTITION TYPE AND ADDITIONAL PARTITION COMPONENTS, IF ANY, ARE INDICATED ON THE 1/4" FLOOR PLANS BY THE FOLLOWING SYMBOL INCORPORATING A FOUR DIGIT NOTATION:

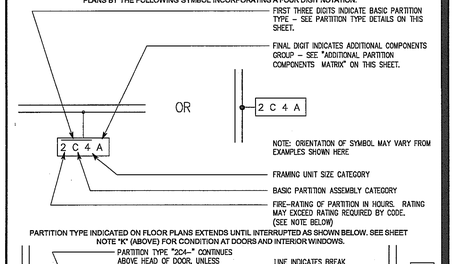

PARTITION TYPE INDICATED ON FLOOR PLANS EXTENDS UNTIL INTERRUPTED AS SHOWN BELOW. SEE SHEET NOTE "K" (ABOVE) FOR CONDITION AT DOORS AND INTERIOR WINDOWS.

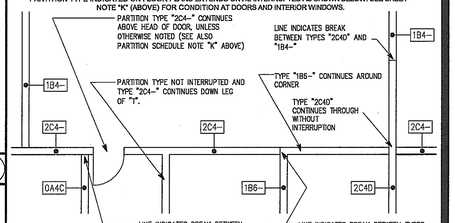

REFER TO STRUCTURAL DRAWINGS FOR ADDITIONAL WALL COMPONENTS (GAUGE, SCREWS, ETC) THAT MAY APPLY.

A. THE PURPOSE OF THIS SHEET IS TO DESCRIBE THE SYSTEM OF INTERIOR PARTITION TYPES WHICH IS UTILIZED ON THIS PROJECT. REFER TO THE FLOOR PLANS TO DETERMINE THE LOCATIONS AND EXTENT OF PARTITION TYPES REQUIRED.

C. REFER TO STRUCTURAL DRAWINGS FOR METAL FRAMED PARTITION DETAILS ILLUSTRATING CONDITIONS WHICH OCCUR WHERE THE PARTITION HEAD MEETS THE FLOOR OR ROOF STRUCTURE ABOVE.

E. REFER TO SHEET A8.2.3 FOR BACKING PLATE SCHEDULE AND MISCELLANEOUS PARTITION DETAILS, SEE STRUCTURAL DRAWINGS FOR ADDITIONAL STRUCTURAL INFORMATION.

F. REFER TO STRUCTURAL SHEET S___ FOR STUD GAGE MATRIX, REFER TO ARCHITECTURAL WALL TYPE SHEET A8.2.1 FOR WALL TYPES AND SIZE OF STUD.

D. NOT USED

G. RUN WALLBOARD TO UNDERSTRUCTURE ABOVE AT ALL WALLS UNLESS OTHERWISE NOTED

H. THE SOUND-RATED CONSTRUCTION LEVEL TO BE ACHIEVED IS DETERMINED BY WHICH, IF ANY, ADDITIONAL PARTITION COMPONENTS ARE APPLIED. REFER TO "ADDITIONAL PARTITION COMPONENTS MATRIX" TO DETERMINE WHICH LEVEL OF SOUND-RATED CONSTRUCTION APPLIES.

I. TYPICAL INTERIOR PARTITION TYPE UNLESS OTHERWISE NOTED IS "XXXX".

J. INSTALL ONE LAYER OF 5/8" THICK TYPE 'X' WATER RESISTANT GYPSUM BOARD IN LIEU OF FACE LAYER OF GYPSUM WALLBOARD (WHERE GYPSUM WALLBOARD OCCURS) OF BASIC PARTITION AT THE FOLLOWING LOCATIONS: JANITOR ROOMS, TOILET ROOMS, SHOWER AND TUB UNITS.

K. –ALL EXTERIOR WALLS ASSEMBLY TO BE OF 2–HR FIRE RATED CONSTRUCTION (U.N.O.).
–ALL INTERIOR BEARING WALLS TO BE OF 2–HR FIRE RATED CONSTRUCTION (U.N.O.)
–ALL INTERIOR NON–BEARING WALLS TO BE OF 1–HR FIRE RATED CONSTRUCTION (U.N.O.)
–ALL INTERIOR EXIT CORRIDOR WALLS TO BE OF 2–HR FIRE RATED CONSTRUCTION (U.N.O.)
–ALL SHAFT WALLS TO BE OF 2–HR FIRE RATED CONSTRUCTION (U.N.O.)

L. PROVIDE SMOKE SEAL AT ALL RATED PARTITIONS, AS NOTED ON BY ADDITIONAL COMPONENTS MATRIX. SEAL PERIMETER OF PARTITION WITH CONTINUOUS BEAD OF FIRE BARRIER SEALANT. CLOSE ALL GAPS THROUGH OR AROUND PARTITION BY SEALING ALL JOINTS, GAPS AROUND OUTLET BOXES, AND PENETRATIONS, INCLUDING THOSE ABOVE FINISH CEILINGS WITH AN APPROVED THROUGH PENETRATION FIRE STOP SYSTEM.

M. WALL TYPE ABBREVIATIONS:
FR = FIRE RATED NB = NON–BEARING
NR = NON–RATED INT = INTERIOR
BN = BEARING EXT= EXTERIOR

PARTITION SYMBOLS AND NOTES

Scale 3

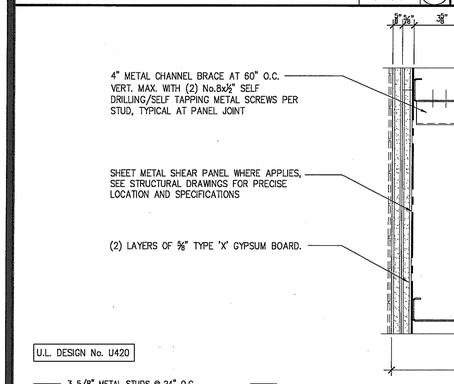

2J4	3 5/8" METAL STUDS @ 24" O.C. TO UNDERSIDE OF STRUCTURE ABOVE	2J6	NOT USED	2J8	NOT USEED	2J10	NOT USED

WALL TYPE 'J' - INTERIOR 2-HR SEPARATION WALL AT SHEARWALL IN CORRIDOR

Scale 3" = 1'-0" 15

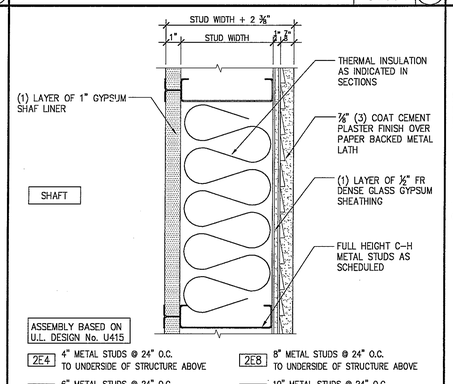

2E4	4" METAL STUDS @ 24" O.C. TO UNDERSIDE OF STRUCTURE ABOVE	2E8	8" METAL STUDS @ 24" O.C. TO UNDERSIDE OF STRUCTURE ABOVE
2E6	6" METAL STUDS @ 24" O.C. TO UNDERSIDE OF STRUCTURE ABOVE	2E10	10" METAL STUDS @ 24" O.C. TO UNDERSIDE OF STRUCTURE ABOVE

WALL TYPE 'E' - EXT. 2-HR SHAFT WALL

Scale 3" = 1'-0" 11

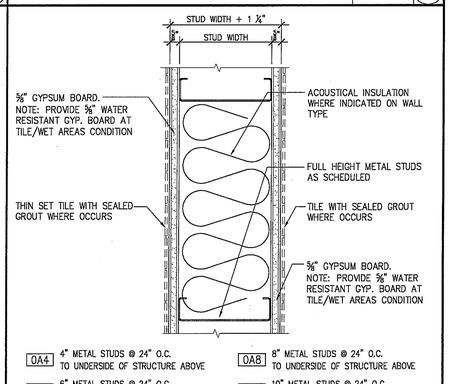

0A4	4" METAL STUDS @ 24" O.C. TO UNDERSIDE OF STRUCTURE ABOVE	0A8	8" METAL STUDS @ 24" O.C. TO UNDERSIDE OF STRUCTURE ABOVE
0A6	6" METAL STUDS @ 24" O.C. TO UNDERSIDE OF STRUCTURE ABOVE	0A10	10" METAL STUDS @ 24" O.C. TO UNDERSIDE OF STRUCTURE ABOVE

WALL TYPE 'A' - INTERIOR NR WALL

Scale 3" = 1'-0" 7

ADDITIONAL COMPONENTS GROUPS	– NO ADDITIONAL COMPONENT	A INTERIOR (1–HR) PARTITION	B INTERIOR (1–HR) PARTITION AT WET AREAS	C INTERIOR (2–HR) PARTITION	D INTERIOR (RATED) PARTITION AT WET AREAS	E 2–HOUR INTERIOR PARTITION AT CORRIDOR	F EXTERIOR (RATED) WALL	G EXTERIOR (RATED) WALL AT WET AREAS	H 2–HOUR SHAFT WALL	J 2–HOUR ELEVATOR SHAFT WALL	K 3 HOUR AREA SEPARATION WALL	L INTERIOR 1 HOUR ACOUSTICAL WALL	M INTERIOR NON–RATED PARTITION AT WET AREAS	N	NOTES
NO ADDITIONAL COMPONENTS	■														
NO 1: ADD ACOUSTIC SEALANT												■			SEE NOTE NO 1 BELOW
NO 2: ADD OUTLET BOX ACOUSTIC PADS												■			SEE NOTE NO 2 BELOW
NO 3: ADD ACOUSTIC INSULATION					■	■				■		■	■		SEE NOTE NO 3 BELOW
NO 4: WATER RESISTANT WALL			■		■			■				■	■		SEE NOTE NO 4 BELOW
NO 5: ACOUSTICAL WALL												■	■		SEE NOTE NO 5 BELOW
NO 6: ACOUSTICAL WALL															SEE NOTE NO 6 BELOW
NO 7: ACOUSTICAL WALL										■					SEE NOTE NO 7 BELOW
NO 8: SHAFT WALL									■						SEE NOTE NO 8 BELOW
NO 9: EXTEND GYPSUM BOARD TO STRUCTURE ABOVE		■	■	■	■	■	■	■	■	■	■	■			SEE NOTE NO 9 BELOW
NO 10: ADD THERMAL INSULATION							■	■	■		■				SEE NOTE NO 10 BELOW
NO 11: IMPACT RESISTANT GYPSUM BOARD											■				SEE NOTE NO 11 BELOW
NO 12: PARTIAL HEIGHT WALL															SEE NOTE NO 12 BELOW
NO 13: DOUBLE E STUDS															SEE NOTE NO 13 BELOW
NO 14: ADD FIRE SEALANT		■	■	■	■	■	■	■	■	■	■	■			SEE NOTE NO 14 BELOW
NO 15: ADD STRUCTURAL SHEAR COMPONENTS															SEE NOTE NO 15 BELOW

ADDITIONAL COMPONENTS NOTES:

1. FOR NON–RATED PARTITIONS SEAL PERIMETER OF PARTITION WITH CONTINUOUS BEAD OF ACOUSTICAL SEALANT. CLOSE OFF ALL SOUND–FLANKING PATHS THROUGH OR AROUND PARTITION BY SEALING ALL JOINTS, GAPS AT OUTLET BOXES AND FIXTURES, AND PENETRATIONS INCLUDING THOSE ABOVE FINISH CEILINGS. SEAL ALL DUCT, PIPE AND CONDUIT PENETRATIONS PER MECHANICAL DRAWINGS. PARTITION TO SEAL TO METAL DECK FLUTES.

2. PROVIDE ACOUSTICAL OUTLET BOX PADS AT ALL ELECTRICAL, TELEPHONE, AND DATA OUTLET BOXES AND ALL SWITCH BOXES. MOLD ACOUSTICAL OUTLET BOX PAD (07210.F) CAREFULLY AROUND BOX AFTER BOX IS SECURELY ATTACHED TO STUD AND BEFORE GYPSUM WALLBOARD IS INSTALLED. SEAL ALL OPENINGS WITH ACOUSTICAL SEALANT. 24" MINIMUM SPACING BETWEEN BOXES.

3. ACOUSTIC INSULATION TYPE A (NON–FACED, FRICTION FIT) IN STUD CAVITY. PROVIDE 2–1/2" THICK INSULATION WHERE STUD DEPTH IS 2–1/2". PROVIDE 3–1/2" THICK INSULATION WHERE STUD IS 3–5/8" OR GREATER. INSULATION TO EXTEND FROM BOTTOM OF PARTITION TO TOP OF GYPSUM BOARD.

4. 5/8" THICK WATER RESISTANT GYPSUM WALL BOARD ON WET SIDE OF WALL. SEALANT AT ALL JOINTS. PROVIDE ⅝" TYPE "X" WATER RESISTANT GYPSUM BOARD ON WET SIDE OF WALL AT ONE HOUR RATED WALLS.

5. ACOUSTICAL WALL MINIMUM REQUIREMENT: ONE LAYER OF 5/8" THICK TYPE X GYPSUM WALLBOARD TO EXTEND TO UNDERSIDE OF STRUCTURE ABOVE ON ONE SIDE OF PARTITION. ONE LAYER OF 5/8" THICK TYPE X GYPSUM BOARD TO EXTEND 6" ABOVE UNDERSIDE OF CEILING ON OTHER SIDE OF PARTITION.

6. WALL MINIMUM REQUIREMENT: ONE LAYER OF 5/8" THICK TYPE X GYPSUM WALLBOARD EACH SIDE TO EXTEND TO 6" ABOVE CEILING. EXTEND GYPSUM BOARD TO STRUCTURE ABOVE WHERE CEILING IS NON–EXISTING.

7. ACOUSTICAL WALL MINIMUM REQUIREMENT: TWO LAYERS OF 5/8" THICK TYPE X GYPSUM WALLBOARD TO EXTEND TO UNDERSIDE OF STRUCTURE ABOVE ON BOTH SIDES OF PARTITION.

8. SHAFT WALL MINIMUM REQUIREMENT: NO MECHANICAL EQUIPMENT OR CONTROL PANELS CAN BE MOUNTED ON THIS WALL. THIS WALL MUST NOT BE "PENETRATED EXCEPT WHERE NECESSARY FOR DUCTWORK, PIPEWORK, AND CABLING. WHERE DUCT, PIPE, AND CABLING PENETRATIONS ARE MADE, THEY MUST BE SEALED ACCORDING TO ADDITIONAL COMPONENT NO 14.

9. EXTEND 5/8" THICK GYPSUM WALLBOARD UP TO UNDERSIDE OF STRUCTURE ABOVE ON BOTH SIDES OF NON–COMBUSTIBLE PARTITION.

10. THERMAL BATT INSULATION (AS NOTED ON PLANS) FRICTION FIT IN STUD CAVITY.

11. PROVIDE 1/2" IMPACT RESISTANT GYPSUM IN OUTER LAYER ONLY IN GARAGE SIDE FULL HEIGHT OF WALL.

12. PARTIAL HEIGHT WALL, SEE DETAIL XX/XX TOP SURFACE OF TOP TRACK TO RECEIVE GYPSUM WALLBOARD FINISH. NO EXPOSED FRAMING ALLOWED.

13. PROVIDE 20 GAUGE DOUBLE E STUDS WITH THERMAL INSULATION.

14. FOR RATED PARTITIONS SEAL PERIMETER OF PARTITION WITH CONTINUOUS BEAD OF UL APPROVED FIRE SEALANT. CLOSE OFF ALL PATHS THROUGH OR AROUND PARTITION BY SEALING ALL JOINTS, GAPS AT OUTLET BOXES AND FIXTURES, AND PENETRATIONS INCLUDING THOSE ABOVE FINISH CEILINGS. SEAL ALL DUCT, PIPE AND CONDUIT PENETRATIONS PER MECHANICAL DRAWINGS. PARTITION TO SEAL TO METAL DECK FLUTES; FOR PARTITIONS HAVING DOUBLE LAYERS OF GYPSUM WALLBOARD, INSTALL FACE LAYER PERPENDICULAR TO BASE LAYER AND STAGGER JOINTS OF EACH LAYER. SEAL JOINTS OF BOTH BASE AND FACE LAYER WITH TAPE AND JOINT COMPOUND.

15. USE ⅝" SURE–BOARD SHEAR PANEL IN BASE LAYER AS INDICATED IN WALL TYPE. REFER TO STRUCTURAL SPECIFICATIONS FOR ADDITIONAL INFORMATION

NOTE:

SEE SHEET A8.2.2 & A8.2.3 FOR TYPICAL WALL ASSEMBLY DETAILS

Walltype–schedule.dwg

Additional Componets Matrix

Scale 1

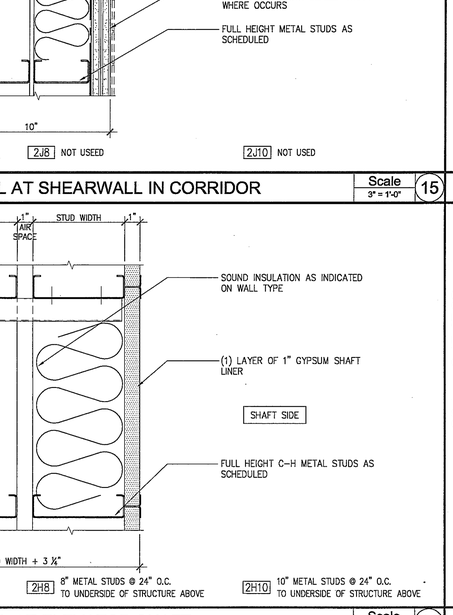

2H4	4" METAL STUDS @ 24" O.C. TO UNDERSIDE OF STRUCTURE ABOVE	2H6	6" METAL STUDS @ 24" O.C. TO UNDERSIDE OF STRUCTURE ABOVE	2H8	8" METAL STUDS @ 24" O.C. TO UNDERSIDE OF STRUCTURE ABOVE	2H10	10" METAL STUDS @ 24" O.C. TO UNDERSIDE OF STRUCTURE ABOVE

WALL TYPE 'G' - INTERIOR 2-HR SEPARATION WALL

Scale 3" = 1'-0" 13

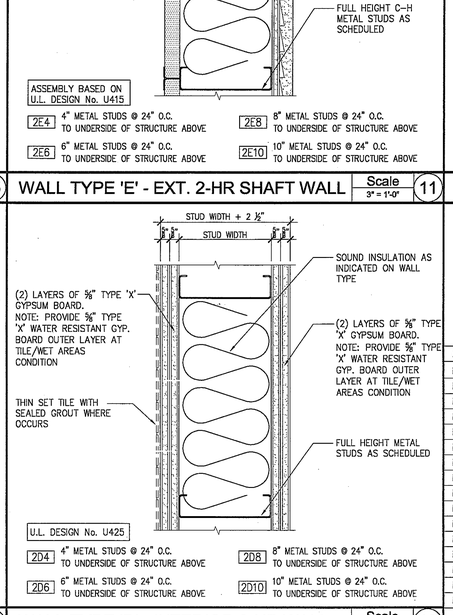

2C4	4" METAL STUDS @ 24" O.C. TO UNDERSIDE OF STRUCTURE ABOVE	2C6	6" METAL STUDS @ 24" O.C. TO UNDERSIDE OF STRUCTURE ABOVE	2C8	8" METAL STUDS @ 24" O.C. TO UNDERSIDE OF STRUCTURE ABOVE	2C10	10" METAL STUDS @ 24" O.C. TO UNDERSIDE OF STRUCTURE ABOVE

WALL TYPE 'C' - EXTERIOR 2-HR WALL

Scale 3" = 1'-0" 9

2D4	4" METAL STUDS @ 24" O.C. TO UNDERSIDE OF STRUCTURE ABOVE	2D6	6" METAL STUDS @ 24" O.C. TO UNDERSIDE OF STRUCTURE ABOVE	2D8	8" METAL STUDS @ 24" O.C. TO UNDERSIDE OF STRUCTURE ABOVE	2D10	10" METAL STUDS @ 24" O.C. TO UNDERSIDE OF STRUCTURE ABOVE

WALL TYPE 'D' - INTERIOR 2-HR WALL

Scale 3" = 1'-0" 10

2G4	4" METAL STUDS @ 24" O.C. TO UNDERSIDE OF STRUCTURE ABOVE	2G6	6" METAL STUDS @ 24" O.C. TO UNDERSIDE OF STRUCTURE ABOVE	2G8	8" METAL STUDS @ 24" O.C. TO UNDERSIDE OF STRUCTURE ABOVE	2G10	10" METAL STUDS @ 24" O.C. TO UNDERSIDE OF STRUCTURE ABOVE

WALL TYPE 'H' - INTERIOR 2-HR SEPARATION WALL AT ELEVATOR SHAFT

Scale 3" = 1'-0" 14

WWCOT
Widom Wein Cohen O'Leary Terasawa
3130 Wilshire Boulevard
Sixth Floor
Santa Monica, California 90403
T (310) 828-0040
F (310) 453-9432
www.wwcot.com
Inland Empire
Palm Springs
Moorpark
Shanghai, China

RECEIVED
10:08 am, Aug 14, 2008
FRAMEMAX

Building Department Submittal: June 1, 2007
Issued For Bid: _____
Issued For Construction: _____



KEY PLAN

Project:
Jewish Home for The Aging
FOUNTAINVIEW AT EISENBERG VILLAGE
6440 Wilbur Ave
Reseda, CA. 91335
JEWISH HOME
JEWISH HOME FOR THE AGING
18855 Victory Blvd.
Reseda, CA 91335
Project Number: 04206.00

WALL TYPE SCHEDULE AND NOTES

Date: 04/05/2007
Drawn By: _____
Checked By: _____

A8.2.1
Sheet No.

File Path & Name: F:\PROJECTS\04206-00\A-CD\SHEETS\A08.2.1.DWG
© WWCOT 2006 May 28, 2007 - 03:52 pm

RECEIVED BY SUFFOLK ON 06/01/07

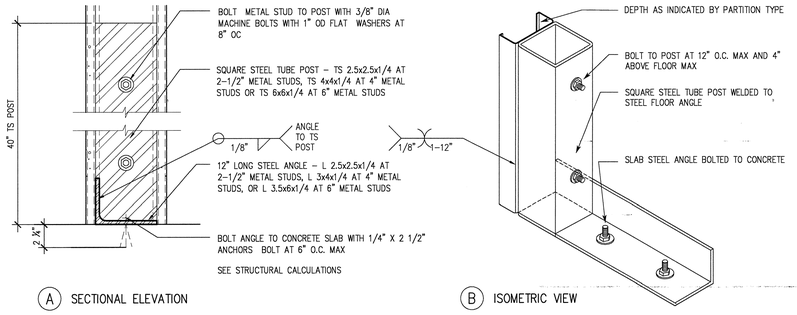

A SECTIONAL ELEVATION

B ISOMETRIC VIEW

TYPICAL AT CORNERS, ENDS, AND AT 4'-0" OC MAX BETWEEN PARTIAL HEIGHT PARTITION BRACING ANCHORAGE

Assembly Detail_03.DWG

Scale 3" = 1'-0" | 16

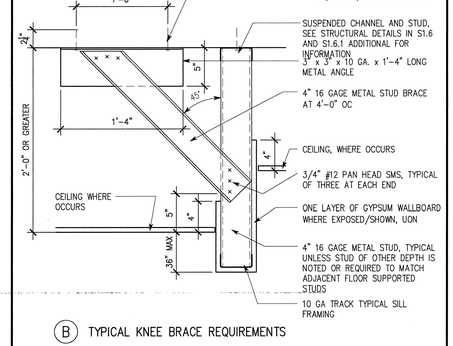

B TYPICAL KNEE BRACE REQUIREMENTS

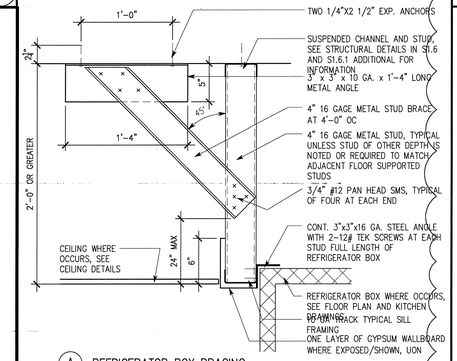

A REFRIGERATOR BOX BRACING

Assembly Detail_04.dwg

SUSPENDED FRAME SOFFIT DETAIL

Scale 1 1/2" = 1'-0" | 11

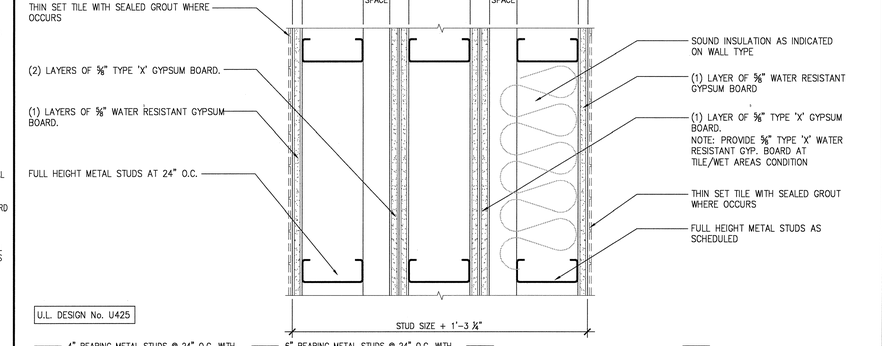

U.L. DESIGN No. U425

2Q4 4" BEARING METAL STUDS @ 24" O.C. WITH 4" PLUMBING STUDS @ 24" O.C.

2Q6 6" BEARING METAL STUDS @ 24" O.C. WITH 4" PLUMBING STUDS @ 24" O.C.

2Q8 NOT USEED

2Q10 NOT USED

WALL TYPE 'Q' - INTERIOR 2-HR BEARING DOUBLE PLUMBING WALL

Scale 3" = 1'-0" | 4

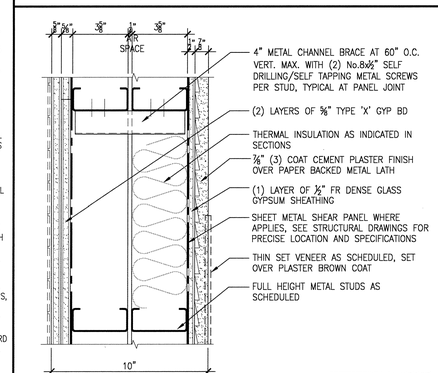

2T4 3 5/8" METAL STUDS @ 24" O.C. TO UNDERSIDE OF STRUCTURE ABOVE

ASSEMBLY BASED ON U.L. DESIGN No. U420

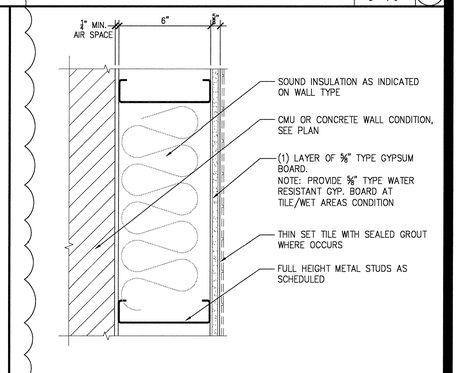

0P4 4" METAL STUDS @ 24" O.C. TO UNDERSIDE OF STRUCTURE ABOVE

0P6 6" METAL STUDS @ 24" O.C. TO UNDERSIDE OF STRUCTURE ABOVE

WALL TYPE 'T' - 2-HR EXT SHEARWALL

Scale 3" = 1'-0" | 7

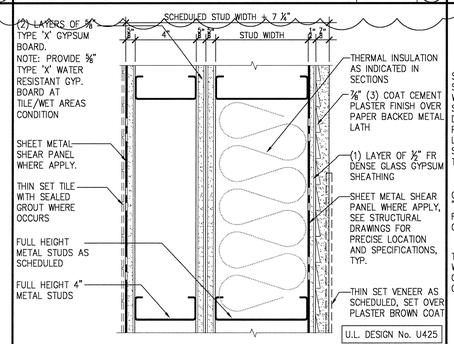

U.L. DESIGN No. U425

2S4 4" METAL STUDS @ 24" O.C. TO UNDERSIDE OF STRUCTURE ABOVE

2S6 6" METAL STUDS @ 24" O.C. TO UNDERSIDE OF STRUCTURE ABOVE

2S8 8" METAL STUDS @ 24" O.C. TO UNDERSIDE OF STRUCTURE ABOVE

2S10 10" METAL STUDS @ 24" O.C. TO UNDERSIDE OF STRUCTURE ABOVE

WALL TYPE 'P' - NC INT. FURRING WALL

Scale 3" = 1'-0" | 2

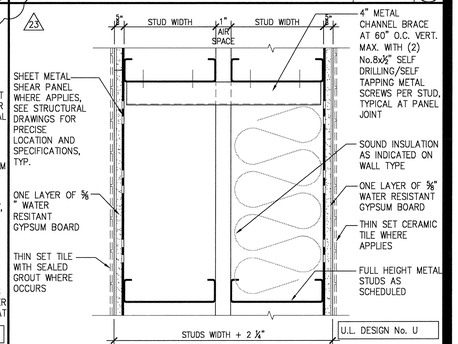

U.L. DESIGN No. U

1N4 4" METAL STUDS @ 24" O.C. TO UNDERSIDE OF STRUCTURE ABOVE

1N6 6" METAL STUDS @ 24" O.C. TO UNDERSIDE OF STRUCTURE ABOVE

1N8 8" METAL STUDS @ 24" O.C. TO UNDERSIDE OF STRUCTURE ABOVE

1N10 10" METAL STUDS @ 24" O.C. TO UNDERSIDE OF STRUCTURE ABOVE

WALL TYPE 'S' - EXT. 2-HR PLUMB. WALL

Scale 3" = 1'-0" | 6

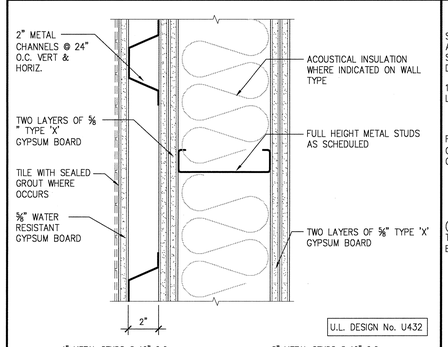

U.L. DESIGN No. U432

1R4 4" METAL STUDS @ 16" O.C. TO UNDERSIDE OF STRUCTURE ABOVE

1R6 6" METAL STUDS @ 16" O.C. TO UNDERSIDE OF STRUCTURE ABOVE

1R8 8" METAL STUDS @ 16" O.C. TO UNDERSIDE OF STRUCTURE ABOVE

1R10 10" METAL STUDS @ 16" O.C. TO UNDERSIDE OF STRUCTURE ABOVE

0-walltype-schedule.dwg

WALL TYPE 'N' - INT. 1-HR PLUMB. WALL

Scale 3" = 1'-0" | 2

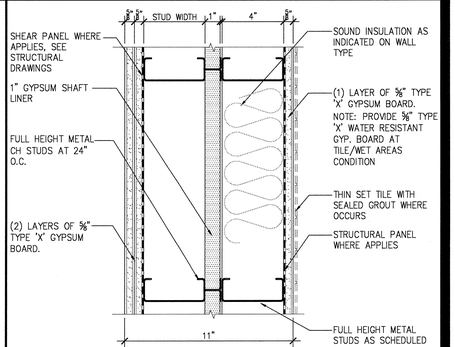

U.L. DESIGN No. U415

2M4 4" BEARING CH METAL STUDS @ 24" O.C. W/ 4" PLUMBING STUDS @ 24" O.C.

2M6 6" BEARING CH METAL STUDS @ 24" O.C. W/ 4" PLUMBING STUDS @ 24" O.C.

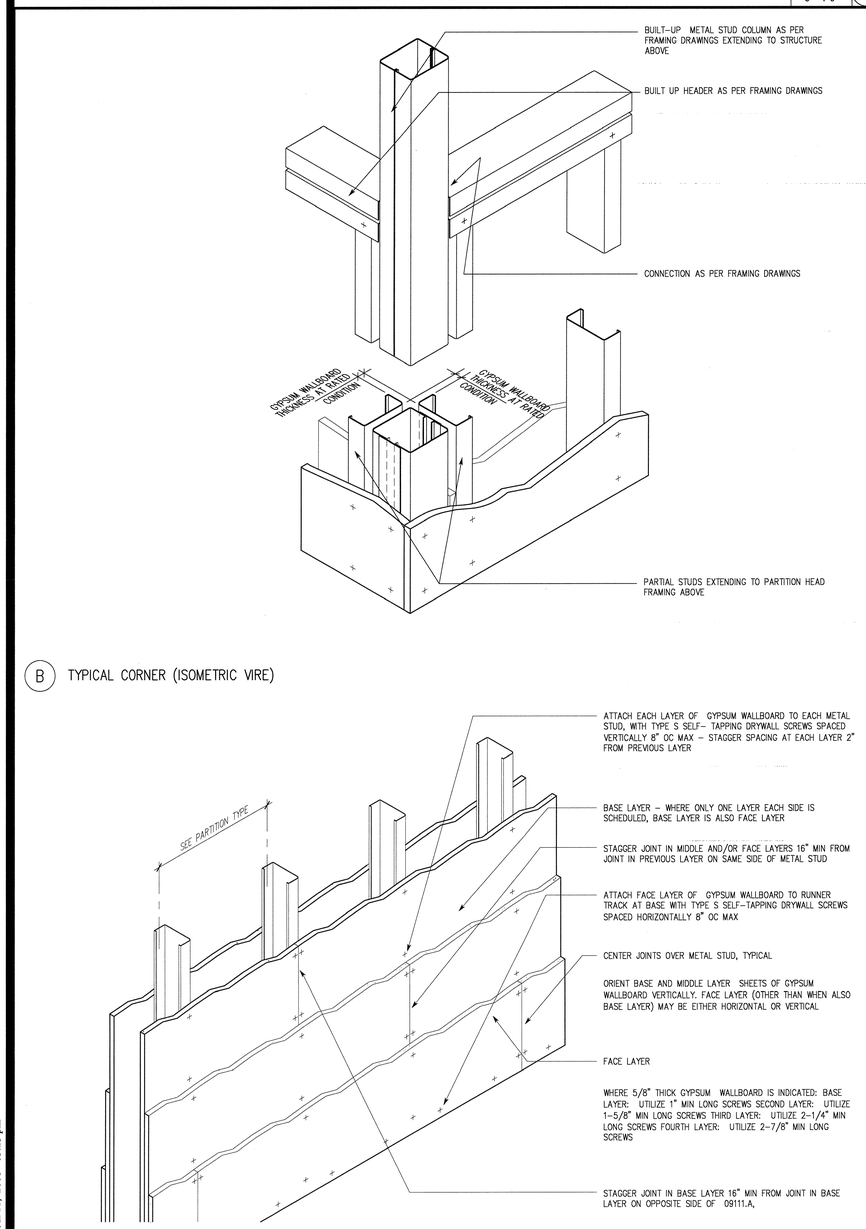

B TYPICAL CORNER (ISOMETRIC VIRE)

A GYPSUM BOARD ATTACHMENT REQUIREMENTS
TYPICAL (UNLESS MORE RESTRICTIVE REQUIREMENTS ARE NOTED BY FIRE–RATING REFERENCED ON PARTITION WALL TYPES ON A8.2.1)

Assembly Detail_02.DWG

WALL FRAMING DETAILS

Scale NTS | 13

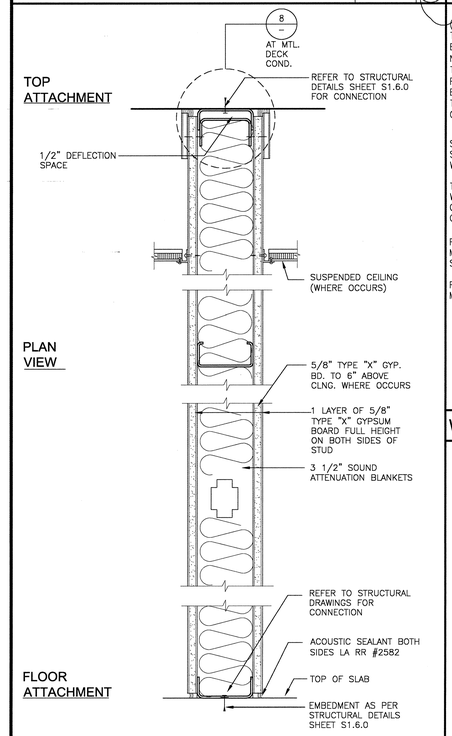

NOTES:

1– FIRE RATING: 1 HR
U.L. #U465

2–USE 5/8",LARR #24588 GLASS MESH REINFORCED CEMENT BOARD IN PLACE OF GYP. BD. WHERE CERAMIC TILE OCCURS

1hrWall.dwg

ONE HOUR RATED INTERIOR WALL

Scale 3"=1'-0" | 9

WALL TYPE R - INT. 1-HR PLUMB. WALL

Scale 3" = 1'-0" | 5

WALL TYPE 'M' - INT. 2-HR PLUMB. WALL

Scale 3" = 1'-0" | 1

WWC OT
Widom Wein Cohen O'Leary Terasawa

3130 Wilshire Boulevard
Sixth Floor
Santa Monica, California 90403
T (310) 828-0040
F (310) 453-9432
www.wwcot.com

Inland Empire
Palm Springs
Moorpark
Shanghai, China

RECEIVED
10:08 am, Aug 14, 2008
FRAMEMAX

Building Department Submittal: June 1, 2007
Issued For Bid: ———
Issued For Construction: January 29, 2008

23 07–10–2008 UNIT PLAN REVISIONS

RECEIVED
JUL 17 2008
SUFFOLK CONSTRUCTION
RECEIVED
JUL 14 2008
SUFFOLK CONSTRUCTION

KEY PLAN

Project:
Jewish Home for The Aging
FOUNTAINVIEW AT EISENBERG VILLAGE
6440 Wilbur Ave
Reseda, CA. 91335

JEWISH HOME FOR THE AGING
18855 Victory Blvd.
Reseda, CA 91335

Project Number: 04206.00

Wall Types and General Wall Construction Details

Date: 01/21/2008
Drawn By: ———
Checked By: ———

A8.2.2
Sheet No.

File Path & Name: F:\PROJECTS\04206-00\A-CD\SHEETS\A08.2.2.DWG
© WWCOT 2006 Jul 11, 2008 - 03:23 pm

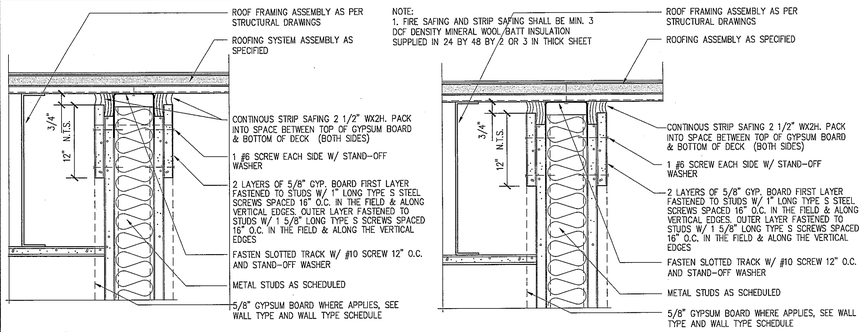

(A) PERPENDICULAR TO DECK FLUTES, 1 & 2HOUR RATED
TOP TRACK SECTION
UL # HW-D-0028

(B) PARALLEL TO DECK FLUTES, 1 & 2HOUR RATED
TOP TRACK SECTION

Assembly Detail_08.DWG

One Hour Wall Head Connection

Scale 3" = 1'-0" | 16

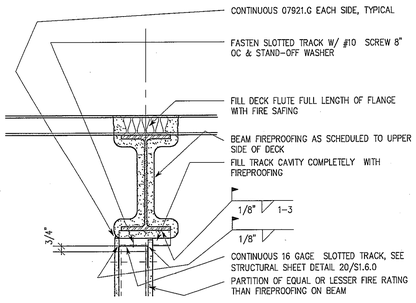

(E) FIRE-RATED PARTITION (3 HR MAX)
BELOW BEAM WITH EQUAL OR GREATER FIRE-PROOFING RATING

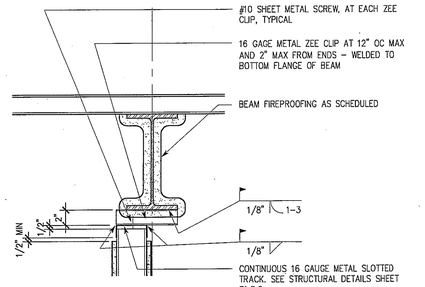

(C) NON-COMBUSTIBLE PARTITION
TYPICAL BELOW PARALLEL STEEL BEAM FLANGE

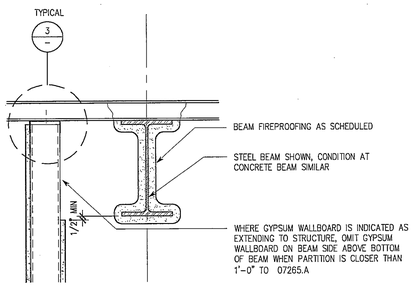

(B) NON-COMBUSTIBLE PARTITION
TYPICAL WITHIN 12" OF PARALLEL BEAM

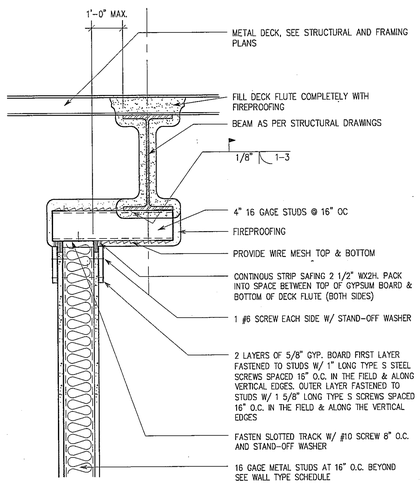

(D) FIRE-RATED PATITION (3 HR MAX)
BELOW BEAM WITH EQUAL OR GREATER FIRE-PROOFING RATING

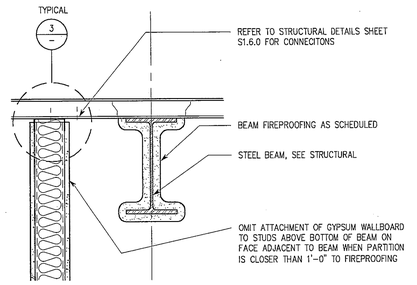

(A) NON-COMBUSTIBLE ACOUSTICAL PARTITION
WHERE PARTITION OCCURS PARALLEL TO BEAM

TYPICAL PARTITION HEAD DETAILS

Scale 1 1/2" = 1'-0" | 13

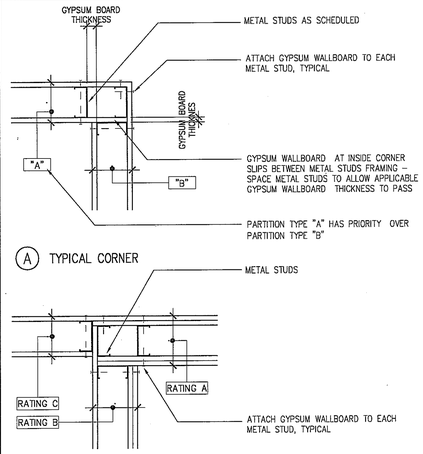

(A) TYPICAL CORNER

(B) THREE-WAY INTERSECTION
EXAMPLE OF THREE DIFFERENT PARTITION TYPES

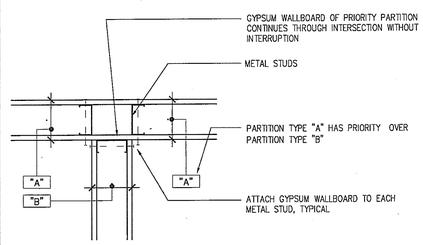

(C) THREE-WAY INTERSECTION
PRIORITY PARTITION CONTINUES WITHOUT INTERRUPTION

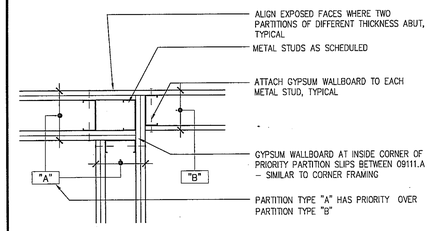

(D) THREE-WAY INTERSECTION
PRIORITY PARTITION CHANGES DIRECTION

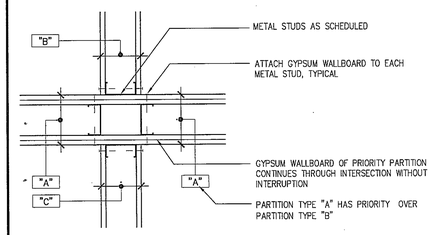

(E) FOUR-WAY INTERSECTION
PRIORITY PARTITION CONTINUES WITHOUT INTERRUPTION

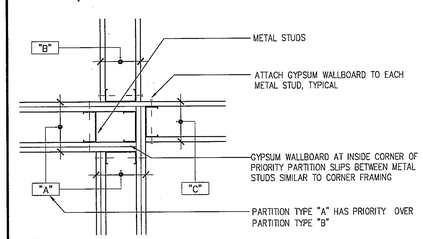

(F) FOUR-WAY INTERSECTION
PRIORITY PARTITION CHANGES DIRECTION

NOTE: SEE FLOOR PLANS TO DETERMINE ACTUAL LIMITS OF EACH PARTITION TYPE

Assembly Detail_07.DWG

Assembly Detail_01.DWG

TYPICAL WALL INTERSECTION DETAILS

Scale 3" = 1'-0" | 9

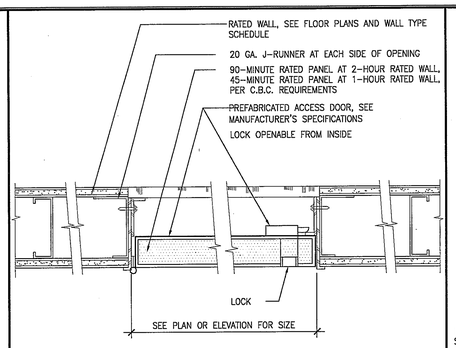

a-dtl-part-accesspanel_01.dwg

ACCESS PANEL IN RATED WALL DETAIL

Scale 3" = 1'-0" | 8

FIRE EXTINGUISHER TYPES

RATING	WHERE USED
2A:10B:C (5 LB.)	GENERAL USE: CORRIDORS, HEALTH ROOMS, ADMINISTRATION, SPECIAL USE ROOMS, EXCERSISE ROOMS, FOOD AND DRINK SERVICE AREAS (EXCEPT KITCHEN), DINING AREAS & THEATER.
2A:10B:C (10 LB.)	UNDERGROUND PARKING GARAGE
40B:C (5 LB.)	ELECTRICAL & MECHANICAL
K	KITCHEN
5B:C (5 LB.)	LAN ROOMS.
SEE SPECIFICATIONS, SECTION 10520 FOR FIRE EXTINGUISHER MANUFACTURER INFORMATION	

fire-08.dwg

FIRE EXTINGUISHER SCHEDULE

Scale NO SCALE | 7

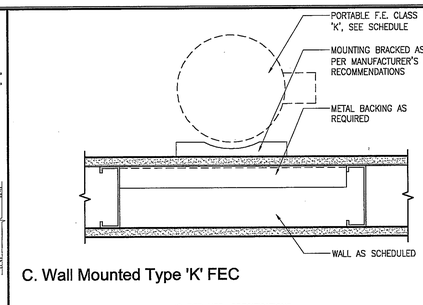

C. Wall Mounted Type 'K' FEC

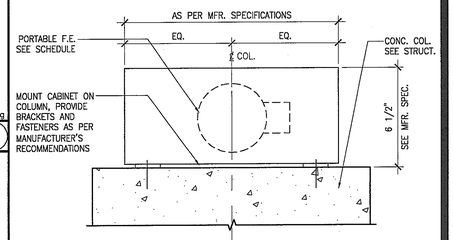

B. Concrete Column Mounted

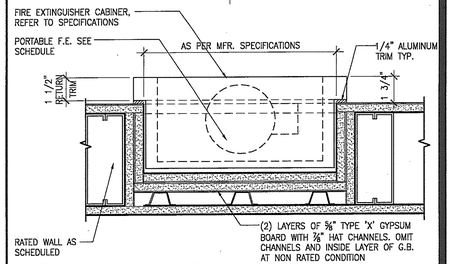

A. Recessed in 2-Hour Partition

a-dtl-fec07.dwg

FIRE EXTINGUISHER DETAILS

Scale 3" = 1'-0" | 3

(A) NOT USED

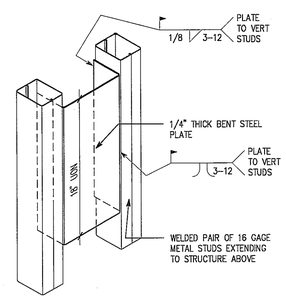

(C) BACKING PLATE TYPE C

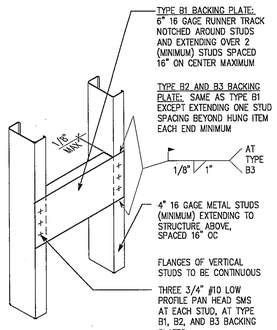

(B) BACKING PLATE TYPES B1, B2 AND B3

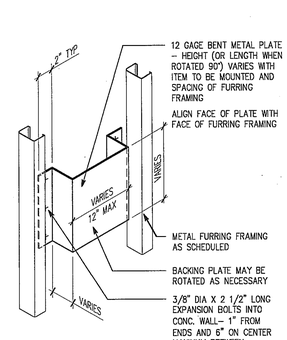

(D) BACKING PLATE TYPE D

GENERAL BACKING PLATE NOTES

1. PROVIDE BACKING PLATES AS INDICATED ON THE DRAWINGS OR, WHERE NOT INDICATED, ACCORDING TO THE FOLLOWING SCHEDULE:

TYPE B1 BACKING PLATE:

- AT SMALL ITEMS (SUCH AS TOILET ACCESSORIES, MIRRORS, CLOTHES HOOKS, DOOR STOPS ETC) WHICH WEIGH OR SUPPORT WEIGHTS OF LESS THAN 50 POUNDS

TYPE B2 BACKING PLATE:

- AT ALL UPPER WALL-HUNG CABINETS
- AT ALL BASE CABINETS
- AT ALL FULL HEIGHT CABINETS
- AT ALL WALL-MOUNTED HANDRAILS, GUARDRAILS, GRAB BARS, BUMPER RAILS, CRASH RAILS
- AT WALL-MOUNTED ADJUSTABLE SHELVING & KITCHEN SHELVING

TYPE B3 BACKING PLATE:

- AT WALL-MOUNTED ITEMS AS INDICATED ON ANCHORAGE DETAILS
- AT WALL-MOUNTED TOILET PARTITIONS

TYPE C BACKING PLATE:

- AT WALL-MOUNTED EQUIPMENT AS INDICATED ON THE DRAWINGS

TYPE D BACKING PLATE:

- IN LIEU OF BACKING PLATE TYPES B THRU C WHERE DEPTH OF METAL FRAMING AT FURRING OVER CONCRETE OR CMU WALL IS LESS THAN 4".

2. COORDINATE LOCATION, LENGTH, HEIGHT, AND NUMBER OF BACKING PLATES REQUIRED WITH ITEM TO BE MOUNTED.
3. FOR METHOD OF ATTACHMENT OF ITEM TO BE MOUNTED, REFER TO THE APPLICABLE DETAIL OR, IF NOT DETAILED, THE INSTRUCTIONS PROVIDED BY THE MANUFACTURER.

a-dt-ptn-05.dwg

BACKING PLATE SCHEDULE

Scale NTS | 1

WWC OT
Widom Wein Cohen O'Leary Terasawa
3130 Wilshire Boulevard
Sixth Floor
Santa Monica, California 90403
T (310) 828-0040
F (310) 453-9432
www.wwcot.com
Inland Empire
Palm Springs
Moorpark
Shanghai, China

RECEIVED
10:08 am, Aug 14, 2008
FRAMEMAX

Building Department
Submittal: June 1, 2007
Issued For Bid:
Issued For Construction:

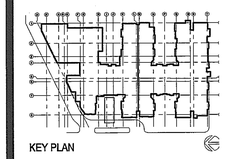

KEY PLAN

Project:
Jewish Home for The Aging
FOUNTAINVIEW AT EISENBERG VILLAGE
6440 Wilbur Ave
Reseda, CA. 91335

JEWISH HOME FOR THE AGING
18855 Victory Blvd.
Reseda, CA 91335

Project Number: 04206.00

General Wall Construction Details

Date: 04/05/2007
Drawn By:
Checked By:

A8.2.3
Sheet No.

File Path & Name: F:\PROJECTS\04206.00\A-CD\SHEETS\A08.2.3.DWG
© WWCOT 2006 May 28, 2007 - 03:52 pm

RECEIVED BY SUFFOLK ON 06/01/07

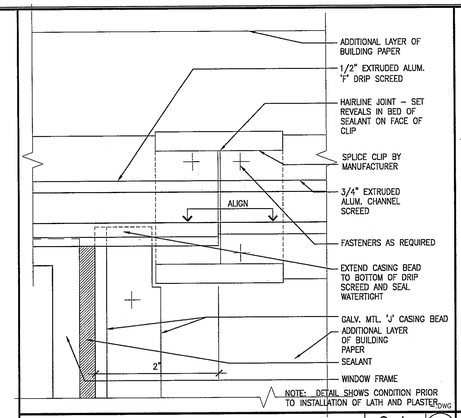

Window Head Drip Screed Splice Elevation — Scale: FULL SCALE — 8

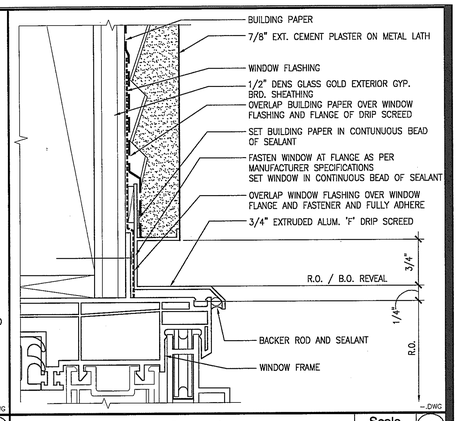

Window Head Drip Screed — Scale: FULL SCALE — 4

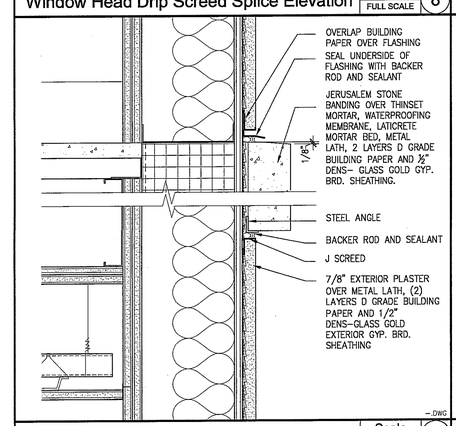

EXT. JERUSALEM STONE BANDING — Scale: 3" = 1'-0" — 7

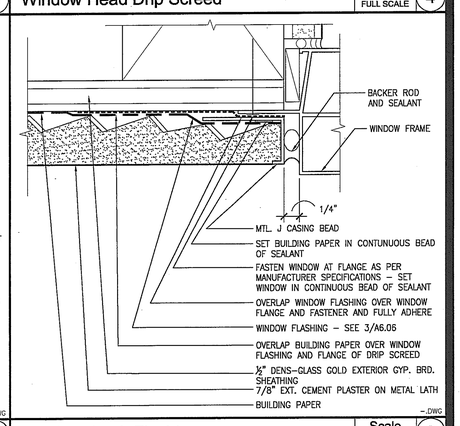

Window Jamb Flashing — Scale: FULL SCALE — 3

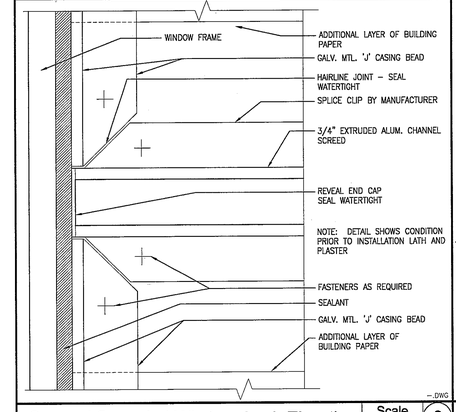

Channel Screed at Window Jamb Elevation — Scale: FULL SCALE — 6

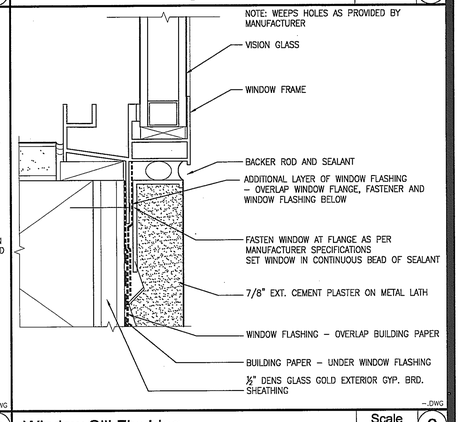

Window Sill Flashing — Scale: FULL SCALE — 2

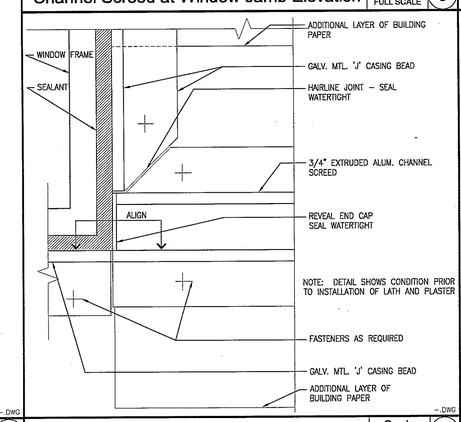

Channel Screed at Window Sill Elevation — Scale: FULL SCALE — 5

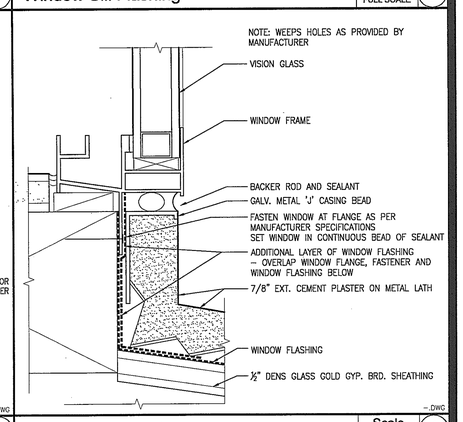

Window Sill Flashing — Scale: FULL SCALE — 1

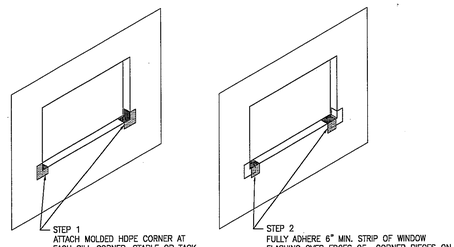

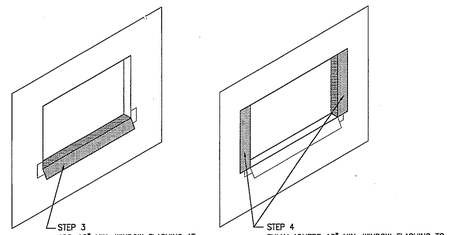

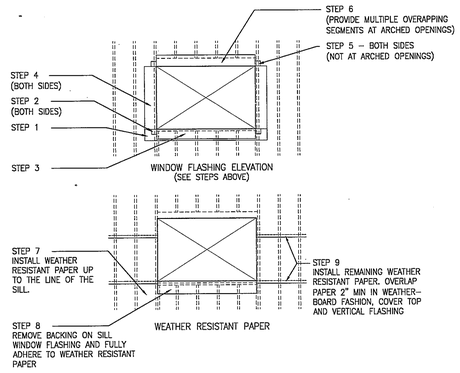

Window Flashing - Storefront Windows — Scale: 1/4" = 1'-0" — 9

NOT USED — Scale — 17

WWC OT
Widom Wein Cohen O'Leary Terasawa

3130 Wilshire Boulevard
Sixth Floor
Santa Monica, California 90403
T (310) 828-0340
F (310) 453-9432
www.wwcot.com

Inland Empire
Palm Springs
Moorpark
Shanghai, China

RECEIVED
10:08 am, Aug 14, 2008
FRAMEMAX

Building Department Submittal: June 1, 2007
Issued For Bid:
Issued For Construction:

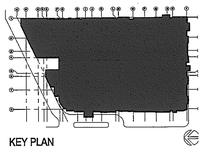

KEY PLAN

Project:
Jewish Home for The Aging
FOUNTAINVIEW AT EISENBERG VILLAGE
6440 Wilbur Ave
Reseda, CA. 91335
JEWISH HOME
JEWISH HOME FOR THE AGING
18855 Victory Blvd.
Reseda, CA 91335
Project Number: 04206.00

WINDOW DETAILS

Date: 04/05/2007
Drawn By:
Checked By:

A8.6.1
Sheet No.

File Path & Name: F:\PROJECTS\04206-00\A-CD\SHEETS\A8.6.1.DWG
© WWCOT 2006 May 28, 2007 - 03:53 pm

RECEIVED BY SUFFOLK ON 06/01/07

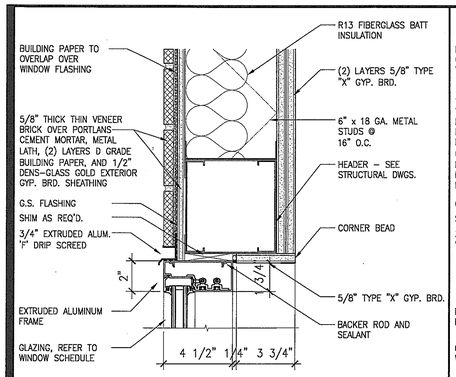

WINDOW HEAD DETAIL - BRICK | Scale 1 1/2"=1'-0" | 20

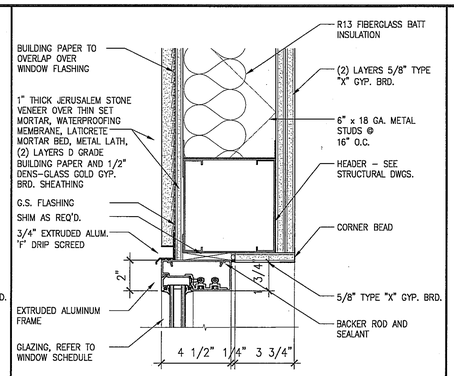

WINDOW HEAD DETAIL - STUCCO | Scale 1 1/2"=1'-0" | 16

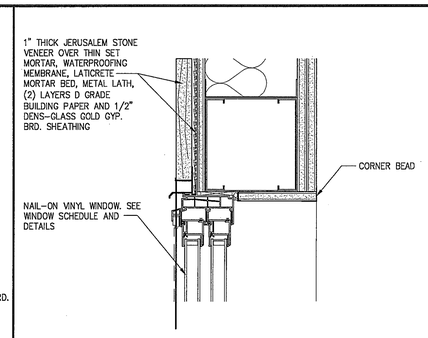

WINDOW HEAD DETAIL - STONE | Scale 1 1/2"=1'-0" | 12

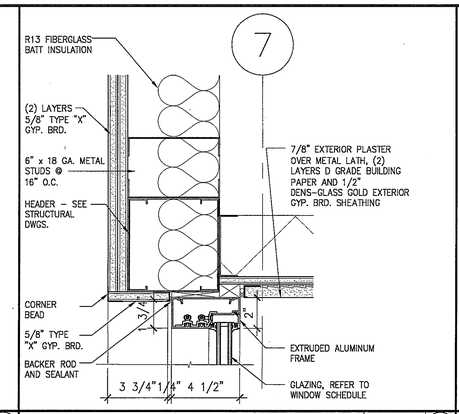

STOREFRONT WINDOW HEAD DETAIL | Scale 1 1/2"=1'-0" | 8

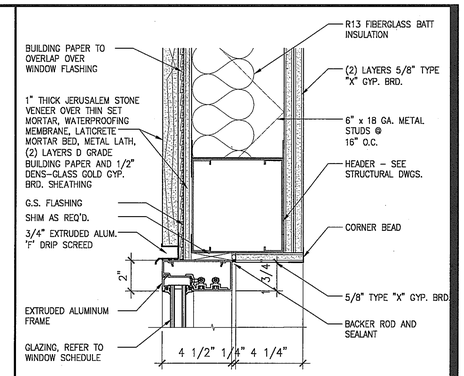

STOREFRONT WINDOW HEAD DETAIL | Scale 1 1/2"=1'-0" | 4

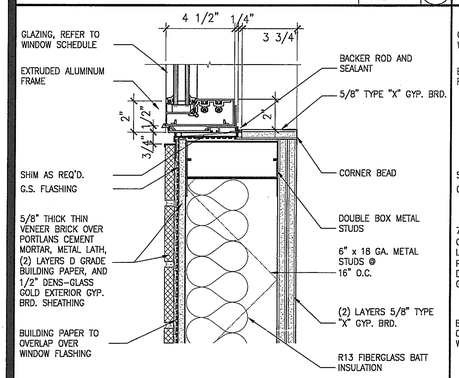

WINDOW SILL DETAIL - BRICK | Scale 1 1/2"=1'-0" | 19

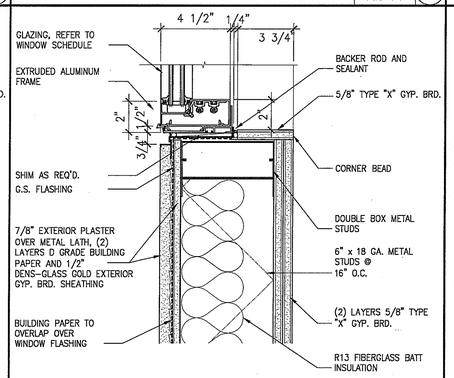

WINDOW SILL DETAIL - STUCCO | Scale 1 1/2"=1'-0" | 15

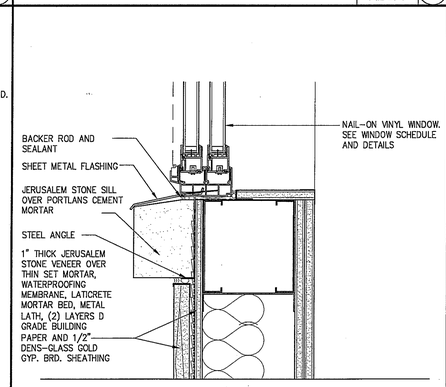

WINDOW SILL DETAIL - STONE | Scale 1 1/2"=1'-0" | 11

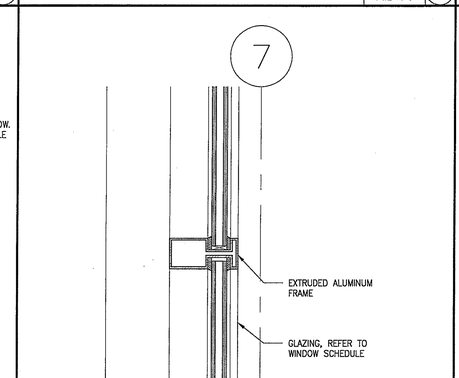

STOREFRONT VERTICAL MULLION DETAIL | Scale 1 1/2"=1'-0" | 7

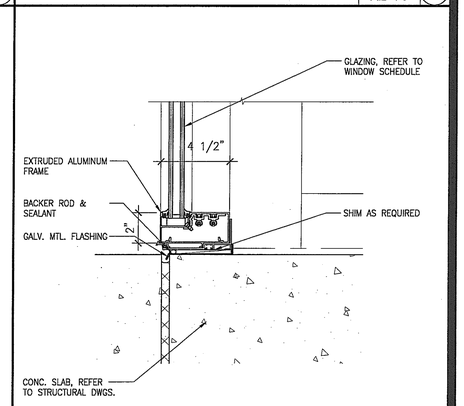

STOREFRONT WINDOW SILL DETAIL | Scale 1 1/2"=1'-0" | 3

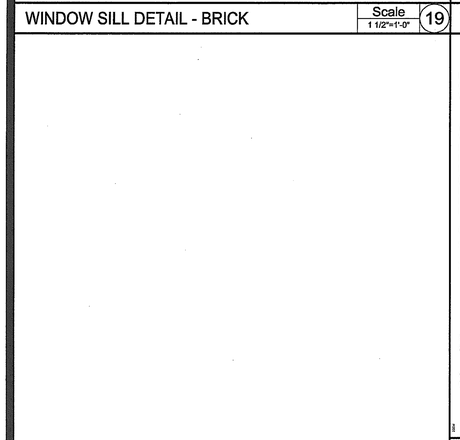

NOT USED | Scale 1 1/2" = 1'-0" | 17

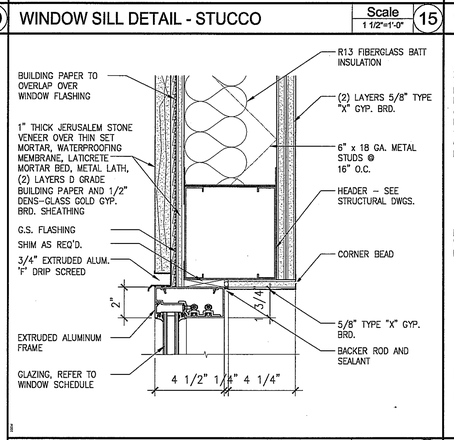

WINDOW SILL DETAIL - STUCCO | Scale 1 1/2"=1'-0" | 13

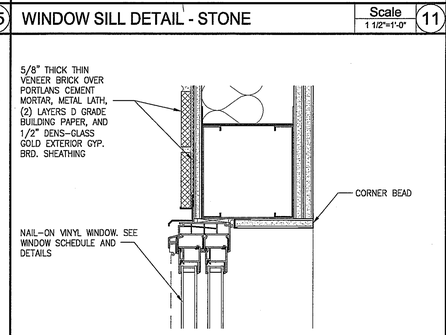

WINDOW SILL DETAIL - BRICK | Scale 1 1/2"=1'-0" | 9

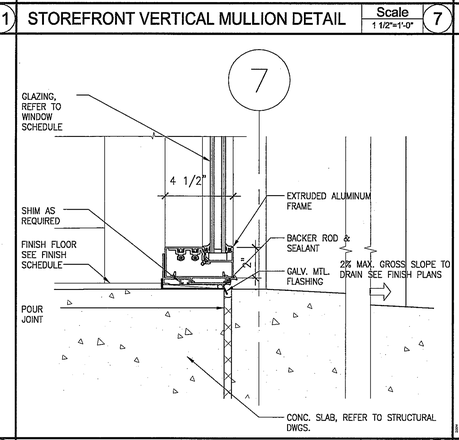

STOREFRONT WINDOW SILL DETAIL | Scale 3"=1'-0" | 6

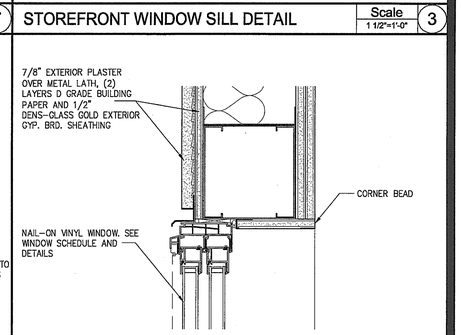

WINDOW HEAD DETAIL - STUCCO | Scale 3"=1'-0" | 2

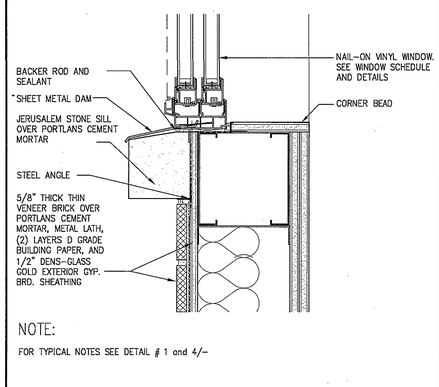

WINDOW SILL DETAIL - BRICK | Scale 1 1/2"=1'-0" | 10

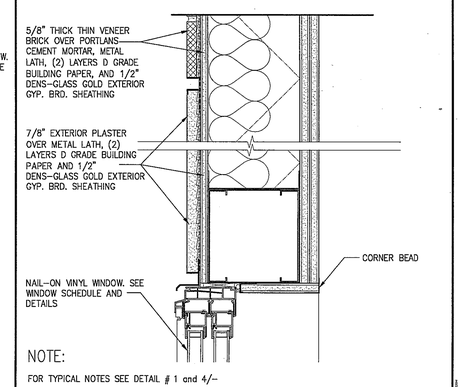

WINDOW HEAD DETAIL - STUCCO/BRICK | Scale 3"=1'-0" | 5

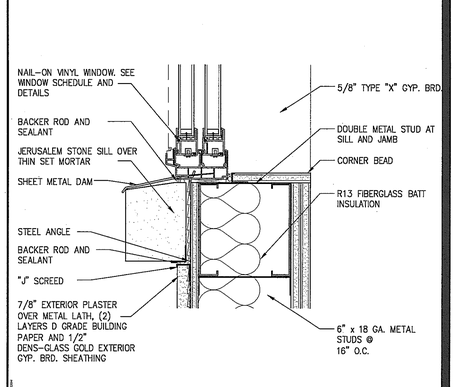

WINDOW SILL DETAIL - STUCCO | Scale 3"=1'-0" | 1

WWC OT
Widom Wein Cohen O'Leary Terasawa
3130 Wilshire Boulevard
Sixth Floor
Santa Monica, California 90403
T (310) 828-0040
F (310) 453-9432
www.wwcot.com
Inland Empire
Palm Springs
Moorpark
Shanghai, China

RECEIVED
10:08 am, Aug 14, 2008
FRAMEMAX

Building Department
Submittal: June 1, 2007
Issued For Bid: ____
Issued For Construction: ____

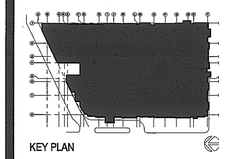

KEY PLAN

Project:
Jewish Home for The Aging
FOUNTAINVIEW AT EISENBERG VILLAGE
6440 Wilbur Ave
Reseda, CA. 91335
JEWISH HOME
JEWISH HOME FOR THE AGING
18855 Victory Blvd.
Reseda, CA 91335
Project Number: 04206.00

WINDOW DETAILS

Date: 04/05/2007
Drawn By: ____
Checked By: ____

A8.6.2
Sheet No.

File Path & Name: F:\PROJECTS\04206-00\A-CD\SHEETS\A8.6.2.DWG
© WWCOT 2006 May 28, 2007 - 12:53 pm

RECEIVED BY SUFFOLK ON 06/01/07

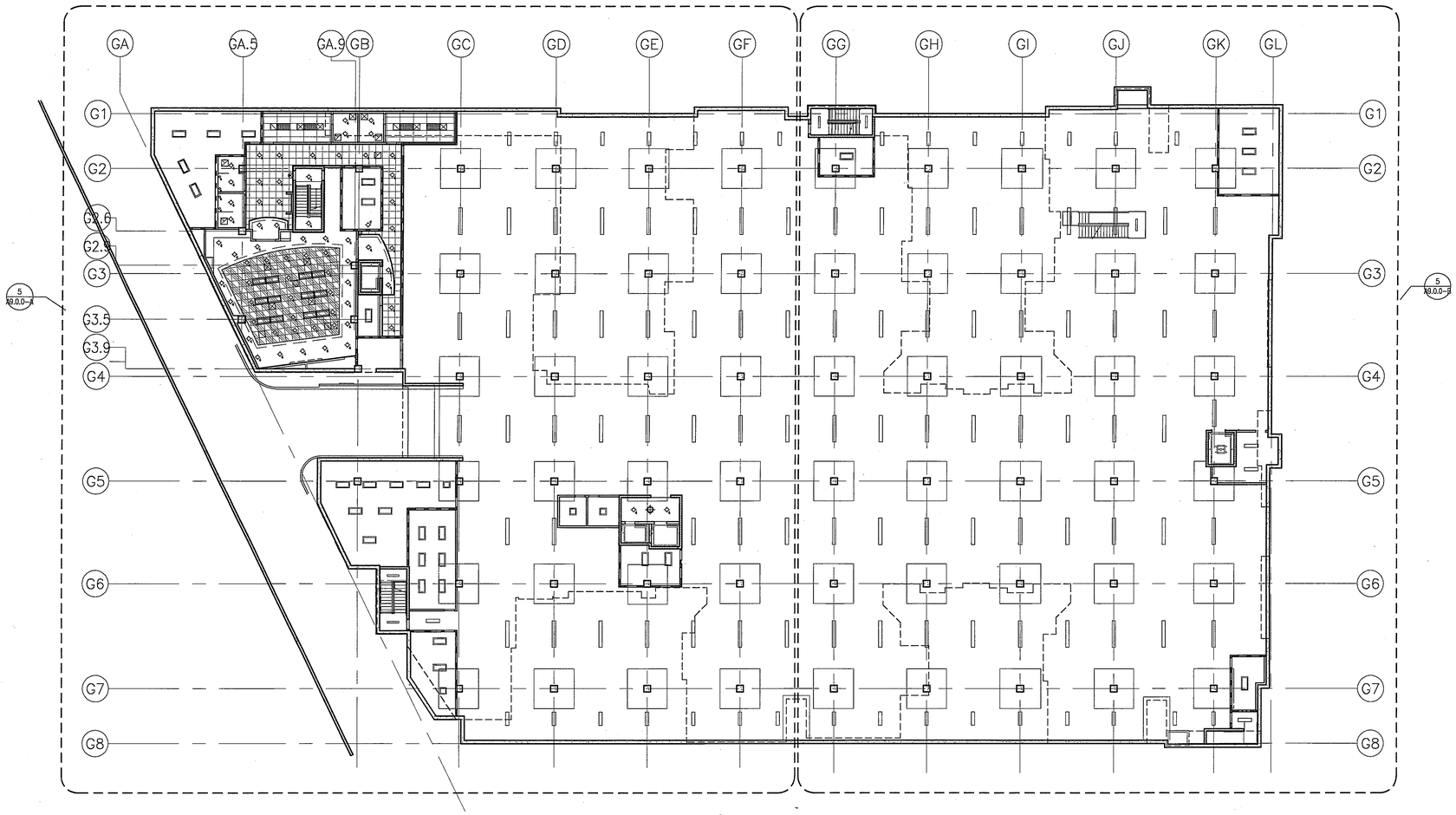

1. SEE ENLARGED REFLECTED CEILING PLANS A9.X.0–A AND A9.X.0–B FOR CEILING INFORMATION.

0 2' 4' 8' 16'

GROUND FLOOR PLAN (NORTH) — Scale 1/16" = 1'-0" — 5

GENERAL NOTES — Scale N.T.S. — 1

WWCOT
Widom Wein Cohen O'Leary Terasawa

3130 Wilshire Boulevard
Sixth Floor
Santa Monica, California 90403
T (310) 828-0040
F (310) 453-9432
www.wwcot.com

Inland Empire
Palm Springs
Moorpark
Shanghai, China

RECEIVED
10:08 am, Aug 14, 2008
FRAMEMAX

Building Department Submittal: June 1, 2007
Issued For Bid:
Issued For Construction:

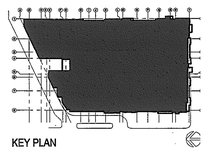

KEY PLAN

Project:
Jewish Home for The Aging

FOUNTAINVIEW AT EISENBERG VILLAGE

6440 Wilbur Ave
Reseda, CA. 91335

JEWISH HOME

JEWISH HOME FOR THE AGING
18855 Victory Blvd.
Reseda, CA 91335
Project Number: 04206.00

Basement Reflected Ceiling Floor Plan

Date: 04/05/2007
Drawn By:
Checked By:

A9.0.0
Sheet No.

File Path & Name: F:\PROJECTS\04206-00\A-CD\SHEETS\A9.0.0.DWG
© WWCOT 2006 May 28, 2007 - 03:53 pm

RECEIVED BY SUFFOLK ON 06/01/07

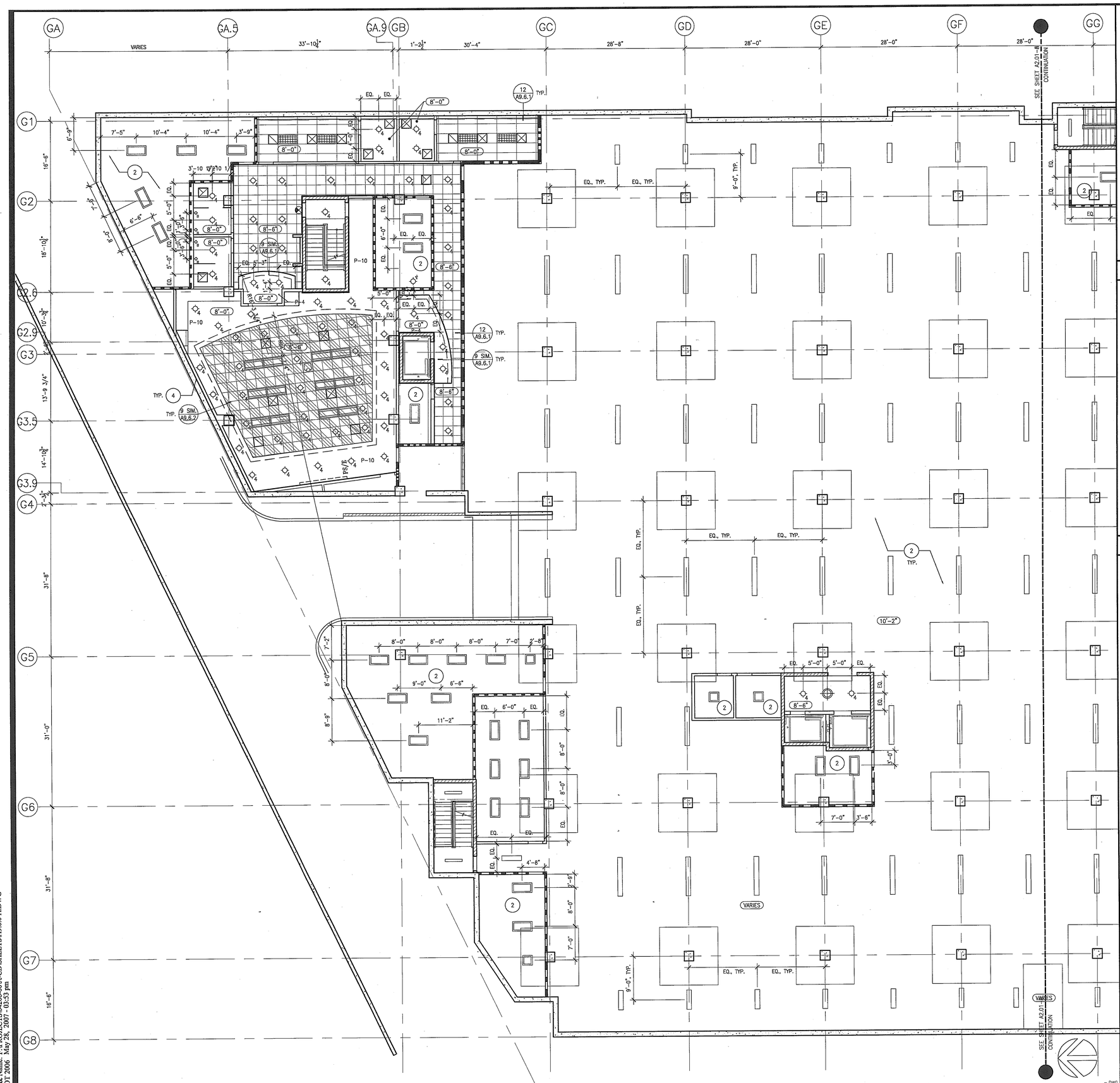

GROUND FLOOR PLAN (NORTH) — Scale 1/8" = 1'-0" — 5

1. SEE UNIT PLANS A9.5.1 THROUGH A9.5.6 FOR UNIT CEILINGS.
2. SEE SHEETS A9.6.– SERIES DRAWINGS FOR TYPICAL INTERIOR AND EXTERIOR CEILING DETAILS.
3. SEE SHEETS A12– SERIES DRAWINGS FOR INTERIOR FINISHES.
4. FIXTURES ARE CENTERED IN PANELS OR ROOM, U.N.O.
5. GYP. BD. SOFFITS TO ALIGN W/ FACE OF WALL FINISH, TYP.
6. SEE SHEETS A.9.2.0, A9.2.0–A, AND A9.2.0–B FOR TYPICAL DIMENSIONS AND NOTES FOR 3RD AND 4TH FLOORS.
7. WALL MOUNTED FIXTURES TO BE MOUNTED @ 6'–0" A.F.F. U.N.O., SEE ALSO EXTERIOR AND INTERIOR ELEVATIONS
8. SEE ELECTRICAL DRAWINGS FOR FIXTURE DESIGNATION AND ADDITIONAL INFORMATION.
9. GROUP SERVICE POINTS TO MINIMIZE REQUIRED ACCESS LOCATIONS AND LOCATE ABOVE ADJACENT ACCESSIBLE CEILINGS WHERE POSSIBLE. COORDINATE WORK OF INSTALLERS AND TRADES AS REQUIRED TO ENSURE ACCESS TO SERVICE POINTS.
10. PROVIDE ADDITIONAL ACCESS PANELS AS REQUIRED WHERE VALVE CUT–OFFS, TRANSFORMERS OR OTHER EQUIPMENT/SERVICE OCCURS ABOVE HARD CEILINGS. MATCH ADJACENT CEILING/SOFFIT FINISH. SUBMIT LAYOUT OF ADDITIONAL ACCESS PANELS FOR ARCHITECT'S REVIEW.
11. PROVIDE BLOCKING, FRAMING OR OTHER SUPPORT AS REQUIRED FOR FIXTURES AND EQUIPMENT WHICH CANNOT BE SUPPORTED BY GRID SYSTEM. COORDINATE MANUFACTURER'S TEMPLATES AND INSTRUCTIONS AS REQUIRED.
12. COORDINATE ACCESS TO IN–LINE SMOKE DETECTORS TO BE ABOVE ACCESSIBLE CEILING.
13. PROVIDE TRANSFORMERS, ACCESSORIES, ETC., FOR LOW–VOLTAGE LIGHTING, AS REQUIRED FOR COMPLETE INSTALLATION.
14. OPEN AREAS INDICATED WITH PAINT NUMBER TO RECEIVE PAINT AT SURFACE ONLY. PROTECT M/E/P SYSTEMS AND EQUIPMENT FROM OVER SPRAY.
15. SEE THEATRICAL DRAWINGS FOR STAGE LIGHTING AND RIGGING INFORMATION.

CP_legend.dwg

GENERAL NOTES — Scale NA — 4

1. GYPSUM BOARD POCKET AT EXTERIOR WINDOW HEAD FOR TREATMENT/DRAPERY. SEE 1/A9.6.2.
2. EXPOSED.
3. LIGHTING AT SHELF BELOW, SEE INTERIOR ELEVATIONS.
4. STEP LIGHT, SEE INTERIOR ELEVATIONS.
5. LINEAR MECHANICAL DIFFUSER, SEE MECHANICAL DRAWINGS.
6. ALIGN.
7. HEAT LAMP, TYPICAL EACH UNIT RESTROOM.
8. LINE OF COUNTER/CABINETRY BELOW.
9. LINE OF CABINETRY ABOVE.
10. PATH OF DRYER VENT ABOVE.
11. GYPSUM BOARD SOFFIT, PAINTED PER FINISH SCHEDULE.
12. ACCESS PANEL FOR FAN COIL UNIT. COORDINATE SIZE WITH MECHANICAL DRAWINGS.
13. TWO–HOUR RATED FLOOR/CEILING ASSEMBLY G551 AS FINISHED CEILING, PAINTED PER FINISH SCHEDULE.

CP_legend.dwg

KEYNOTES — Scale NA — 3

- 2' X 2' SUSPENDED ACOUSTICAL CEILING TILE – WOOD CEILING PANELS ACT1
- 2' X 4' SUSPENDED ACOUSTICAL CEILING TILE ACT2
- 2' X 2' SUSPENDED ACOUSTICAL CEILING TILE ACT3
- 4' X 4' SUSPENDED ACOUSTICAL CEILING TILE ACT4
- 2' X 2' SUSPENDED ACOUSTICAL CEILING TILE – TRANSLUCENT PANEL ACT5
- 2' X 6' SUSPENDED ACOUSTICAL CEILING TILE ACT6
- 2' X 2' SUSPENDED ACOUSTICAL CEILING TILE ACT7
- 2' X 4' SUSPENDED ACOUSTICAL CEILING TILE ACT8
- 2' X 2' SUSPENDED ACOUSTICAL CEILING TILE – THEATER ACT9

- 4" RECESSED CFL DOWNLIGHT
- 6" RECESSED CFL DOWNLIGHT
- 6" RECESSED CFL DOWNLIGHT (WET LOCATION)
- SURFACE MOUNTED CLOSET FIXTURE
- RECSSSED HEAT LAMP
- 6" RECESSED CFL DOWNLIGHT (EXTERIOR)
- PROVIDE CEILING MOUNTED JACK ONLY
- SURFACE MOUNTED, CFL WALL SCONCE–UNIT
- EXTERIOR SURFACE MOUNTED, CFL WALL SCONCE–UNIT BALCONY
- SURFACE MOUNTED, CFL WALL SCONCE–CORRIDOR
- SURFACE MOUNTED, CFL WALL SCONCE PUBLIC BATHROOM
- EXTERIOR SURFACE MOUNTED, CFL WALL SCONCE OR STEP LIGHT
- EXTERIOR RECESSED FIXTURE W/ DROPPED LENS
- 6" RECESSED WALLWASH
- RECESSED 2'X2' DEEP CELL FIXTURE
- RECESSED 2'X4' DEEP CELL FIXTURE
- RECESSED 2'X2' DIRECT/INDIRECT FLOURESCENT FIXTURE
- RECESSED 2'X4' DIRECT/INDIRECT FLUORESCENT FIXTURE
- SURFACE MOUNTED 2'X2' FLUORESCENT FIXTURE
- SURFACE MOUNTED 2'X4' FLUORESCENT FIXTURE
- STAGGERED FLOURESCENT COVE STRIP
- FLUORESCENT STRIP LIGHT (TYP. CROSS AX @ CORRIDOR)
- UNDER–CABINET TASK LIGHT
- VANITY FIXTURE (MOUNTED VERTICALLY ON EACH SIDE OF MIRROR)
- PENDANT FIXTURE (DECORATIVE)
- PENDANT (SURFACE/SUSPENDED) FIXTURE
- CUSTOM SIZE PENDANT– 36 DIA (SURFACE/SUSPENDED) FIXTURE IN 1ST FL FOYER
- ACCESS PANELS, LOCATE AS REQUIRED. COORDINATE WITH PLUMBING
- HARDWIRED SMOKE DETECTOR WITH BATTERY BACKUP
- SUPPLY AIR DIFFUSER, SEE MECHANICAL
- RETURN AIR DIFFUSER, SEE MECHANICAL
- EXHAUST FAN DIFFUSER, SEE MECHANICAL
- CEILING MOUNTED EXIT SIGN
- WALL MOUNTED EXIT SIGN

CP_legend.dwg

CEILING FINISH AND FIXTURE LEGEND — Scale NA — 1

WWCOT
Widom Wein Cohen O'Leary Terasawa

3130 Wilshire Boulevard
Sixth Floor
Santa Monica, California 90403
T (310) 828-0040
F (310) 453-9432
www.wwcot.com

Inland Empire
Palm Springs
Moorpark
Shanghai, China

RECEIVED
10:08 am, Aug 14, 2008
FRAMEMAX

Building Department Submittal: June 1, 2007
Issued For Bid: ———
Issued For Construction: ———

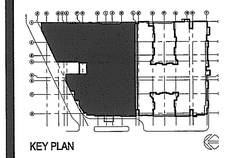

KEY PLAN

Project:
Jewish Home for The Aging
FOUNTAINVIEW AT EISENBERG VILLAGE
6440 Wilbur Ave
Reseda, CA. 91335

BPB JEWISH HOME
JEWISH HOME FOR THE AGING
18855 Victory Blvd.
Reseda, CA 91335
Project Number: 04206.00

BASEMENT REFLEC CEILING FLOOR PLAN (NORTH)

Date: 04/05/2007
Drawn By: ———
Checked By: ———

A9.0.0-A
Sheet No.

File Path & Name: F:\PROJECTS\04206-00\A-CD\SHEETS\A9.0.0-A.DWG
© WWCOT 2006 May 28, 2007 - 03:53 pm

RECEIVED BY SUFFOLK ON 06/01/07

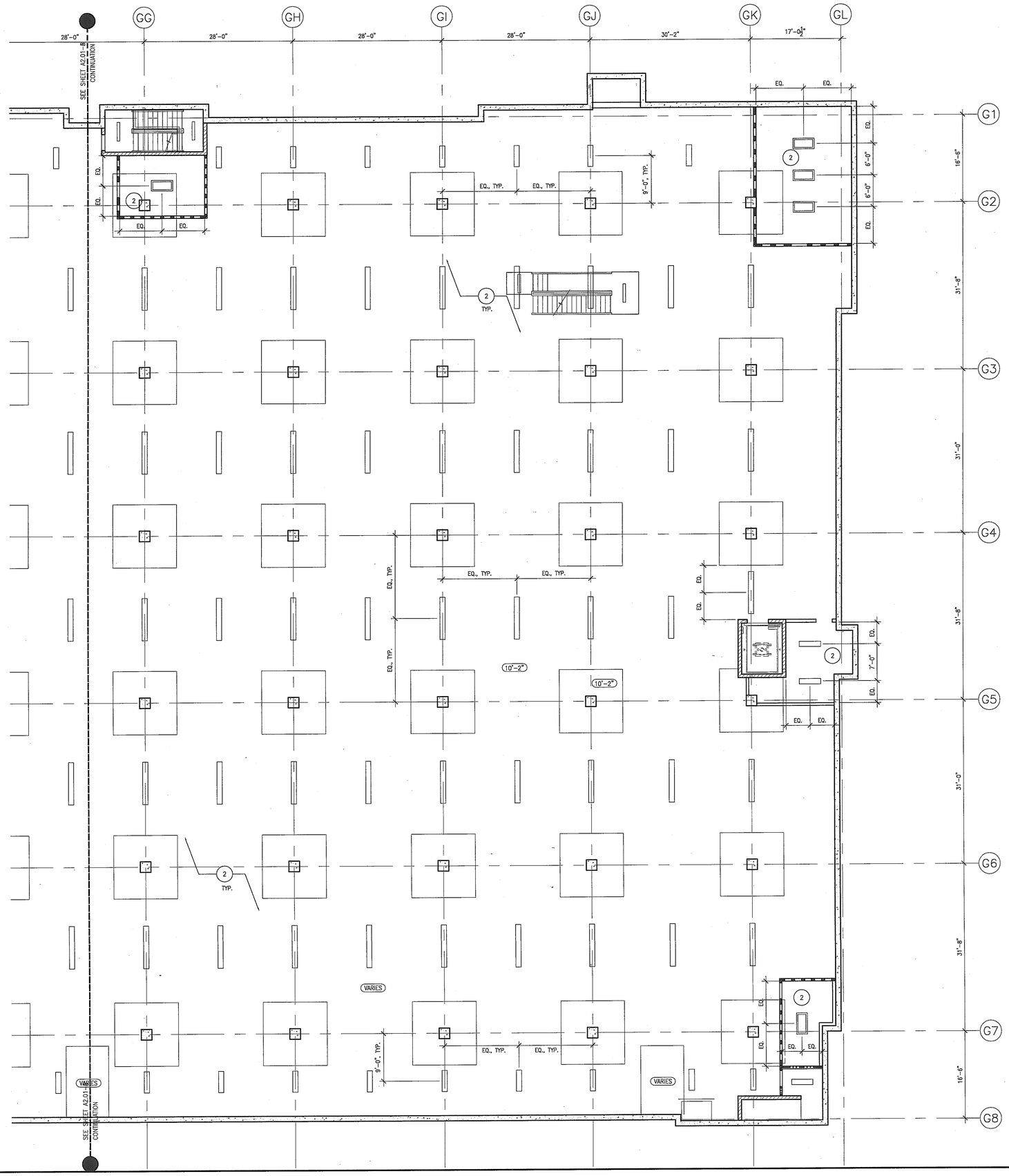

GROUND FLOOR PLAN (SOUTH)

Scale 1/8" = 1'-0" 5

1. SEE UNIT PLANS A9.5.1 THROUGH A9.5.6 FOR UNIT CEILINGS.
2. SEE SHEETS A9.6.– SERIES DRAWINGS FOR TYPICAL INTERIOR AND EXTERIOR CEILING DETAILS.
3. SEE SHEETS A12– SERIES DRAWINGS FOR INTERIOR FINISHES.
4. FIXTURES ARE CENTERED IN PANELS OR ROOM, U.N.O.
5. GYP. BD. SOFFITS TO ALIGN W/ FACE OF WALL FINISH, TYP.
6. SEE SHEETS A.9.2.0, A9.2.0–A, AND A9.2.0–B FOR TYPICAL DIMENSIONS AND NOTES FOR 3RD AND 4TH FLOORS.
7. WALL MOUNTED FIXTURES TO BE MOUNTED @ 6'–0" A.F.F. U.N.O., SEE ALSO EXTERIOR AND INTERIOR ELEVATIONS
8. SEE ELECTRICAL DRAWINGS FOR FIXTURE DESIGNATION AND ADDITIONAL INFORMATION.
9. GROUP SERVICE POINTS TO MINIMIZE REQUIRED ACCESS LOCATIONS AND LOCATE ABOVE ADJACENT ACCESSIBLE CEILINGS WHERE POSSIBLE. COORDINATE WORK OF INSTALLERS AND TRADES AS REQUIRED TO ENSURE ACCESS TO SERVICE POINTS.
10. PROVIDE ADDITIONAL ACCESS PANELS AS REQUIRED WHERE VALVE CUT–OFFS, TRANSFORMERS OR OTHER EQUIPMENT/SERVICE OCCURS ABOVE HARD CEILINGS. MATCH ADJACENT CEILING/SOFFIT FINISH. SUBMIT LAYOUT OF ADDITIONAL ACCESS PANELS FOR ARCHITECT'S REVIEW.
11. PROVIDE BLOCKING, FRAMING OR OTHER SUPPORT AS REQUIRED FOR FIXTURES AND EQUIPMENT WHICH CANNOT BE SUPPORTED BY GRID SYSTEM. COORDINATE MANUFACTURER'S TEMPLATES AND INSTRUCTIONS AS REQUIRED.
12. COORDINATE ACCESS TO IN–LINE SMOKE DETECTORS TO BE ABOVE ACCESSIBLE CEILING.
13. PROVIDE TRANSFORMERS, ACCESSORIES, ETC., FOR LOW–VOLTAGE LIGHTING, AS REQUIRED FOR COMPLETE INSTALLATION.
14. OPEN AREAS INDICATED WITH PAINT NUMBER TO RECEIVE PAINT AT SURFACE ONLY. PROTECT M/E/P SYSTEMS AND EQUIPMENT FROM OVER SPRAY.
15. SEE THEATRICAL DRAWINGS FOR STAGE LIGHTING AND RIGGING INFORMATION.

CP_legend.dwg

GENERAL NOTES

Scale NA 4

1. GYPSUM BOARD POCKET AT EXTERIOR WINDOW HEAD FOR TREATMENT/DRAPERY. SEE 1/A9.6.2.
2. EXPOSED.
3. LIGHTING AT SHELF BELOW, SEE INTERIOR ELEVATIONS.
4. STEP LIGHT, SEE INTERIOR ELEVATIONS.
5. LINEAR MECHANICAL DIFFUSER, SEE MECHANICAL DRAWINGS.
6. ALIGN.
7. HEAT LAMP, TYPICAL EACH UNIT RESTROOM.
8. LINE OF COUNTER/CABINETRY BELOW.
9. LINE OF CABINETRY ABOVE.
10. PATH OF DRYER VENT ABOVE.
11. GYPSUM BOARD SOFFIT, PAINTED PER FINISH SCHEDULE.
12. ACCESS PANEL FOR FAN COIL UNIT. COORDINATE SIZE WITH MECHANICAL DRAWINGS.
13. TWO–HOUR RATED FLOOR/CEILING ASSEMBLY G551 AS FINISHED CEILING, PAINTED PER FINISH SCHEDULE.

CP_legend.dwg

KEYNOTES

Scale NA 3

- 2' X 2' SUSPENDED ACOUSTICAL CEILING TILE – WOOD CEILING PANELS ACT1
- 2' X 4' SUSPENDED ACOUSTICAL CEILING TILE ACT2
- 2' X 2' SUSPENDED ACOUSTICAL CEILING TILE ACT3
- 4' X 4' SUSPENDED ACOUSTICAL CEILING TILE ACT4
- 2' X 2' SUSPENDED ACOUSTICAL CEILING TILE – TRANSLUCENT PANEL ACT5
- 2' X 6' SUSPENDED ACOUSTICAL CEILING TILE ACT6
- 2' X 2' SUSPENDED ACOUSTICAL CEILING TILE ACT7
- 2' X 4' SUSPENDED ACOUSTICAL CEILING TILE ACT8
- 2' X 2' SUSPENDED ACOUSTICAL CEILING TILE – THEATER ACT9

- 4" RECESSED CFL DOWNLIGHT
- 6" RECESSED CFL DOWNLIGHT
- 6" RECESSED CFL DOWNLIGHT (WET LOCATION)
- SURFACE MOUNTED CLOSET FIXTURE
- RECSSSED HEAT LAMP
- 6" RECESSED CFL DOWNLIGHT (EXTERIOR)
- PROVIDE CEILING MOUNTED JACK ONLY
- SURFACE MOUNTED, CFL WALL SCONCE–UNIT
- EXTERIOR SURFACE MOUNTED, CFL WALL SCONCE–UNIT BALCONY
- SURFACE MOUNTED, CFL WALL SCONCE–CORRIDOR
- SURFACE MOUNTED, CFL WALL SCONCE PUBLIC BATHROOM
- EXTERIOR SURFACE MOUNTED, CFL WALL SCONCE OR STEP LIGHT
- EXTERIOR RECESSED FIXTURE W/ DROPPED LENS
- 6" RECESSED WALLWASH
- RECESSED 2'X2' DEEP CELL FIXTURE
- RECESSED 2'X4' DEEP CELL FIXTURE
- RECESSED 2'X2' DIRECT/INDIRECT FLOURESCENT FIXTURE
- RECESSED 2'X4' DIRECT/INDIRECT FLUORESCENT FIXTURE
- SURFACE MOUNTED 2'X2' FLUORESCENT FIXTURE
- SURFACE MOUNTED 2'X4' FLUORESCENT FIXTURE
- STAGGERED FLOURESCENT COVE STRIP
- FLUORESCENT STRIP LIGHT (TYP. CROSS AX @ CORRIDOR)
- UNDER–CABINET TASK LIGHT
- VANITY FIXTURE (MOUNTED VERTICALLY ON EACH SIDE OF MIRROR)
- PENDANT FIXTURE (DECORATIVE)
- PENDANT (SURFACE/SUSPENDED) FIXTURE
- CUSTOM SIZE PENDANT– 36 DIA (SURFACE/SUSPENDED) FIXTURE IN 1ST FL FOYER
- ACCESS PANELS, LOCATE AS REQUIRED. COORDINATE WITH PLUMBING
- HARDWIRED SMOKE DETECTOR WITH BATTERY BACKUP
- SUPPLY AIR DIFFUSER, SEE MECHANICAL
- RETURN AIR DIFFUSER, SEE MECHANICAL
- EXHAUST FAN DIFFUSER, SEE MECHANICAL
- CEILING MOUNTED EXIT SIGN
- WALL MOUNTED EXIT SIGN

CP_legend.dwg

CEILING FINISH AND FIXTURE LEGEND

Scale NA 1

WWC OT
Widom Wein Cohen O'Leary Terasawa

3130 Wilshire Boulevard
Sixth Floor
Santa Monica, California 90403
T (310) 828-0040
F (310) 453-9432
www.wwcot.com

Inland Empire
Palm Springs
Moorpark
Shanghai, China

RECEIVED
10:08 am, Aug 14, 2008
FRAMEMAX

Building Department Submittal: June 1, 2007
Issued For Bid: _____
Issued For Construction: _____

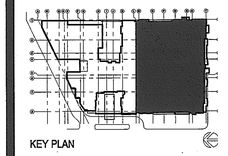

KEY PLAN

Project:
Jewish Home for The Aging
FOUNTAINVIEW AT EISENBERG VILLAGE
6440 Wilbur Ave
Reseda, CA. 91335

JEWISH HOME
JEWISH HOME FOR THE AGING
18855 Victory Blvd.
Reseda, CA 91335
Project Number: 04206.00

BASEMENT REFLEC CEILING FLOOR PLAN (SOUTH)

Date: 04/05/2007
Drawn By: _____
Checked By: _____

A9.0.0-B
Sheet No.

File Path, & Name: F:\PROJECTS\04206-00\A-CD\SHEETS\A9.0.0-B.DWG
© WWCOT 2006 May 26, 2007 - 03:54 pm

RECEIVED BY SUFFOLK ON 06/01/07

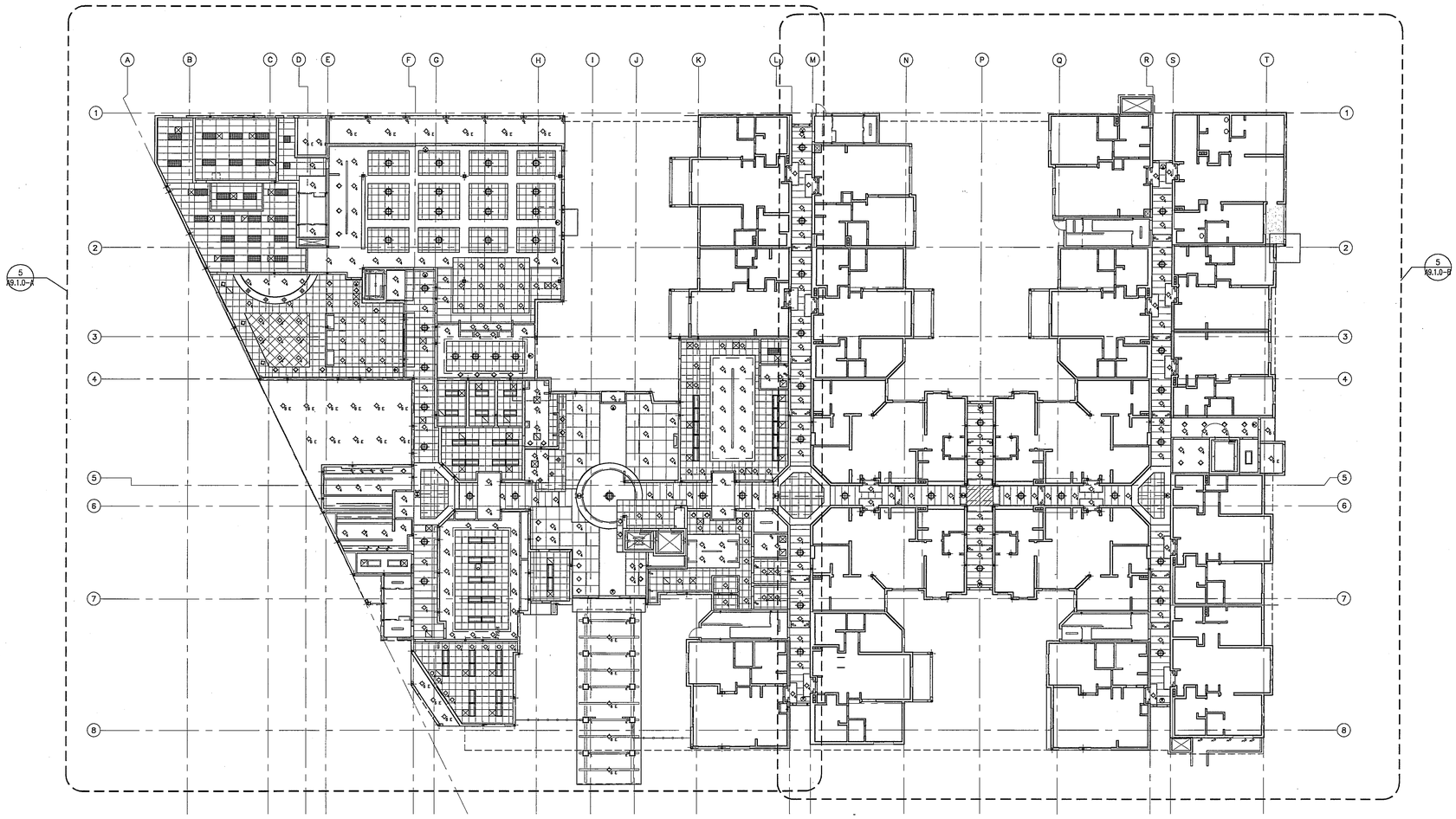

1. SEE ENLARGED REFLECTED CEILING PLANS A9.X.0-A AND A9.X.0-B FOR CEILING INFORMATION.

WWC OT
Widom Wein Cohen O'Leary Terasawa

3130 Wilshire Boulevard
Sixth Floor
Santa Monica, California 90403
T (310) 828-0040
F (310) 453-9432
www.wwcot.com

Inland Empire
Palm Springs
Moorpark
Shanghai, China

RECEIVED
10:08 am, Aug 14, 2008
FRAMEMAX

Building Department Submittal: June 1, 2007
Issued For Bid: ____
Issued For Construction: ____

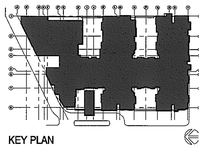

KEY PLAN

Project:
Jewish Home for The Aging
FOUNTAINVIEW AT EISENBERG VILLAGE
6440 Wilbur Ave
Reseda, CA. 91335

JEWISH HOME FOR THE AGING
18855 Victory Blvd.
Reseda, CA 91335
Project Number: 04206.00

GROUND FLOOR REFLECTED CEILIN PLAN

Date: 04/05/2007
Drawn By: ____
Checked By: ____

A9.1.0
Sheet No.

File Path & Name: F:\PROJECTS\04206-00\A-CD\SHEETS\A9.1.0.DWG
Date & Time Plotted: May 25, 2007 - 03:54 pm
© WWCOT 2006

GROUND FLOOR REFLECTED CEILING PLAN

Scale 1/16" = 1'-0" 5

CP_legend-overall.dwg

GENERAL NOTES

Scale N.T.S. 1

RECEIVED BY SUFFOLK ON 06/01/07

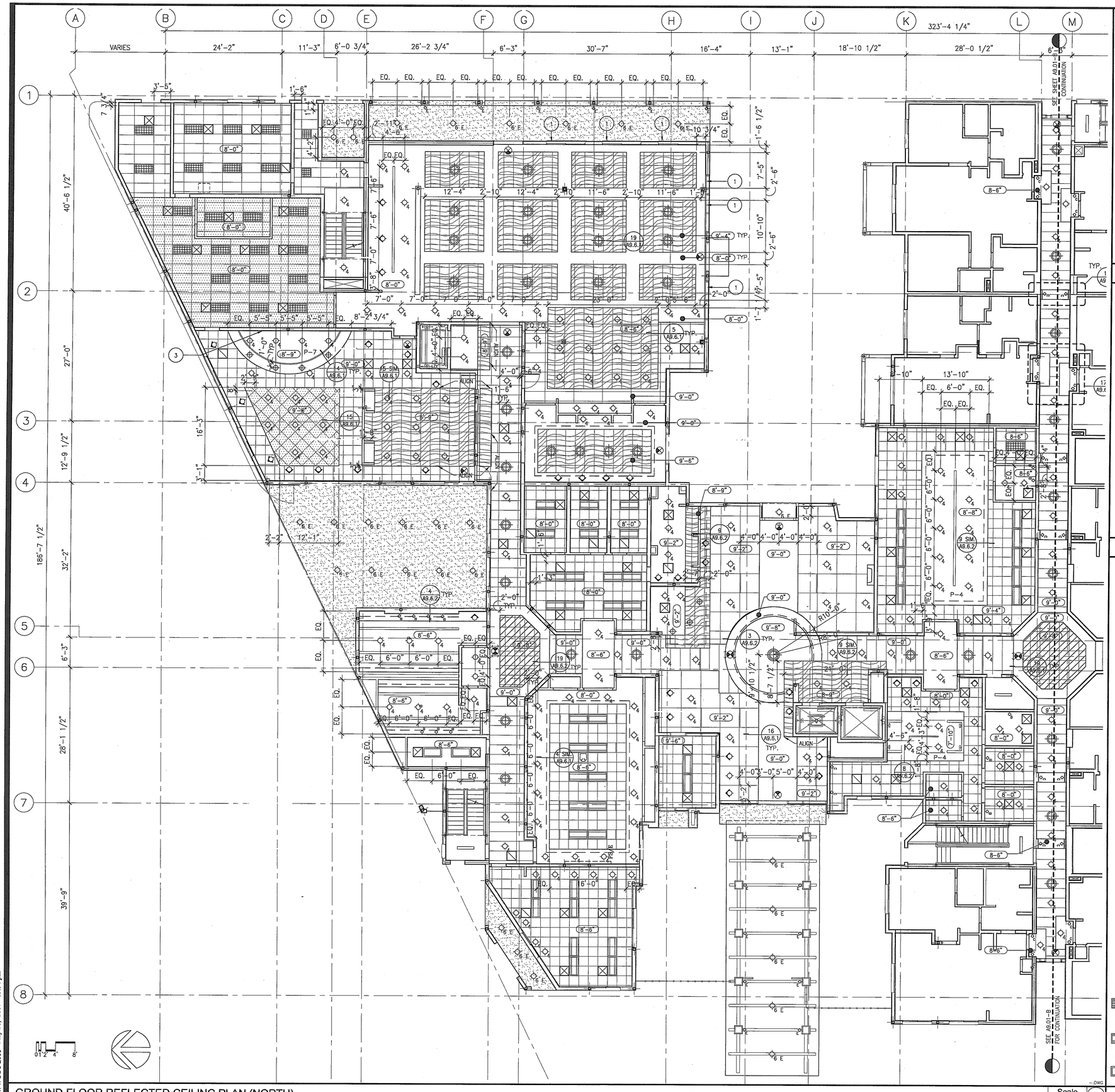

GENERAL NOTES

Scale NA — 4

1. SEE UNIT PLANS A9.5.1 THROUGH A9.5.6 FOR UNIT CEILINGS.
2. SEE SHEETS A9.6.– SERIES DRAWINGS FOR TYPICAL INTERIOR AND EXTERIOR CEILING DETAILS.
3. SEE SHEETS A12– SERIES DRAWINGS FOR INTERIOR FINISHES.
4. FIXTURES ARE CENTERED IN PANELS OR ROOM, U.N.O.
5. GYP. BD. SOFFITS TO ALIGN W/ FACE OF WALL FINISH, TYP.
6. SEE SHEETS A.9.2.0, A9.2.0–A, AND A9.2.0–B FOR TYPICAL DIMENSIONS AND NOTES FOR 3RD AND 4TH FLOORS.
7. WALL MOUNTED FIXTURES TO BE MOUNTED @ 6'–0" A.F.F. U.N.O., SEE ALSO EXTERIOR AND INTERIOR ELEVATIONS
8. SEE ELECTRICAL DRAWINGS FOR FIXTURE DESIGNATION AND ADDITIONAL INFORMATION.
9. GROUP SERVICE POINTS TO MINIMIZE REQUIRED ACCESS LOCATIONS AND LOCATE ABOVE ADJACENT ACCESSIBLE CEILINGS WHERE POSSIBLE. COORDINATE WORK OF INSTALLERS AND TRADES AS REQUIRED TO ENSURE ACCESS TO SERVICE POINTS.
10. PROVIDE ADDITIONAL ACCESS PANELS AS REQUIRED WHERE VALVE CUT–OFFS, TRANSFORMERS OR OTHER EQUIPMENT/SERVICE OCCURS ABOVE HARD CEILINGS. MATCH ADJACENT CEILING/SOFFIT FINISH. SUBMIT LAYOUT OF ADDITIONAL ACCESS PANELS FOR ARCHITECT'S REVIEW.
11. PROVIDE BLOCKING, FRAMING OR OTHER SUPPORT AS REQUIRED FOR FIXTURES AND EQUIPMENT WHICH CANNOT BE SUPPORTED BY GRID SYSTEM. COORDINATE MANUFACTURER'S TEMPLATES AND INSTRUCTIONS AS REQUIRED.
12. COORDINATE ACCESS TO IN–LINE SMOKE DETECTORS TO BE ABOVE ACCESSIBLE CEILING.
13. PROVIDE TRANSFORMERS, ACCESSORIES, ETC., FOR LOW–VOLTAGE LIGHTING, AS REQUIRED FOR COMPLETE INSTALLATION.
14. OPEN AREAS INDICATED WITH PAINT NUMBER TO RECEIVE PAINT AT SURFACE ONLY. PROTECT M/E/P SYSTEMS AND EQUIPMENT FROM OVER SPRAY.
15. SEE THEATRICAL DRAWINGS FOR STAGE LIGHTING AND RIGGING INFORMATION.

CP_legend.dwg

KEYNOTES

Scale NA — 3

1. GYPSUM BOARD POCKET AT EXTERIOR WINDOW HEAD FOR TREATMENT/DRAPERY. SEE 1/A9.6.2.
2. EXPOSED.
3. LIGHTING AT SHELF BELOW, SEE INTERIOR ELEVATIONS.
4. STEP LIGHT, SEE INTERIOR ELEVATIONS.
5. LINEAR MECHANICAL DIFFUSER, SEE MECHANICAL DRAWINGS.
6. ALIGN.
7. HEAT LAMP, TYPICAL EACH UNIT RESTROOM.
8. LINE OF COUNTER/CABINETRY BELOW.
9. LINE OF CABINETRY ABOVE.
10. PATH OF DRYER VENT ABOVE.
11. GYPSUM BOARD SOFFIT, PAINTED PER FINISH SCHEDULE.
12. ACCESS PANEL FOR FAN COIL UNIT. COORDINATE SIZE WITH MECHANICAL DRAWINGS.
13. TWO–HOUR RATED FLOOR/CEILING ASSEMBLY G551 AS FINISHED CEILING, PAINTED PER FINISH SCHEDULE.

CP_legend.dwg

CEILING FINISH AND FIXTURE LEGEND

Scale NA — 1

- 2' X 2' SUSPENDED ACOUSTICAL CEILING TILE – WOOD CEILING PANELS ACT1
- 2' X 4' SUSPENDED ACOUSTICAL CEILING TILE ACT2
- 2' X 2' SUSPENDED ACOUSTICAL CEILING TILE ACT3
- 4' X 4' SUSPENDED ACOUSTICAL CEILING TILE ACT4
- 2' X 2' SUSPENDED ACOUSTICAL CEILING TILE – TRANSLUCENT PANEL ACT5
- 2' X 6' SUSPENDED ACOUSTICAL CEILING TILE ACT6
- 2' X 2' SUSPENDED ACOUSTICAL CEILING TILE ACT7
- 2' X 4' SUSPENDED ACOUSTICAL CEILING TILE ACT8
- 2' X 2' SUSPENDED ACOUSTICAL CEILING TILE – THEATER ACT9
- 4" RECESSED CFL DOWNLIGHT
- 6" RECESSED CFL DOWNLIGHT
- 6" RECESSED CFL DOWNLIGHT (WET LOCATION)
- SURFACE MOUNTED CLOSET FIXTURE
- RECSSSED HEAT LAMP
- 6" RECESSED CFL DOWNLIGHT (EXTERIOR)
- PROVIDE CEILING MOUNTED JACK ONLY
- SURFACE MOUNTED, CFL WALL SCONCE–UNIT
- EXTERIOR SURFACE MOUNTED, CFL WALL SCONCE–UNIT BALCONY
- SURFACE MOUNTED, CFL WALL-SCONCE–CORRIDOR
- SURFACE MOUNTED, CFL WALL SCONCE PUBLIC BATHROOM
- EXTERIOR SURFACE MOUNTED, CFL WALL SCONCE OR STEP LIGHT
- EXTERIOR RECESSED FIXTURE W/ DROPPED LENS
- 6" RECESSED WALLWASH
- RECESSED 2'X2' DEEP CELL FIXTURE
- RECESSED 2'X4' DEEP CELL FIXTURE
- RECESSED 2'X2' DIRECT/INDIRECT FLOURESCENT FIXTURE
- RECESSED 2'X4' DIRECT/INDIRECT FLUORESCENT FIXTURE
- SURFACE MOUNTED 2'X2' FLUORESCENT FIXTURE
- SURFACE MOUNTED 2'X4' FLUORESCENT FIXTURE
- STAGGERED FLOURESCENT COVE STRIP
- FLUORESCENT STRIP LIGHT (TYP. CROSS AX @ CORRIDOR)
- UNDER–CABINET TASK LIGHT
- VANITY FIXTURE (MOUNTED VERTICALLY ON EACH SIDE OF MIRROR)
- PENDANT FIXTURE (DECORATIVE)
- PENDANT (SURFACE/SUSPENDED) FIXTURE
- CUSTOM SIZE PENDANT– 36 DIA (SURFACE/SUSPENDED) FIXTURE IN 1ST FL FOYER
- ACCESS PANELS, LOCATE AS REQUIRED, COORDINATE WITH PLUMBING
- HARDWIRED SMOKE DETECTOR WITH BATTERY BACKUP
- SUPPLY AIR DIFFUSER, SEE MECHANICAL
- RETURN AIR DIFFUSER, SEE MECHANICAL
- EXHAUST FAN DIFFUSER, SEE MECHANICAL
- CEILING MOUNTED EXIT SIGN
- WALL MOUNTED EXIT SIGN

CP_legend.dwg

GROUND FLOOR REFLECTED CEILING PLAN (NORTH)

Scale 1/8" = 1'-0" — 5

–.DWG

WWC OT
Widom Wein Cohen O'Leary Terasawa

3130 Wilshire Boulevard
Sixth Floor
Santa Monica, California 90403
T (310) 828-0040
F (310) 453-9432
www.wwcot.com

Inland Empire
Palm Springs
Moorpark
Shanghai, China

RECEIVED
10:08 am, Aug 14, 2008
FRAMEMAX

Building Department Submittal: June 1, 2007
Issued For Bid: ____
Issued For Construction: ____

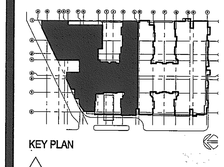

KEY PLAN

Project:
Jewish Home for The Aging
FOUNTAINVIEW AT EISENBERG VILLAGE
6440 Wilbur Ave
Reseda, CA. 91335

JEWISH HOME
JEWISH HOME FOR THE AGING
18855 Victory Blvd.
Reseda, CA 91335

Project Number: 04206.00

GROUND FLOOR REFLECTED CEILIN PLAN (NORTH)

Date: 04/05/2007
Drawn By: ____
Checked By: ____

A9.1.0-A
Sheet No.

File Path & Name: I:\PROJECTS\04206-00\A-CD\SHEETS\A9.1.0-A.DWG
© WWCOT 2006 May 28, 2007 - 03:54 pm

RECEIVED BY SUFFOLK ON 06/01/07

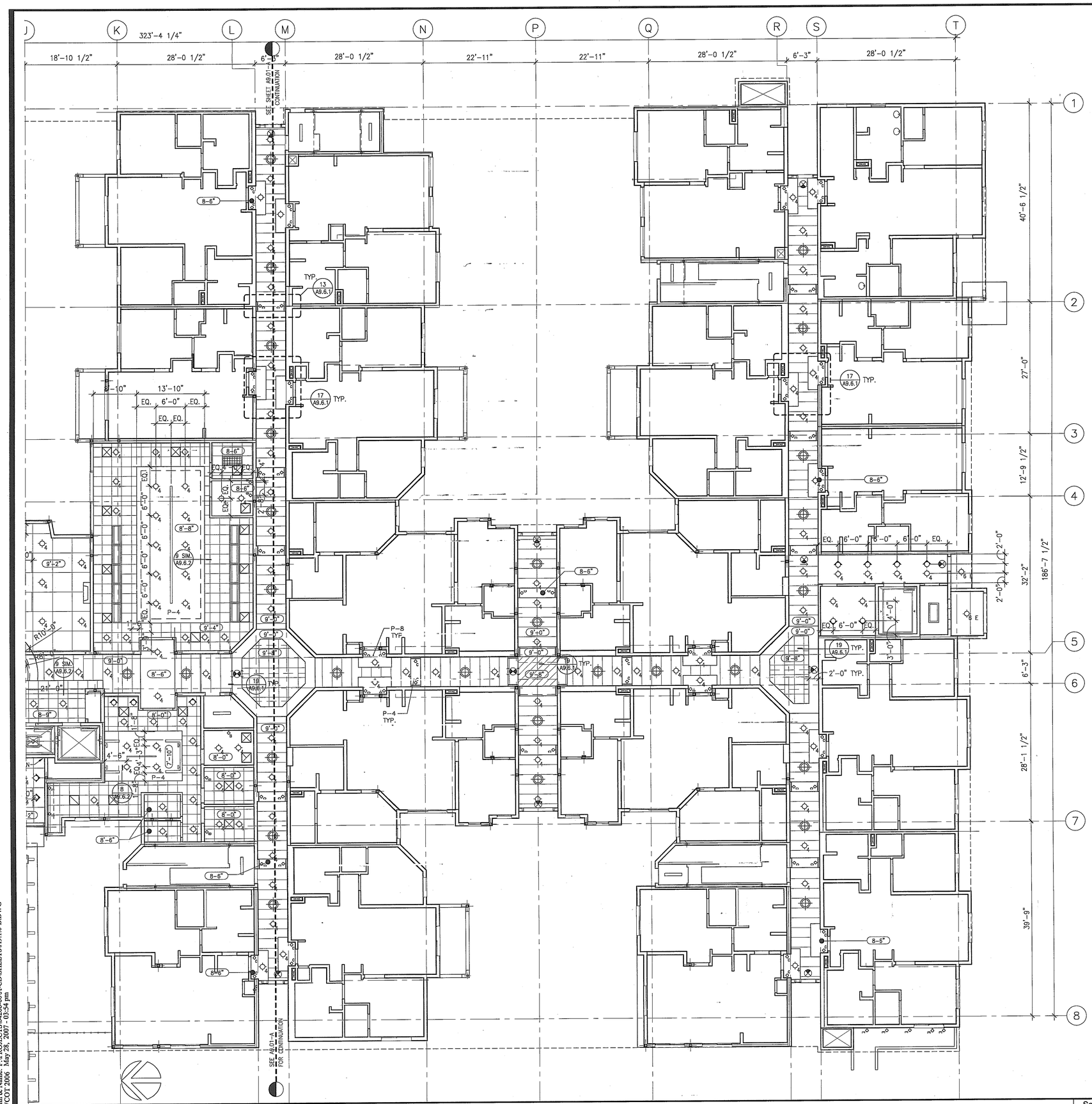

GROUND FLOOR REFLECTED CEILING PLAN (SOUTH)

Scale 1/8" = 1'-0" (5)

1. SEE UNIT PLANS A9.5.1 THROUGH A9.5.6 FOR UNIT CEILINGS.
2. SEE SHEETS A9.6.– SERIES DRAWINGS FOR TYPICAL INTERIOR AND EXTERIOR CEILING DETAILS.
3. SEE SHEETS A12– SERIES DRAWINGS FOR INTERIOR FINISHES.
4. FIXTURES ARE CENTERED IN PANELS OR ROOM, U.N.O.
5. GYP. BD. SOFFITS TO ALIGN W/ FACE OF WALL FINISH, TYP.
6. SEE SHEETS A.9.2.0, A9.2.0–A, AND A9.2.0–B FOR TYPICAL DIMENSIONS AND NOTES FOR 3RD AND 4TH FLOORS.
7. WALL MOUNTED FIXTURES TO BE MOUNTED @ 6'–0" A.F.F. U.N.O., SEE ALSO EXTERIOR AND INTERIOR ELEVATIONS
8. SEE ELECTRICAL DRAWINGS FOR FIXTURE DESIGNATION AND ADDITIONAL INFORMATION.
9. GROUP SERVICE POINTS TO MINIMIZE REQUIRED ACCESS LOCATIONS AND LOCATE ABOVE ADJACENT ACCESSIBLE CEILINGS WHERE POSSIBLE. COORDINATE WORK OF INSTALLERS AND TRADES AS REQUIRED TO ENSURE ACCESS TO SERVICE POINTS.
10. PROVIDE ADDITIONAL ACCESS PANELS AS REQUIRED WHERE VALVE CUT–OFFS, TRANSFORMERS OR OTHER EQUIPMENT/SERVICE OCCURS ABOVE HARD CEILINGS. MATCH ADJACENT CEILING/SOFFIT FINISH. SUBMIT LAYOUT OF ADDITIONAL ACCESS PANELS FOR ARCHITECT'S REVIEW.
11. PROVIDE BLOCKING, FRAMING OR OTHER SUPPORT AS REQUIRED FOR FIXTURES AND EQUIPMENT WHICH CANNOT BE SUPPORTED BY GRID SYSTEM. COORDINATE MANUFACTURER'S TEMPLATES AND INSTRUCTIONS AS REQUIRED.
12. COORDINATE ACCESS TO IN–LINE SMOKE DETECTORS TO BE ABOVE ACCESSIBLE CEILING.
13. PROVIDE TRANSFORMERS, ACCESSORIES, ETC., FOR LOW–VOLTAGE LIGHTING, AS REQUIRED FOR COMPLETE INSTALLATION.
14. OPEN AREAS INDICATED WITH PAINT NUMBER TO RECEIVE PAINT AT SURFACE ONLY. PROTECT M/E/P SYSTEMS AND EQUIPMENT FROM OVER SPRAY.
15. SEE THEATRICAL DRAWINGS FOR STAGE LIGHTING AND RIGGING INFORMATION.

CP_legend.dwg

GENERAL NOTES

Scale NA (4)

1. GYPSUM BOARD POCKET AT EXTERIOR WINDOW HEAD FOR TREATMENT/DRAPERY. SEE 1/A9.6.2.
2. EXPOSED.
3. LIGHTING AT SHELF BELOW, SEE INTERIOR ELEVATIONS.
4. STEP LIGHT, SEE INTERIOR ELEVATIONS.
5. LINEAR MECHANICAL DIFFUSER, SEE MECHANICAL DRAWINGS.
6. ALIGN.
7. HEAT LAMP, TYPICAL EACH UNIT RESTROOM.
8. LINE OF COUNTER/CABINETRY BELOW.
9. LINE OF CABINETRY ABOVE.
10. PATH OF DRYER VENT ABOVE.
11. GYPSUM BOARD SOFFIT, PAINTED PER FINISH SCHEDULE.
12. ACCESS PANEL FOR FAN COIL UNIT. COORDINATE SIZE WITH MECHANICAL DRAWINGS.
13. TWO–HOUR RATED FLOOR/CEILING ASSEMBLY G551 AS FINISHED CEILING, PAINTED PER FINISH SCHEDULE.

CP_legend.dwg

KEYNOTES

Scale NA (3)

- 2' X 2' SUSPENDED ACOUSTICAL CEILING TILE – WOOD CEILING PANELS ACT1
- 2' X 4' SUSPENDED ACOUSTICAL CEILING TILE ACT2
- 2' X 2' SUSPENDED ACOUSTICAL CEILING TILE ACT3
- 4' X 4' SUSPENDED ACOUSTICAL CEILING TILE ACT4
- 2' X 2' SUSPENDED ACOUSTICAL CEILING TILE – TRANSLUCENT PANEL ACT5
- 2' X 6' SUSPENDED ADOUSTICAL CEILING TILE ACT6
- 2' X 2' SUSPENDED ACOUSTICAL CEILING TILE ACT7
- 2' X 4' SUSPENDED ACOUSTICAL CEILING TILE ACT8
- 2' X 2' SUSPENDED ACOUSTICAL CEILING TILE – THEATER ACT9

- 4" RECESSED CFL DOWNLIGHT
- 6" RECESSED CFL DOWNLIGHT
- 6" RECESSED CFL DOWNLIGHT (WET LOCATION)
- SURFACE MOUNTED CLOSET FIXTURE
- RECSSSED HEAT LAMP
- 6" RECESSED CFL DOWNLIGHT (EXTERIOR)
- PROVIDE CEILING MOUNTED JACK ONLY
- SURFACE MOUNTED, CFL WALL SCONCE–UNIT
- EXTERIOR SURFACE MOUNTED, CFL WALL SCONCE–UNIT BALCONY
- SURFACE MOUNTED, CFL WALL SCONCE–CORRIDOR
- SURFACE MOUNTED, CFL WALL SCONCE PUBLIC BATHROOM
- EXTERIOR SURFACE MOUNTED, CFL WALL SCONCE OR STEP LIGHT
- EXTERIOR RECESSED FIXTURE W/ DROPPED LENS
- 6" RECESSED WALLWASH
- RECESSED 2'X2' DEEP CELL FIXTURE
- RECESSED 2'X4' DEEP CELL FIXTURE
- RECESSED 2'X2' DIRECT/INDIRECT FLOURESCENT FIXTURE
- RECESSED 2'X4' DIRECT/INDIRECT FLUORESCENT FIXTURE
- SURFACE MOUNTED 2'X2' FLUORESCENT FIXTURE
- SURFACE MOUNTED 2'X4' FLUORESCENT FIXTURE
- STAGGERED FLOURESCENT COVE STRIP
- FLUORESCENT STRIP LIGHT (TYP. CROSS AX @ CORRIDOR)
- UNDER–CABINET TASK LIGHT
- VANITY FIXTURE (MOUNTED VERTICALLY ON EACH SIDE OF MIRROR)
- PENDANT FIXTURE (DECORATIVE)
- PENDANT (SURFACE/SUSPENDED) FIXTURE
- CUSTOM SIZE PENDANT– 36 DIA (SURFACE/SUSPENDED) FIXTURE IN 1ST FL FOYER
- ACCESS PANELS, LOCATE AS REQUIRED. COORDINATE WITH PLUMBING
- HARDWIRED SMOKE DETECTOR WITH BATTERY BACKUP
- SUPPLY AIR DIFFUSER, SEE MECHANICAL
- RETURN AIR DIFFUSER, SEE MECHANICAL
- EXHAUST FAN DIFFUSER, SEE MECHANICAL
- CEILING MOUNTED EXIT SIGN
- WALL MOUNTED EXIT SIGN

CP_legend.dwg

CEILING FINISH AND FIXTURE LEGEND — Scale NA (1)

WWC OT
Widom Wein Cohen O'Leary Terasawa
3130 Wilshire Boulevard
Sixth Floor
Santa Monica, California 90403
T (310) 828-0040
F (310) 453-9432
www.wwcot.com
Inland Empire
Palm Springs
Moorpark
Shanghai, China

RECEIVED
10:08 am, Aug 14, 2008
FRAMEMAX

Building Department Submittal: June 1, 2007
Issued For Bid:
Issued For Construction:

KEY PLAN

Project:
Jewish Home for The Aging
FOUNTAINVIEW AT EISENBERG VILLAGE
6440 Wilbur Ave
Reseda, CA. 91335

JEWISH HOME FOR THE AGING
18855 Victory Blvd.
Reseda, CA 91335
Project Number: 04206.00

GROUND FLOOR REFLECTED CEILIN PLAN (SOUTH)

Date: 04/05/2007
Drawn By:
Checked By:

A9.1.0-B
Sheet No.

File Path & Name: F:\PROJECTS\04206-00\A-CD\SHEETS\A9.1.0-B.DWG
© WWCOT 2006 May 28, 2007 - 03:54 pm

RECEIVED BY SUFFOLK ON 06/01/07

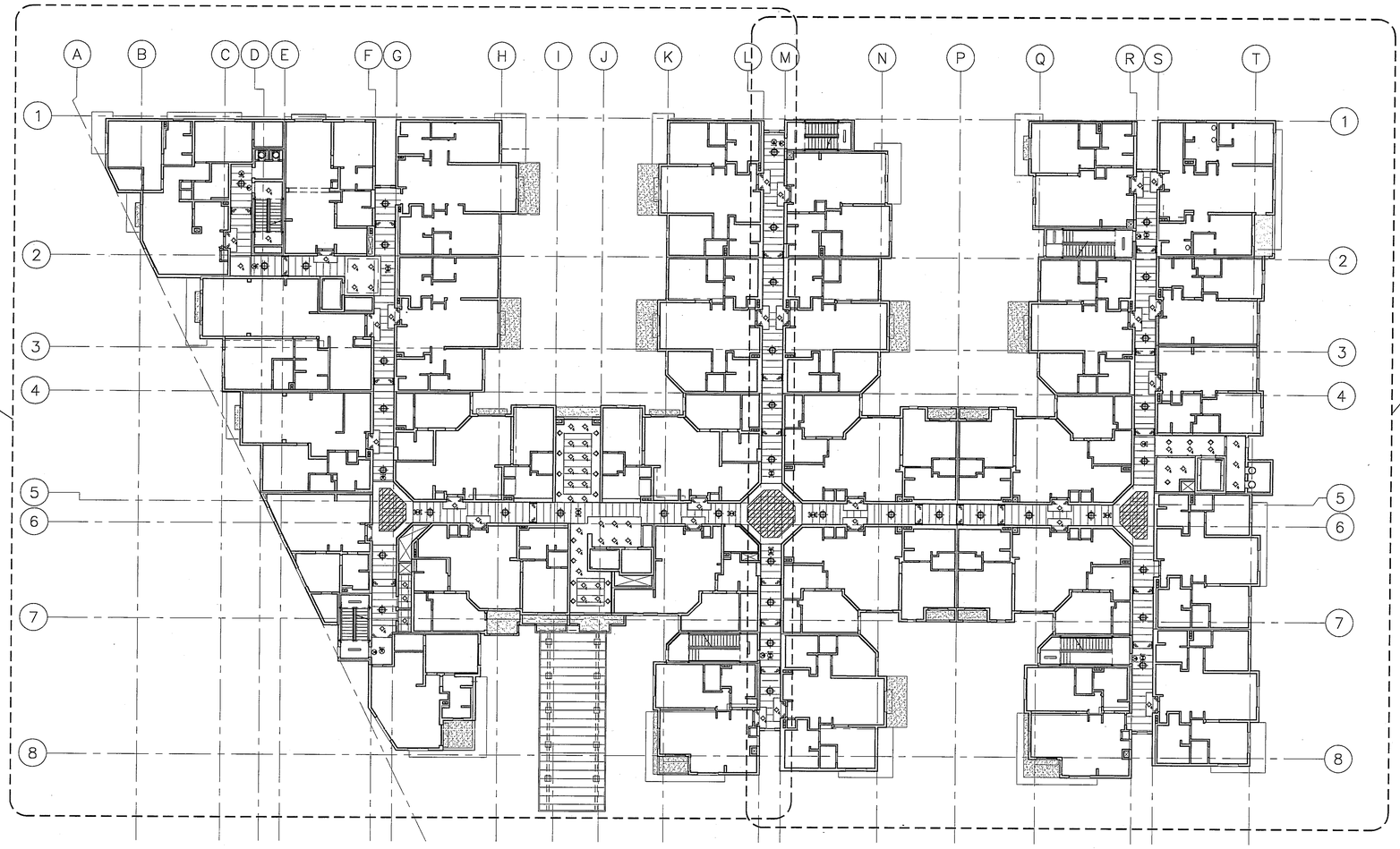

SECOND FLOOR REFLECTED CEILING PLAN (THIRD AND FOURTH FLOORS SIM.)

Scale 1/16" = 1'-0" | 5

1. SEE ENLARGED REFLECTED CEILING PLANS A9.X.0-A AND A9.X.0-B FOR CEILING INFORMATION.

GENERAL NOTES

Scale N.T.S. | 1

WWC OT
Widom Wein Cohen O'Leary Terasawa

3130 Wilshire Boulevard
Sixth Floor
Santa Monica, California 90403
T (310) 828-0040
F (310) 453-9432
www.wwcot.com

Inland Empire
Palm Springs
Moorpark
Shanghai, China

RECEIVED
10:08 am, Aug 14, 2008
FRAMEMAX

Building Department Submittal: June 1, 2007
Issued For Bid:
Issued For Construction:

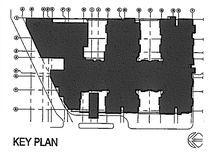

KEY PLAN

Project:
Jewish Home for The Aging
FOUNTAINVIEW AT RISENBERG VILLAGE
6440 Wilbur Ave
Reseda, CA. 91335

JEWISH HOME
JEWISH HOME FOR THE AGING
18855 Victory Blvd.
Reseda, CA 91335
Project Number: 04206.00

SECOND FLOOR REFLECTED CEILIN FLOOR PLAN

Date: 04/05/2007
Drawn By:
Checked By:

A9.2.0
Sheet No.

File Path & Name: F:\PROJECTS\04206-00\A-CD\SHEETS\A9.2.0.DWG
© WWCOT 2006 May 28, 2007 - 03:54 pm

RECEIVED BY SUFFOLK ON 06/01/07

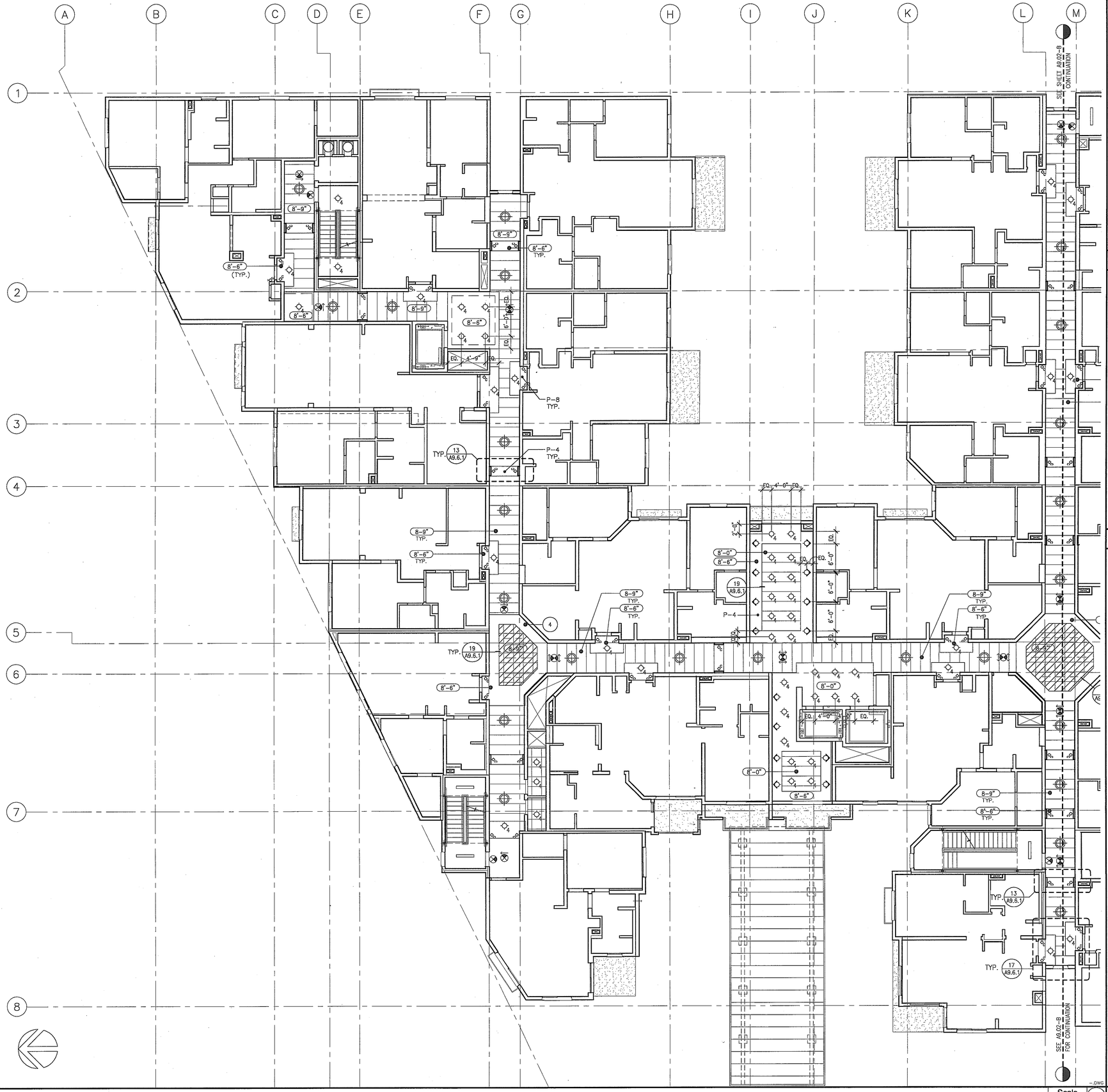

SECOND FLOOR REFLECTED CEILING PLAN - NORTH (THIRD AND FOURTH FLOORS SIM.)

Scale 1/8" = 1'-0" 5

1. SEE UNIT PLANS A9.5.1 THROUGH A9.5.6 FOR UNIT CEILINGS.
2. SEE SHEETS A9.6.– SERIES DRAWINGS FOR TYPICAL INTERIOR AND EXTERIOR CEILING DETAILS.
3. SEE SHEETS A12– SERIES DRAWINGS FOR INTERIOR FINISHES.
4. FIXTURES ARE CENTERED IN PANELS OR ROOM, U.N.O.
5. GYP. BD. SOFFITS TO ALIGN W/ FACE OF WALL FINISH, TYP.
6. SEE SHEETS A.9.2.0, A9.2.0–A, AND A9.2.0–B FOR TYPICAL DIMENSIONS AND NOTES FOR 3RD AND 4TH FLOORS.
7. WALL MOUNTED FIXTURES TO BE MOUNTED @ 6'–0" A.F.F. U.N.O., SEE ALSO EXTERIOR AND INTERIOR ELEVATIONS
8. SEE ELECTRICAL DRAWINGS FOR FIXTURE DESIGNATION AND ADDITIONAL INFORMATION.
9. GROUP SERVICE POINTS TO MINIMIZE REQUIRED ACCESS LOCATIONS AND LOCATE ABOVE ADJACENT ACCESSIBLE CEILINGS WHERE POSSIBLE. COORDINATE WORK OF INSTALLERS AND TRADES AS REQUIRED TO ENSURE ACCESS TO SERVICE POINTS.
10. PROVIDE ADDITIONAL ACCESS PANELS AS REQUIRED WHERE VALVE CUT–OFFS, TRANSFORMERS OR OTHER EQUIPMENT/SERVICE OCCURS ABOVE HARD CEILINGS. MATCH ADJACENT CEILING/SOFFIT FINISH. SUBMIT LAYOUT OF ADDITIONAL ACCESS PANELS FOR ARCHITECT'S REVIEW.
11. PROVIDE BLOCKING, FRAMING OR OTHER SUPPORT AS REQUIRED FOR FIXTURES AND EQUIPMENT WHICH CANNOT BE SUPPORTED BY GRID SYSTEM. COORDINATE MANUFACTURER'S TEMPLATES AND INSTRUCTIONS AS REQUIRED.
12. COORDINATE ACCESS TO IN–LINE SMOKE DETECTORS TO BE ABOVE ACCESSIBLE CEILING.
13. PROVIDE TRANSFORMERS, ACCESSORIES, ETC., FOR LOW–VOLTAGE LIGHTING, AS REQUIRED FOR COMPLETE INSTALLATION.
14. OPEN AREAS INDICATED WITH PAINT NUMBER TO RECEIVE PAINT AT SURFACE ONLY. PROTECT M/E/P SYSTEMS AND EQUIPMENT FROM OVER SPRAY.
15. SEE THEATRICAL DRAWINGS FOR STAGE LIGHTING AND RIGGING INFORMATION.

CP_legend.dwg

GENERAL NOTES

Scale NA 4

1. GYPSUM BOARD POCKET AT EXTERIOR WINDOW HEAD FOR TREATMENT/DRAPERY. SEE 1/A9.6.2.
2. EXPOSED.
3. LIGHTING AT SHELF BELOW, SEE INTERIOR ELEVATIONS.
4. STEP LIGHT, SEE INTERIOR ELEVATIONS.
5. LINEAR MECHANICAL DIFFUSER, SEE MECHANICAL DRAWINGS.
6. ALIGN.
7. HEAT LAMP, TYPICAL EACH UNIT RESTROOM.
8. LINE OF COUNTER/CABINETRY BELOW.
9. LINE OF CABINETRY ABOVE.
10. PATH OF DRYER VENT ABOVE.
11. GYPSUM BOARD SOFFIT, PAINTED PER FINISH SCHEDULE.
12. ACCESS PANEL FOR FAN COIL UNIT. COORDINATE SIZE WITH MECHANICAL DRAWINGS.
13. TWO–HOUR RATED FLOOR/CEILING ASSEMBLY G551 AS FINISHED CEILING, PAINTED PER FINISH SCHEDULE.

CP_legend.dwg

KEYNOTES

Scale NA 3

- 2' X 2' SUSPENDED ACOUSTICAL CEILING TILE – WOOD CEILING PANELS ACT1
- 2' X 4' SUSPENDED ACOUSTICAL CEILING TILE ACT2
- 2' X 2' SUSPENDED ACOUSTICAL CEILING TILE ACT3
- 4' X 4' SUSPENDED ACOUSTICAL CEILING TILE ACT4
- 2' X 2' SUSPENDED ACOUSTICAL CEILING TILE – TRANSLUCENT PANEL ACT5
- 2' X 6' SUSPENDED ACOUSTICAL CEILING TILE ACT6
- 2' X 2' SUSPENDED ACOUSTICAL CEILING TILE ACT7
- 2' X 4' SUSPENDED ACOUSTICAL CEILING TILE ACT8
- 2' X 2' SUSPENDED ACOUSTICAL CEILING TILE – THEATER ACT9

- 4" RECESSED CFL DOWNLIGHT
- 6" RECESSED CFL DOWNLIGHT
- 6" RECESSED CFL DOWNLIGHT (WET LOCATION)
- SURFACE MOUNTED CLOSET FIXTURE
- RECSSSED HEAT LAMP
- 6" RECESSED CFL DOWNLIGHT (EXTERIOR)
- PROVIDE CEILING MOUNTED JACK ONLY
- SURFACE MOUNTED, CFL WALL SCONCE–UNIT
- EXTERIOR SURFACE MOUNTED, CFL WALL SCONCE–UNIT BALCONY
- SURFACE MOUNTED, CFL WALL SCONCE–CORRIDOR
- SURFACE MOUNTED, CFL WALL SCONCE PUBLIC BATHROOM
- EXTERIOR SURFACE MOUNTED, CFL WALL SCONCE OR STEP LIGHT
- EXTERIOR RECESSED FIXTURE W/ DROPPED LENS
- 6" RECESSED WALLWASH
- RECESSED 2'X2' DEEP CELL FIXTURE
- RECESSED 2'X4' DEEP CELL FIXTURE
- RECESSED 2'X2' DIRECT/INDIRECT FLOURESCENT FIXTURE
- RECESSED 2'X4' DIRECT/INDIRECT FLUORESCENT FIXTURE
- SURFACE MOUNTED 2'X2' FLUORESCENT FIXTURE
- SURFACE MOUNTED 2'X4' FLUORESCENT FIXTURE
- STAGGERED FLOURESCENT COVE STRIP
- FLUORESCENT STRIP LIGHT (TYP. CROSS AX @ CORRIDOR)
- UNDER–CABINET TASK LIGHT
- VANITY FIXTURE (MOUNTED VERTICALLY ON EACH SIDE OF MIRROR)
- PENDANT FIXTURE (DECORATIVE)
- PENDANT (SURFACE/SUSPENDED) FIXTURE
- CUSTOM SIZE PENDANT– 36 DIA (SURFACE/SUSPENDED) FIXTURE IN 1ST FL FOYER
- ACCESS PANELS, LOCATE AS REQUIRED. COORDINATE WITH PLUMBING
- HARDWIRED SMOKE DETECTOR WITH BATTERY BACKUP
- SUPPLY AIR DIFFUSER, SEE MECHANICAL
- RETURN AIR DIFFUSER, SEE MECHANICAL
- EXHAUST FAN DIFFUSER, SEE MECHANICAL
- CEILING MOUNTED EXIT SIGN
- WALL MOUNTED EXIT SIGN

CP_legend.dwg

CEILING FINISH AND FIXTURE LEGEND

Scale NA 1

WWC OT
Widom Wein Cohen O'Leary Terasawa

3130 Wilshire Boulevard
Sixth Floor
Santa Monica, California 90403
T (310) 828-0040
F (310) 453-9432
www.wwcot.com

Inland Empire
Palm Springs
Moorpark
Shanghai, China

RECEIVED
10:08 am, Aug 14, 2008
FRAMEMAX

Building Department Submittal: June 1, 2007
Issued For Bid: _____
Issued For Construction: _____

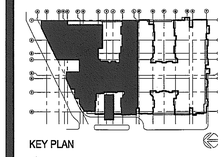

KEY PLAN

Project:
Jewish Home for The Aging
FOUNTAINVIEW AT EISENBERG VILLAGE
6440 Wilbur Ave
Reseda, CA. 91335

JEWISH HOME
JEWISH HOME FOR THE AGING
18855 Victory Blvd.
Reseda, CA 91335

Project Number: 04206.00

SECOND FLOOR REFLECTED CEILIN PLAN (NORTH)

Date: 04/05/2007
Drawn By: _____
Checked By: _____

A9.2.0-A
Sheet No.

File Path & Name: F:\PROJECTS\04206.00\A-CD\SHEETS\A9.2.0-A.DWG
© WWCOT 2006 Aug 25, 2007 - 03:55 pm

RECEIVED BY SUFFOLK ON 06/01/07

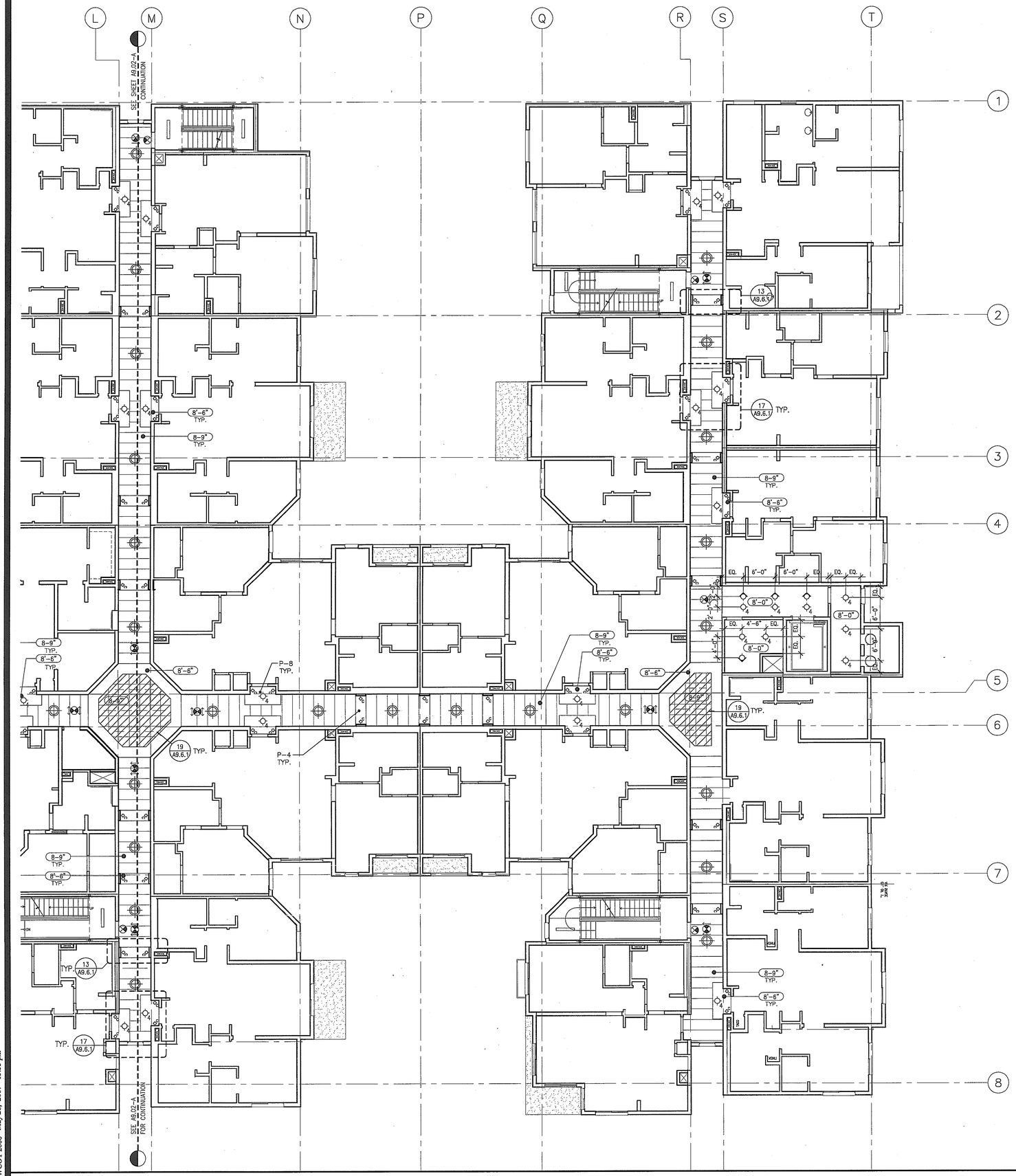

SECOND FLOOR REFLECTED CEILING PLAN - SOUTH iTHIRD AND FOURTH FLOORS SIM.)

Scale 1/8" = 1'-0" | 5

1. SEE UNIT PLANS A9.5.1 THROUGH A9.5.6 FOR UNIT CEILINGS.
2. SEE SHEETS A9.6.– SERIES DRAWINGS FOR TYPICAL INTERIOR AND EXTERIOR CEILING DETAILS.
3. SEE SHEETS A12– SERIES DRAWINGS FOR INTERIOR FINISHES.
4. FIXTURES ARE CENTERED IN PANELS OR ROOM, U.N.O.
5. GYP. BD. SOFFITS TO ALIGN W/ FACE OF WALL FINISH, TYP.
6. SEE SHEETS A.9.2.0, A9.2.0–A, AND A9.2.0–B FOR TYPICAL DIMENSIONS AND NOTES FOR 3RD AND 4TH FLOORS.
7. WALL MOUNTED FIXTURES TO BE MOUNTED @ 6'–0" A.F.F. U.N.O., SEE ALSO EXTERIOR AND INTERIOR ELEVATIONS
8. SEE ELECTRICAL DRAWINGS FOR FIXTURE DESIGNATION AND ADDITIONAL INFORMATION.
9. GROUP SERVICE POINTS TO MINIMIZE REQUIRED ACCESS LOCATIONS AND LOCATE ABOVE ADJACENT ACCESSIBLE CEILINGS WHERE POSSIBLE. COORDINATE WORK OF INSTALLERS AND TRADES AS REQUIRED TO ENSURE ACCESS TO SERVICE POINTS.
10. PROVIDE ADDITIONAL ACCESS PANELS AS REQUIRED WHERE VALVE CUT–OFFS, TRANSFORMERS OR OTHER EQUIPMENT/SERVICE OCCURS ABOVE HARD CEILINGS. MATCH ADJACENT CEILING/SOFFIT FINISH. SUBMIT LAYOUT OF ADDITIONAL ACCESS PANELS FOR ARCHITECT'S REVIEW.
11. PROVIDE BLOCKING, FRAMING OR OTHER SUPPORT AS REQUIRED FOR FIXTURES AND EQUIPMENT WHICH CANNOT BE SUPPORTED BY GRID SYSTEM. COORDINATE MANUFACTURER'S TEMPLATES AND INSTRUCTIONS AS REQUIRED.
12. COORDINATE ACCESS TO IN–LINE SMOKE DETECTORS TO BE ABOVE ACCESSIBLE CEILING.
13. PROVIDE TRANSFORMERS, ACCESSORIES, ETC., FOR LOW–VOLTAGE LIGHTING, AS REQUIRED FOR COMPLETE INSTALLATION.
14. OPEN AREAS INDICATED WITH PAINT NUMBER TO RECEIVE PAINT AT SURFACE ONLY. PROTECT M/E/P SYSTEMS AND EQUIPMENT FROM OVER SPRAY.
15. SEE THEATRICAL DRAWINGS FOR STAGE LIGHTING AND RIGGING INFORMATION.

CP_legend.dwg

GENERAL NOTES

Scale NA | 4

1. GYPSUM BOARD POCKET AT EXTERIOR WINDOW HEAD FOR TREATMENT/DRAPERY. SEE 1/A9.6.2.
2. EXPOSED.
3. LIGHTING AT SHELF BELOW, SEE INTERIOR ELEVATIONS.
4. STEP LIGHT, SEE INTERIOR ELEVATIONS.
5. LINEAR MECHANICAL DIFFUSER, SEE MECHANICAL DRAWINGS.
6. ALIGN.
7. HEAT LAMP, TYPICAL EACH UNIT RESTROOM.
8. LINE OF COUNTER/CABINETRY BELOW.
9. LINE OF CABINETRY ABOVE.
10. PATH OF DRYER VENT ABOVE.
11. GYPSUM BOARD SOFFIT, PAINTED PER FINISH SCHEDULE.
12. ACCESS PANEL FOR FAN COIL UNIT. COORDINATE SIZE WITH MECHANICAL DRAWINGS.
13. TWO–HOUR RATED FLOOR/CEILING ASSEMBLY G551 AS FINISHED CEILING, PAINTED PER FINISH SCHEDULE.

CP_legend.dwg

KEYNOTES

Scale NA | 3

- 2' X 2' SUSPENDED ACOUSTICAL CEILING TILE – WOOD CEILING PANELS ACT1
- 2' X 4' SUSPENDED ACOUSTICAL CEILING TILE ACT2
- 2' X 2' SUSPENDED ACOUSTICAL CEILING TILE ACT3
- 4' X 4' SUSPENDED ACOUSTICAL CEILING TILE ACT4
- 2' X 2' SUSPENDED ACOUSTICAL CEILING TILE – TRANSLUCENT PANEL ACT5
- 2' X 6' SUSPENDED ACOUSTICAL CEILING TILE ACT6
- 2' X 2' SUSPENDED ACOUSTICAL CEILING TILE ACT7
- 2' X 4' SUSPENDED ACOUSTICAL CEILING TILE ACT8
- 2' X 2' SUSPENDED ACOUSTICAL CEILING TILE – THEATER ACT9

- 4" RECESSED CFL DOWNLIGHT
- 6" RECESSED CFL DOWNLIGHT
- 6" RECESSED CFL DOWNLIGHT (WET LOCATION)
- SURFACE MOUNTED CLOSET FIXTURE
- RECSSSED HEAT LAMP
- 6" RECESSED CFL DOWNLIGHT (EXTERIOR)
- PROVIDE CEILING MOUNTED JACK ONLY
- SURFACE MOUNTED, CFL WALL SCONCE–UNIT
- EXTERIOR SURFACE MOUNTED, CFL WALL SCONCE–UNIT BALCONY
- SURFACE MOUNTED, CFL WALL SCONCE–CORRIDOR
- SURFACE MOUNTED, CFL WALL SCONCE PUBLIC BATHROOM
- EXTERIOR SURFACE MOUNTED, CFL WALL SCONCE OR STEP LIGHT
- EXTERIOR RECESSED FIXTURE W/ DROPPED LENS
- 6" RECESSED WALLWASH
- RECESSED 2'X2' DEEP CELL FIXTURE
- RECESSED 2'X4' DEEP CELL FIXTURE
- RECESSED 2'X2' DIRECT/INDIRECT FLOURESCENT FIXTURE
- RECESSED 2'X4' DIRECT/INDIRECT FLUORESCENT FIXTURE
- SURFACE MOUNTED 2'X2' FLUORESCENT FIXTURE
- SURFACE MOUNTED 2'X4' FLUORESCENT FIXTURE
- STAGGERED FLOURESCENT COVE STRIP
- FLUORESCENT STRIP LIGHT (TYP. CROSS AX @ CORRIDOR)
- UNDER–CABINET TASK LIGHT
- VANITY FIXTURE (MOUNTED VERTICALLY ON EACH SIDE OF MIRROR)
- PENDANT FIXTURE (DECORATIVE)
- PENDANT (SURFACE/SUSPENDED) FIXTURE
- CUSTOM SIZE PENDANT– 36 DIA (SURFACE/SUSPENDED) FIXTURE IN 1ST FL FOYER
- ACCESS PANELS, LOCATE AS REQUIRED. COORDINATE WITH PLUMBING
- HARDWIRED SMOKE DETECTOR WITH BATTERY BACKUP
- SUPPLY AIR DIFFUSER, SEE MECHANICAL
- RETURN AIR DIFFUSER, SEE MECHANICAL
- EXHAUST FAN DIFFUSER, SEE MECHANICAL
- CEILING MOUNTED EXIT SIGN
- WALL MOUNTED EXIT SIGN

CP_legend.dwg

CEILING FINISH AND FIXTURE LEGEND

Scale NA | 1

WWC OT
Widom Wein Cohen O'Leary Terasawa

3130 Wilshire Boulevard
Sixth Floor
Santa Monica, California 90403
T (310) 828-0040
F (310) 453-9432
www.wwcot.com

Inland Empire
Palm Springs
Moorpark
Shanghai, China

RECEIVED
10:08 am, Aug 14, 2008
FRAMEMAX

Building Department Submittal: June 1, 2007
Issued For Bid: _____
Issued For Construction: _____

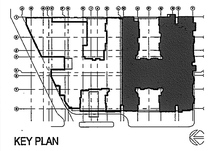

KEY PLAN

Project:
Jewish Home for The Aging
FOUNTAINVIEW AT EISENBERG VILLAGE
6440 Wilbur Ave
Reseda, CA. 91335

JEWISH HOME FOR THE AGING
18855 Victory Blvd.
Reseda, CA 91335
Project Number: 04206.00

SECOND FLOOR REFLECTED CEILIN PLAN (SOUTH)

Date: 04/05/2007
Drawn By: _____
Checked By: _____

A9.2.0-B
Sheet No.

File Path & Name: F:\PROJECTS\04206.00\A-CD\SHEETS\A9.2.0-B.DWG
© WWCOT 2006 May 28, 2007 - 03:55 pm

RECEIVED BY SUFFOLK ON 06/01/07

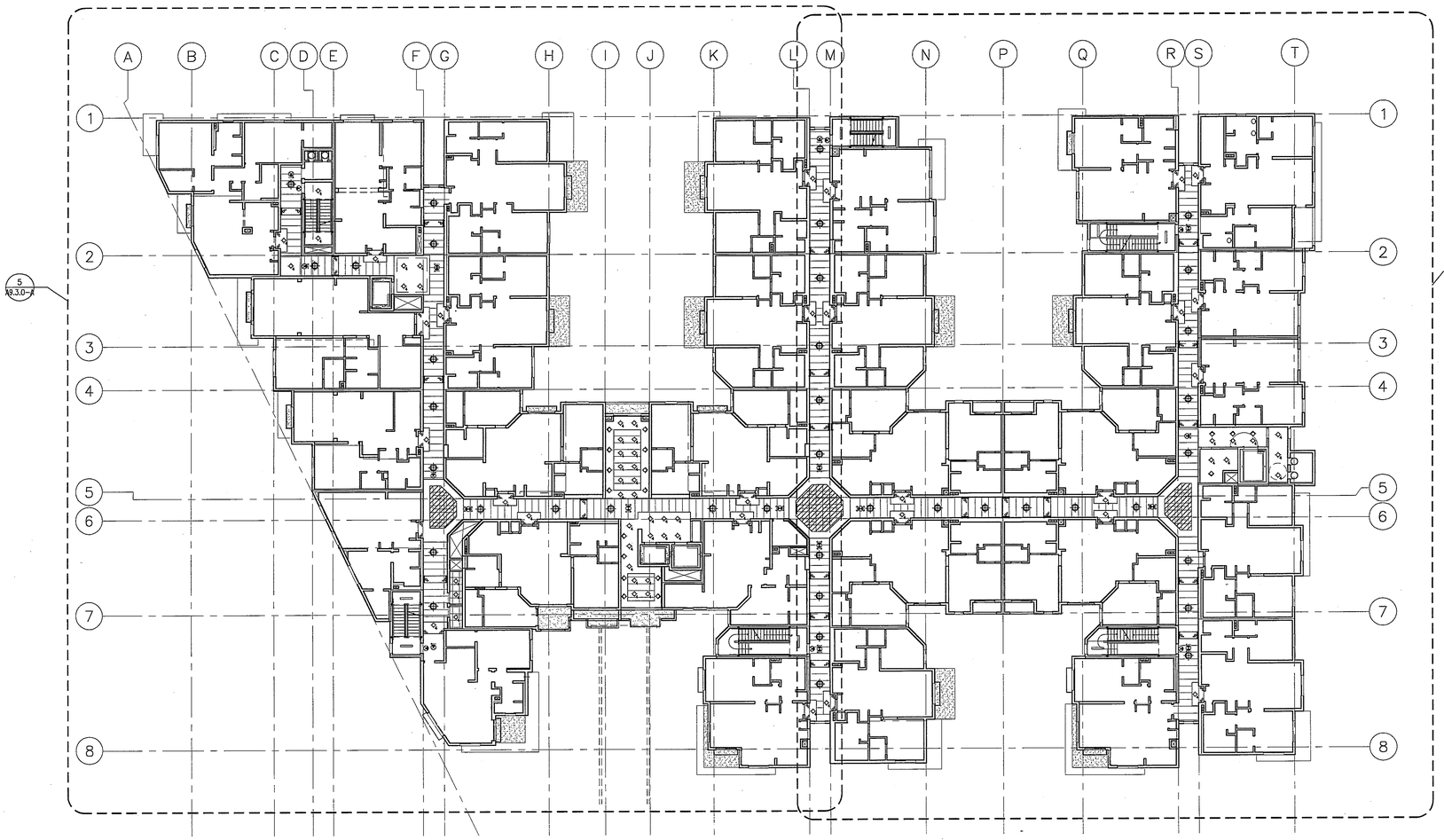

1. SEE ENLARGED REFLECTED CEILING PLANS A9.X.0-A AND A9.X.0-B FOR CEILING INFORMATION.

THIRD FLOOR REFLECTED CEILING PLAN

Scale 1/16" = 1'-0" | 5

GENERAL NOTES

Scale N.T.S. | 1

WWCOT
Widom Wein Cohen O'Leary Terasawa

3130 Wilshire Boulevard
Sixth Floor
Santa Monica, California 90403
T (310) 828-0040
F (310) 453-9432
www.wwcot.com

Inland Empire
Palm Springs
Moorpark
Shanghai, China

RECEIVED
10:08 am, Aug 14, 2008
FRAMEMAX

Building Department Submittal: June 1, 2007
Issued For Bid:
Issued For Construction:

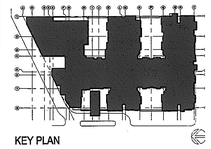

KEY PLAN

Project:
Jewish Home for The Aging

FOUNTAINVIEW AT EISENBERG VILLAGE

6440 Wilbur Ave
Reseda, CA. 91335

JEWISH HOME

JEWISH HOME FOR THE AGING
18855 Victory Blvd.
Reseda, CA 91335

Project Number: 04206.00

THIRD FLOOR REFLECTED CEILIN FLOOR PLAN

Date: 04/05/2007
Drawn By:
Checked By:

A9.3.0
Sheet No.

File Path & Name: F:\PROJECTS\04206-00\A-CD\SHEETS\A9.3.0.DWG
© WWCOT 2006 May 28, 2007 - 03:55 pm

RECEIVED BY SUFFOLK ON 06/01/07

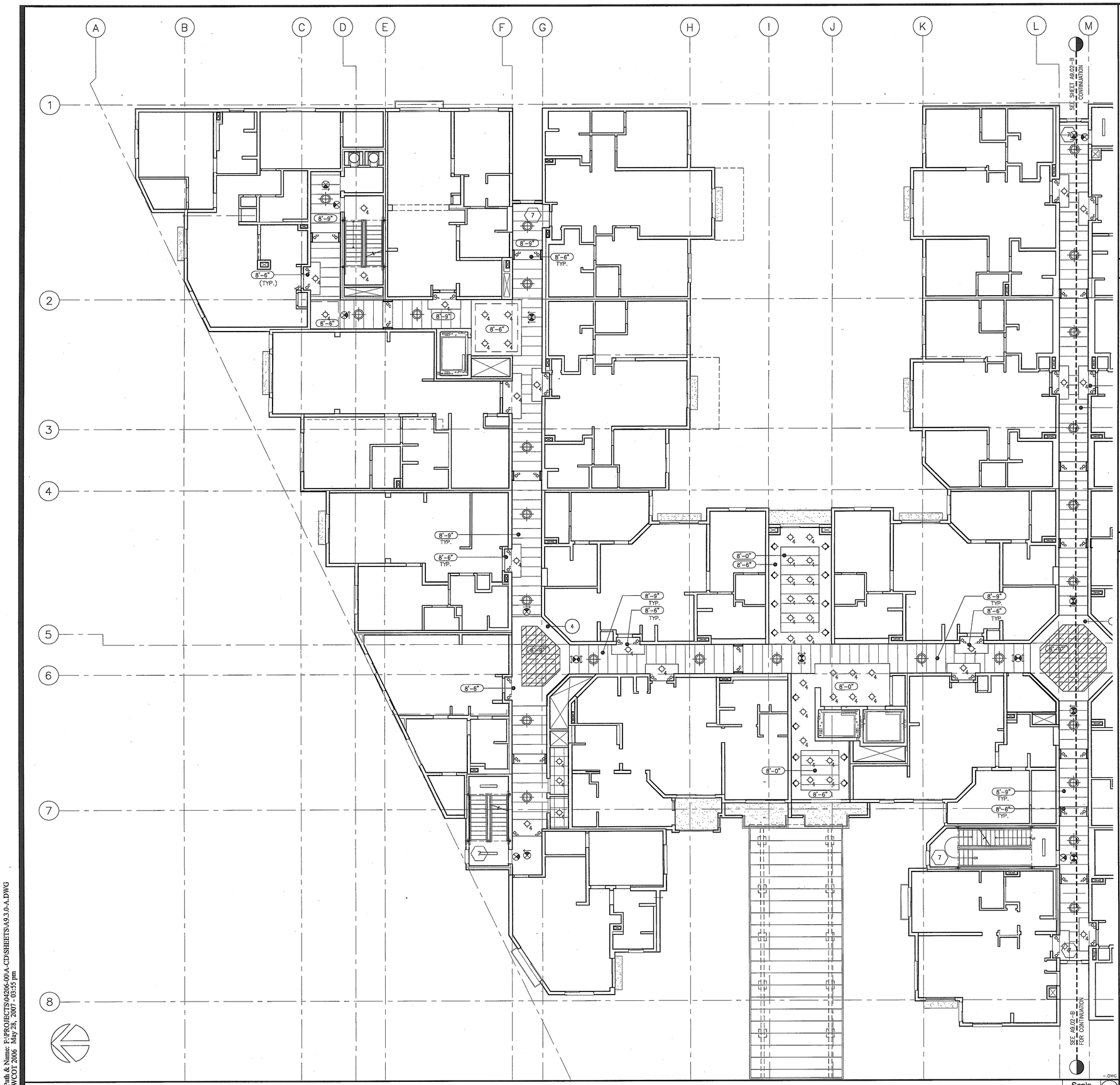

THIRD FLOOR REFLECTED CEILING PLAN - NORTH (SECOND AND FOURTH FLOORS SIM.)

Scale 1/8" = 1'-0" 5

1. SEE UNIT PLANS A9.5.1 THROUGH A9.5.6 FOR UNIT CEILINGS.
2. SEE SHEETS A9.6.– SERIES DRAWINGS FOR TYPICAL INTERIOR AND EXTERIOR CEILING DETAILS.
3. SEE SHEETS A12.– SERIES DRAWINGS FOR INTERIOR FINISHES.
4. FIXTURES ARE CENTERED IN PANELS OR ROOM, U.N.O.
5. GYP. BD. SOFFITS TO ALIGN W/ FACE OF WALL FINISH, TYP.
6. SEE SHEETS A.9.2.0, A9.2.0–A, AND A9.2.0–B FOR TYPICAL DIMENSIONS AND NOTES FOR 3RD AND 4TH FLOORS.
7. WALL MOUNTED FIXTURES TO BE MOUNTED @ 6'–0" A.F.F. U.N.O., SEE ALSO EXTERIOR AND INTERIOR ELEVATIONS
8. SEE ELECTRICAL DRAWINGS FOR FIXTURE DESIGNATION AND ADDITIONAL INFORMATION.
9. GROUP SERVICE POINTS TO MINIMIZE REQUIRED ACCESS LOCATIONS AND LOCATE ABOVE ADJACENT ACCESSIBLE CEILINGS WHERE POSSIBLE. COORDINATE WORK OF INSTALLERS AND TRADES AS REQUIRED TO ENSURE ACCESS TO SERVICE POINTS.
10. PROVIDE ADDITIONAL ACCESS PANELS AS REQUIRED WHERE VALVE CUT–OFFS, TRANSFORMERS OR OTHER EQUIPMENT/SERVICE OCCURS ABOVE HARD CEILINGS. MATCH ADJACENT CEILING/SOFFIT FINISH. SUBMIT LAYOUT OF ADDITIONAL ACCESS PANELS FOR ARCHITECT'S REVIEW.
11. PROVIDE BLOCKING, FRAMING OR OTHER SUPPORT AS REQUIRED FOR FIXTURES AND EQUIPMENT WHICH CANNOT BE SUPPORTED BY GRID SYSTEM. COORDINATE MANUFACTURER'S TEMPLATES AND INSTRUCTIONS AS REQUIRED.
12. COORDINATE ACCESS TO IN–LINE SMOKE DETECTORS TO BE ABOVE ACCESSIBLE CEILING.
13. PROVIDE TRANSFORMERS, ACCESSORIES, ETC., FOR LOW–VOLTAGE LIGHTING, AS REQUIRED FOR COMPLETE INSTALLATION.
14. OPEN AREAS INDICATED WITH PAINT NUMBER TO RECEIVE PAINT AT SURFACE ONLY. PROTECT M/E/P SYSTEMS AND EQUIPMENT FROM OVER SPRAY.
15. SEE THEATRICAL DRAWINGS FOR STAGE LIGHTING AND RIGGING INFORMATION.

CP_legend.dwg

GENERAL NOTES

Scale NA 4

1. GYPSUM BOARD POCKET AT EXTERIOR WINDOW HEAD FOR TREATMENT/DRAPERY. SEE 1/A9.6.2.
2. EXPOSED.
3. LIGHTING AT SHELF BELOW, SEE INTERIOR ELEVATIONS.
4. STEP LIGHT, SEE INTERIOR ELEVATIONS.
5. LINEAR MECHANICAL DIFFUSER, SEE MECHANICAL DRAWINGS.
6. ALIGN.
7. HEAT LAMP, TYPICAL EACH UNIT RESTROOM.
8. LINE OF COUNTER/CABINETRY BELOW.
9. LINE OF CABINETRY ABOVE.
10. PATH OF DRYER VENT ABOVE.
11. GYPSUM BOARD SOFFIT, PAINTED PER FINISH SCHEDULE.
12. ACCESS PANEL FOR FAN COIL UNIT. COORDINATE SIZE WITH MECHANICAL DRAWINGS.
13. TWO–HOUR RATED FLOOR/CEILING ASSEMBLY G551 AS FINISHED CEILING, PAINTED PER FINISH SCHEDULE.

CP_legend.dwg

KEYNOTES

Scale NA 3

- 2' X 2' SUSPENDED ACOUSTICAL CEILING TILE – WOOD CEILING PANELS ACT1
- 2' X 4' SUSPENDED ACOUSTICAL CEILING TILE ACT2
- 2' X 2' SUSPENDED ACOUSTICAL CEILING TILE ACT3
- 4' X 4' SUSPENDED ACOUSTICAL CEILING TILE ACT4
- 2' X 2' SUSPENDED ACOUSTICAL CEILING TILE – TRANSLUCENT PANEL ACT5
- 2' X 6' SUSPENDED ACOUSTICAL CEILING TILE ACT6
- 2' X 2' SUSPENDED ACOUSTICAL CEILING TILE ACT7
- 2' X 4' SUSPENDED ACOUSTICAL CEILING TILE ACT8
- 2' X 2' SUSPENDED ACOUSTICAL CEILING TILE – THEATER ACT9

- 4" RECESSED CFL DOWNLIGHT
- 6" RECESSED CFL DOWNLIGHT
- 6" RECESSED CFL DOWNLIGHT (WET LOCATION)
- SURFACE MOUNTED CLOSET FIXTURE
- RECSSSED HEAT LAMP
- 6" RECESSED CFL DOWNLIGHT (EXTERIOR)
- PROVIDE CEILING MOUNTED JACK ONLY
- SURFACE MOUNTED, CFL WALL SCONCE–UNIT
- EXTERIOR SURFACE MOUNTED, CFL WALL SCONCE–UNIT BALCONY
- SURFACE MOUNTED, CFL WALL SCONCE–CORRIDOR
- SURFACE MOUNTED, CFL WALL SCONCE PUBLIC BATHROOM
- EXTERIOR SURFACE MOUNTED, CFL WALL SCONCE OR STEP LIGHT
- EXTERIOR RECESSED FIXTURE W/ DROPPED LENS
- 6" RECESSED WALLWASH
- RECESSED 2'X2' DEEP CELL FIXTURE
- RECESSED 2'X4' DEEP CELL FIXTURE
- RECESSED 2'X2' DIRECT/INDIRECT FLOURESCENT FIXTURE
- RECESSED 2'X4' DIRECT/INDIRECT FLUORESCENT FIXTURE
- SURFACE MOUNTED 2'X2' FLUORESCENT FIXTURE
- SURFACE MOUNTED 2'X4' FLUORESCENT FIXTURE
- STAGGERED FLOURESCENT COVE STRIP
- FLUORESCENT STRIP LIGHT (TYP. CROSS AX @ CORRIDOR)
- UNDER–CABINET TASK LIGHT
- VANITY FIXTURE (MOUNTED VERTICALLY ON EACH SIDE OF MIRROR)
- PENDANT FIXTURE (DECORATIVE)
- PENDANT (SURFACE/SUSPENDED) FIXTURE
- CUSTOM SIZE PENDANT– 36 DIA (SURFACE/SUSPENDED) FIXTURE IN 1ST FL FOYER
- ACCESS PANELS, LOCATE AS REQUIRED. COORDINATE WITH PLUMBING
- HARDWIRED SMOKE DETECTOR WITH BATTERY BACKUP
- SUPPLY AIR DIFFUSER, SEE MECHANICAL
- RETURN AIR DIFFUSER, SEE MECHANICAL
- EXHAUST FAN DIFFUSER, SEE MECHANICAL
- CEILING MOUNTED EXIT SIGN
- WALL MOUNTED EXIT SIGN

CP_legend.dwg

CEILING FINISH AND FIXTURE LEGEND

Scale NA 1

WWC OT
Widom Wein Cohen O'Leary Terasawa

3130 Wilshire Boulevard
Sixth Floor
Santa Monica, California 90403
T (310) 828-0040
F (310) 453-0432
www.wwcot.com

Inland Empire
Palm Springs
Moorpark
Shanghai, China

RECEIVED
10:08 am, Aug 14, 2008
FRAMEMAX

Building Department Submittal: June 1, 2007
Issued For Bid: _____
Issued For Construction: _____

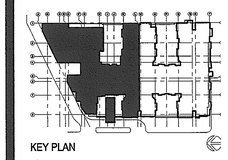

KEY PLAN

Project:
Jewish Home for The Aging
FOUNTAINVIEW AT EISENBERG VILLAGE
6440 Wilbur Ave
Reseda, CA. 91335

JEWISH HOME FOR THE AGING
18855 Victory Blvd.
Reseda, CA 91335
Project Number: 04206.00

THIRD FLOOR REFLECTED CEILIN PLAN (NORTH)

Date: 04/05/2007
Drawn By: _____
Checked By: _____

A9.3.0-A
Sheet No.

File Path & Name: F:\PROJECTS\04206.00\A-CD\SHEETS\A9.3.0-A.DWG
© WWCOT 2006 May 28, 2007 - 03:55 pm

RECEIVED BY SUFFOLK ON 06/01/07

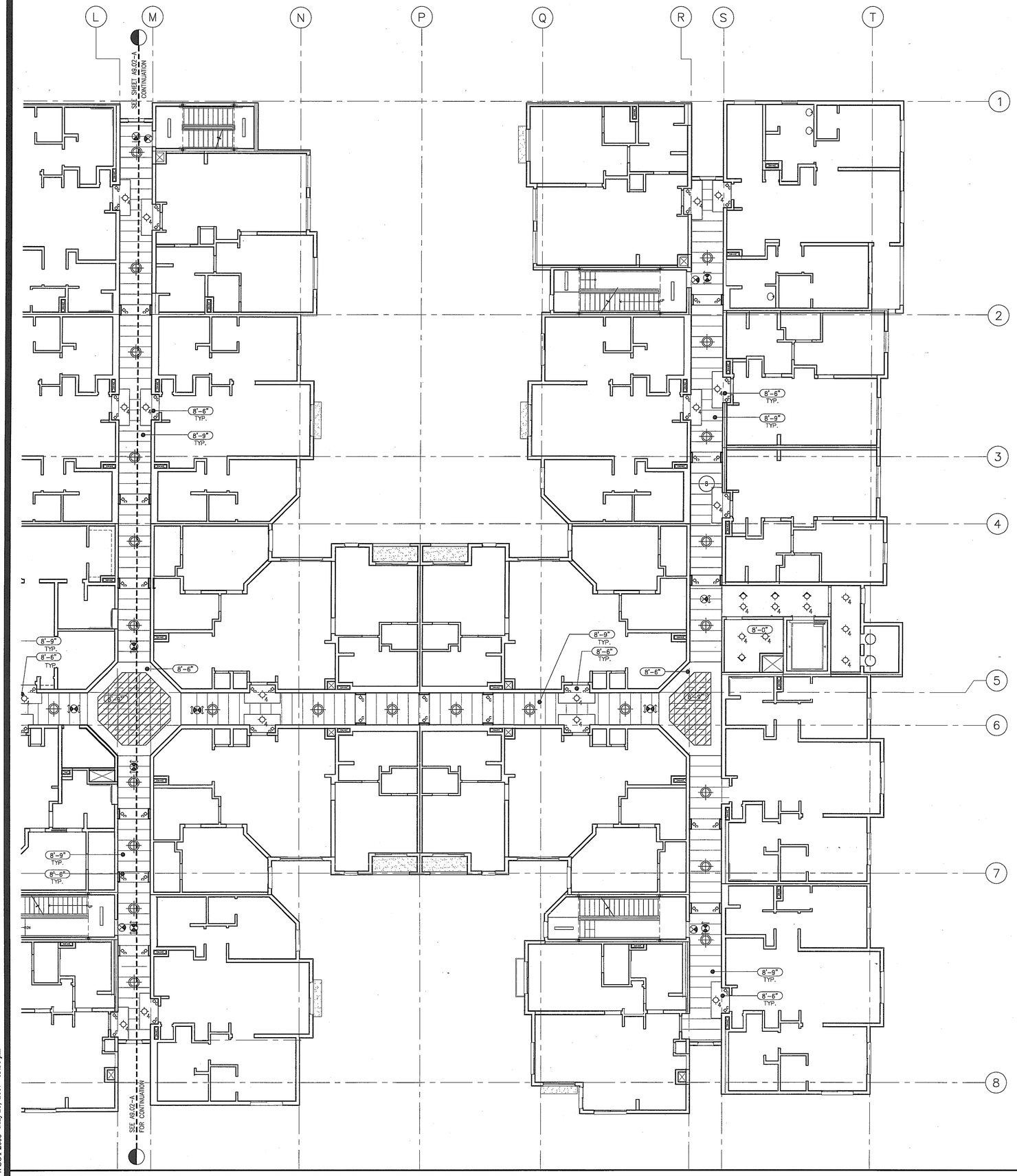

THIRD FLOOR REFLECTED CEILING PLAN - SOUTH (SECOND AND FOURTH FLOORS SIM.)

Scale 1/8" = 1'-0" 5

1. SEE UNIT PLANS A9.5.1 THROUGH A9.5.6 FOR UNIT CEILINGS.
2. SEE SHEETS A9.6.– SERIES DRAWINGS FOR TYPICAL INTERIOR AND EXTERIOR CEILING DETAILS.
3. SEE SHEETS A12– SERIES DRAWINGS FOR INTERIOR FINISHES.
4. FIXTURES ARE CENTERED IN PANELS OR ROOM, U.N.O.
5. GYP. BD. SOFFITS TO ALIGN W/ FACE OF WALL FINISH, TYP.
6. SEE SHEETS A.9.2.0, A9.2.0–A, AND A9.2.0–B FOR TYPICAL DIMENSIONS AND NOTES FOR 3RD AND 4TH FLOORS.
7. WALL MOUNTED FIXTURES TO BE MOUNTED @ 6'–0" A.F.F. U.N.O., SEE ALSO EXTERIOR AND INTERIOR ELEVATIONS
8. SEE ELECTRICAL DRAWINGS FOR FIXTURE DESIGNATION AND ADDITIONAL INFORMATION.
9. GROUP SERVICE POINTS TO MINIMIZE REQUIRED ACCESS LOCATIONS AND LOCATE ABOVE ADJACENT ACCESSIBLE CEILINGS WHERE POSSIBLE. COORDINATE WORK OF INSTALLERS AND TRADES AS REQUIRED TO ENSURE ACCESS TO SERVICE POINTS.
10. PROVIDE ADDITIONAL ACCESS PANELS AS REQUIRED WHERE VALVE CUT–OFFS, TRANSFORMERS OR OTHER EQUIPMENT/SERVICE OCCURS ABOVE HARD CEILINGS. MATCH ADJACENT CEILING/SOFFIT FINISH. SUBMIT LAYOUT OF ADDITIONAL ACCESS PANELS FOR ARCHITECT'S REVIEW.
11. PROVIDE BLOCKING, FRAMING OR OTHER SUPPORT AS REQUIRED FOR FIXTURES AND EQUIPMENT WHICH CANNOT BE SUPPORTED BY GRID SYSTEM. COORDINATE MANUFACTURER'S TEMPLATES AND INSTRUCTIONS AS REQUIRED.
12. COORDINATE ACCESS TO IN–LINE SMOKE DETECTORS TO BE ABOVE ACCESSIBLE CEILING.
13. PROVIDE TRANSFORMERS, ACCESSORIES, ETC., FOR LOW–VOLTAGE LIGHTING, AS REQUIRED FOR COMPLETE INSTALLATION.
14. OPEN AREAS INDICATED WITH PAINT NUMBER TO RECEIVE PAINT AT SURFACE ONLY. PROTECT M/E/P SYSTEMS AND EQUIPMENT FROM OVER SPRAY.
15. SEE THEATRICAL DRAWINGS FOR STAGE LIGHTING AND RIGGING INFORMATION.

CP_legend.dwg

GENERAL NOTES

Scale NA 4

1. GYPSUM BOARD POCKET AT EXTERIOR WINDOW HEAD FOR TREATMENT/DRAPERY. SEE 1/A9.6.2.
2. EXPOSED.
3. LIGHTING AT SHELF BELOW, SEE INTERIOR ELEVATIONS.
4. STEP LIGHT, SEE INTERIOR ELEVATIONS.
5. LINEAR MECHANICAL DIFFUSER, SEE MECHANICAL DRAWINGS.
6. ALIGN.
7. HEAT LAMP, TYPICAL EACH UNIT RESTROOM.
8. LINE OF COUNTER/CABINETRY BELOW.
9. LINE OF CABINETRY ABOVE.
10. PATH OF DRYER VENT ABOVE.
11. GYPSUM BOARD SOFFIT, PAINTED PER FINISH SCHEDULE.
12. ACCESS PANEL FOR FAN COIL UNIT. COORDINATE SIZE WITH MECHANICAL DRAWINGS.
13. TWO–HOUR RATED FLOOR/CEILING ASSEMBLY G551 AS FINISHED CEILING, PAINTED PER FINISH SCHEDULE.

CP_legend.dwg

KEYNOTES

Scale NA 3

- 2' X 2' SUSPENDED ACOUSTICAL CEILING TILE – WOOD CEILING PANELS ACT1
- 2' X 4' SUSPENDED ACOUSTICAL CEILING TILE ACT2
- 2' X 2' SUSPENDED ACOUSTICAL CEILING TILE ACT3
- 4' X 4' SUSPENDED ACOUSTICAL CEILING TILE ACT4
- 2' X 2' SUSPENDED ACOUSTICAL CEILING TILE – TRANSLUCENT PANEL ACT5
- 2' X 6' SUSPENDED ACOUSTICAL CEILING TILE ACT6
- 2' X 2' SUSPENDED ACOUSTICAL CEILING TILE ACT7
- 2' X 4' SUSPENDED ACOUSTICAL CEILING TILE ACT8
- 2' X 2' SUSPENDED ACOUSTICAL CEILING TILE – THEATER ACT9

- 4" RECESSED CFL DOWNLIGHT
- 6" RECESSED CFL DOWNLIGHT
- 6" RECESSED CFL DOWNLIGHT (WET LOCATION)
- SURFACE MOUNTED CLOSET FIXTURE
- RECSSSED HEAT LAMP
- 6" RECESSED CFL DOWNLIGHT (EXTERIOR)
- PROVIDE CEILING MOUNTED JACK ONLY
- SURFACE MOUNTED, CFL WALL SCONCE–UNIT
- EXTERIOR SURFACE MOUNTED, CFL WALL SCONCE–UNIT BALCONY
- SURFACE MOUNTED, CFL WALL SCONCE–CORRIDOR
- SURFACE MOUNTED, CFL WALL SCONCE PUBLIC BATHROOM
- EXTERIOR SURFACE MOUNTED, CFL WALL SCONCE OR STEP LIGHT
- EXTERIOR RECESSED FIXTURE W/ DROPPED LENS
- 6" RECESSED WALLWASH
- RECESSED 2'X2' DEEP CELL FIXTURE
- RECESSED 2'X4' DEEP CELL FIXTURE
- RECESSED 2'X2' DIRECT/INDIRECT FLOURESCENT FIXTURE
- RECESSED 2'X4' DIRECT/INDIRECT FLUORESCENT FIXTURE
- SURFACE MOUNTED 2'X2' FLUORESCENT FIXTURE
- SURFACE MOUNTED 2'X4' FLUORESCENT FIXTURE
- STAGGERED FLOURESCENT COVE STRIP
- FLUORESCENT STRIP LIGHT (TYP. CROSS AX @ CORRIDOR)
- UNDER–CABINET TASK LIGHT
- VANITY FIXTURE (MOUNTED VERTICALLY ON EACH SIDE OF MIRROR)
- PENDANT FIXTURE (DECORATIVE)
- PENDANT (SURFACE/SUSPENDED) FIXTURE
- CUSTOM SIZE PENDANT– 36 DIA (SURFACE/SUSPENDED) FIXTURE IN 1ST FL FOYER
- ACCESS PANELS, LOCATE AS REQUIRED. COORDINATE WITH PLUMBING
- (SD) HARDWIRED SMOKE DETECTOR WITH BATTERY BACKUP
- SUPPLY AIR DIFFUSER, SEE MECHANICAL
- RETURN AIR DIFFUSER, SEE MECHANICAL
- EXHAUST FAN DIFFUSER, SEE MECHANICAL
- CEILING MOUNTED EXIT SIGN
- WALL MOUNTED EXIT SIGN

CP_legend.dwg

CEILING FINISH AND FIXTURE LEGEND

Scale NA 1

WWC OT
Widom Wein Cohen O'Leary Terasawa

3130 Wilshire Boulevard
Sixth Floor
Santa Monica, California 90403
T (310) 828-0040
F (310) 453-9432
www.wwcot.com

Inland Empire
Palm Springs
Moorpark
Shanghai, China

RECEIVED
10:08 am, Aug 14, 2008
FRAMEMAX

Building Department Submittal: June 1, 2007
Issued For Bid:
Issued For Construction:

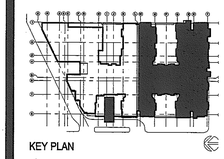

KEY PLAN

Project:
Jewish Home for The Aging
FOUNTAINVIEW AT EISENBERG VILLAGE
6440 Wilbur Ave
Reseda, CA. 91335

JEWISH HOME FOR THE AGING
18855 Victory Blvd.
Reseda, CA 91335

Project Number: 04206.00

THIRD FLOOR REFLECTED CEILIN PLAN (SOUTH)

Date: 04/05/2007
Drawn By:
Checked By:

A9.3.0-B
Sheet No.

File Path & Name: F:\PROJECTS\04206-00\A-CD\SHEETS\A9.3.0-B.DWG
© WWCOT 2006 May 28, 2007 - 03:56 pm

RECEIVED BY SUFFOLK ON 06/01/07

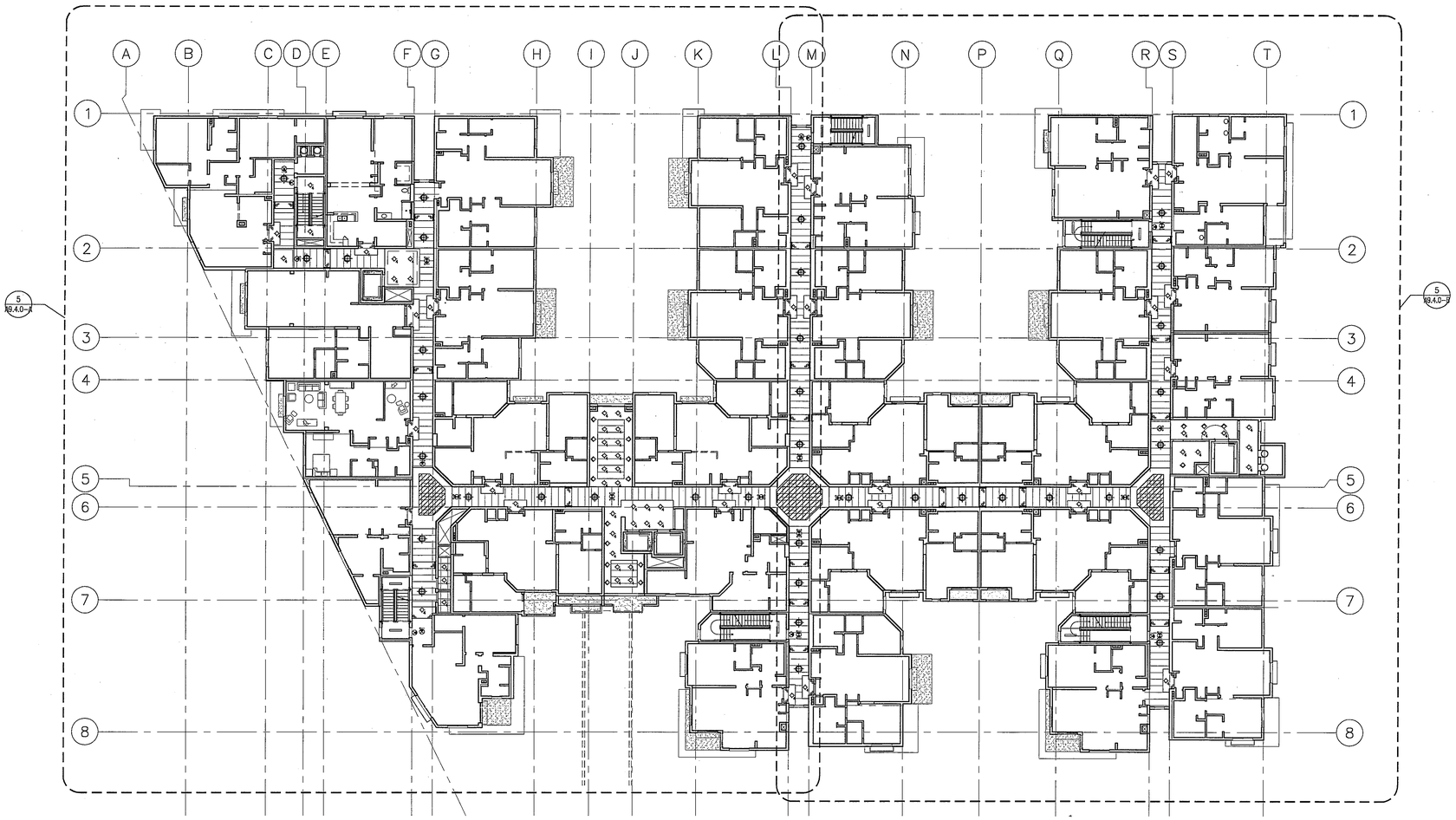

1. SEE ENLARGED REFLECTED CEILING PLANS A9.X.0-A AND A9.X.0-B FOR CEILING INFORMATION.

FOURTH FLOOR REFLECTED CEILING PLAN

Scale 1/16" = 1'-0" 5

GENERAL NOTES

CP_legend-overall.dwg

Scale N.T.S. 1

WWC OT
Widom Wein Cohen O'Leary Terasawa

3130 Wilshire Boulevard
Sixth Floor
Santa Monica, California 90403
T (310) 828-0040
F (310) 453-9432
www.wwcot.com

Inland Empire
Palm Springs
Moorpark
Shanghai, China

RECEIVED
10:08 am, Aug 14, 2008
FRAMEMAX

Building Department Submittal: June 1, 2007
Issued For Bid:
Issued For Construction:

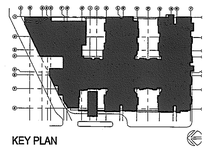

KEY PLAN

Project:
Jewish Home for The Aging
FOUNTAINVIEW AT EISENBERG VILLAGE
6440 Wilbur Ave
Reseda, CA. 91335

JEWISH HOME FOR THE AGING
18855 Victory Blvd.
Reseda, CA 91335
Project Number: 04206.00

FOURTH FLOOR REFLECTED CEILIN FLOOR PLAN

Date: 04/05/2007
Drawn By:
Checked By:

A9.4.0
Sheet No.

File Path & Name: F:\PROJECTS\04206-00\A-CD\SHEETS\A9.4.0.DWG
© WWCOT 2006 May 28, 2007 - 03:56 pm

RECEIVED BY SUFFOLK ON 06/01/07

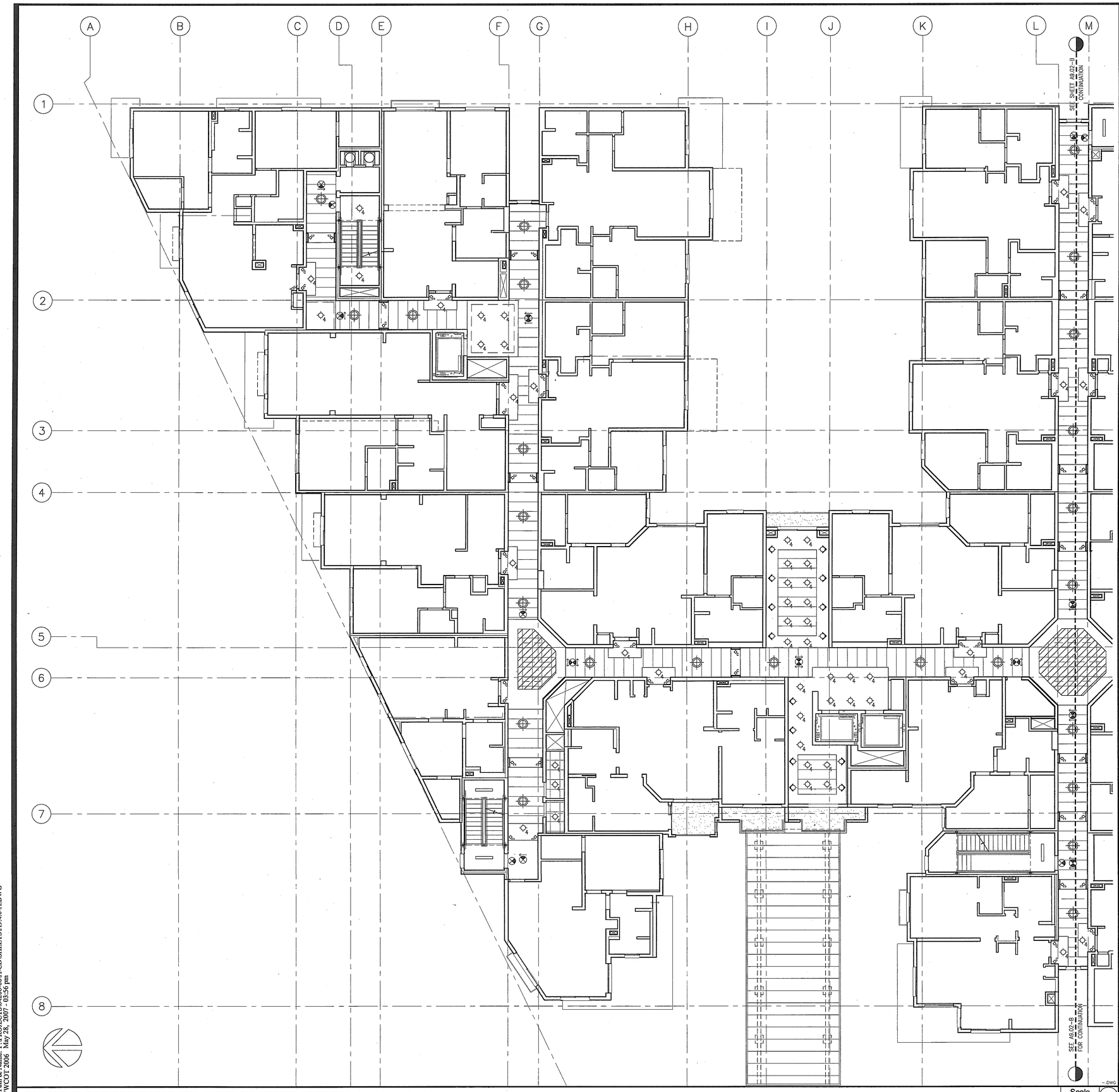

FOURTH FLOOR REFLECTED CEILING PLAN - NORTH (SECOND AND THIRD FLOORS SIM.)

Scale 1/8" = 1'-0" 5

1. SEE UNIT PLANS A9.5.1 THROUGH A9.5.6 FOR UNIT CEILINGS.
2. SEE SHEETS A9.6.– SERIES DRAWINGS FOR TYPICAL INTERIOR AND EXTERIOR CEILING DETAILS.
3. SEE SHEETS A12– SERIES DRAWINGS FOR INTERIOR FINISHES.
4. FIXTURES ARE CENTERED IN PANELS OR ROOM, U.N.O.
5. GYP. BD. SOFFITS TO ALIGN W/ FACE OF WALL FINISH, TYP.
6. SEE SHEETS A.9.2.0, A9.2.0–A, AND A9.2.0–B FOR TYPICAL DIMENSIONS AND NOTES FOR 3RD AND 4TH FLOORS.
7. WALL MOUNTED FIXTURES TO BE MOUNTED @ 6'–0" A.F.F. U.N.O., SEE ALSO EXTERIOR AND INTERIOR ELEVATIONS
8. SEE ELECTRICAL DRAWINGS FOR FIXTURE DESIGNATION AND ADDITIONAL INFORMATION.
9. GROUP SERVICE POINTS TO MINIMIZE REQUIRED ACCESS LOCATIONS AND LOCATE ABOVE ADJACENT ACCESSIBLE CEILINGS WHERE POSSIBLE. COORDINATE WORK OF INSTALLERS AND TRADES AS REQUIRED TO ENSURE ACCESS TO SERVICE POINTS.
10. PROVIDE ADDITIONAL ACCESS PANELS AS REQUIRED WHERE VALVE CUT–OFFS, TRANSFORMERS OR OTHER EQUIPMENT/SERVICE OCCURS ABOVE HARD CEILINGS. MATCH ADJACENT CEILING/SOFFIT FINISH. SUBMIT LAYOUT OF ADDITIONAL ACCESS PANELS FOR ARCHITECT'S REVIEW.
11. PROVIDE BLOCKING, FRAMING OR OTHER SUPPORT AS REQUIRED FOR FIXTURES AND EQUIPMENT WHICH CANNOT BE SUPPORTED BY GRID SYSTEM. COORDINATE MANUFACTURER'S TEMPLATES AND INSTRUCTIONS AS REQUIRED.
12. COORDINATE ACCESS TO IN–LINE SMOKE DETECTORS TO BE ABOVE ACCESSIBLE CEILING.
13. PROVIDE TRANSFORMERS, ACCESSORIES, ETC., FOR LOW–VOLTAGE LIGHTING, AS REQUIRED FOR COMPLETE INSTALLATION.
14. OPEN AREAS INDICATED WITH PAINT NUMBER TO RECEIVE PAINT AT SURFACE ONLY. PROTECT M/E/P SYSTEMS AND EQUIPMENT FROM OVER SPRAY.
15. SEE THEATRICAL DRAWINGS FOR STAGE LIGHTING AND RIGGING INFORMATION.

CP_legend.dwg

GENERAL NOTES

Scale NA 4

1. GYPSUM BOARD POCKET AT EXTERIOR WINDOW HEAD FOR TREATMENT/DRAPERY. SEE 1/A9.6.2.
2. EXPOSED.
3. LIGHTING AT SHELF BELOW, SEE INTERIOR ELEVATIONS.
4. STEP LIGHT, SEE INTERIOR ELEVATIONS.
5. LINEAR MECHANICAL DIFFUSER, SEE MECHANICAL DRAWINGS.
6. ALIGN.
7. HEAT LAMP, TYPICAL EACH UNIT RESTROOM.
8. LINE OF COUNTER/CABINETRY BELOW.
9. LINE OF CABINETRY ABOVE.
10. PATH OF DRYER VENT ABOVE.
11. GYPSUM BOARD SOFFIT, PAINTED PER FINISH SCHEDULE.
12. ACCESS PANEL FOR FAN COIL UNIT. COORDINATE SIZE WITH MECHANICAL DRAWINGS.
13. TWO–HOUR RATED FLOOR/CEILING ASSEMBLY G551 AS FINISHED CEILING, PAINTED PER FINISH SCHEDULE.

CP_legend.dwg

KEYNOTES

Scale NA 3

- 2' X 2' SUSPENDED ACOUSTICAL CEILING TILE – WOOD CEILING PANELS ACT1
- 2' X 4' SUSPENDED ACOUSTICAL CEILING TILE ACT2
- 2' X 2' SUSPENDED ACOUSTICAL CEILING TILE ACT3
- 4' X 4' SUSPENDED ACOUSTICAL CEILING TILE ACT4
- 2' X 2' SUSPENDED ACOUSTICAL CEILING TILE – TRANSLUCENT PANEL ACT5
- 2' X 6' SUSPENDED ACOUSTICAL CEILING TILE ACT6
- 2' X 2' SUSPENDED ACOUSTICAL CEILING TILE ACT7
- 2' X 4' SUSPENDED ACOUSTICAL CEILING TILE ACT8
- 2' X 2' SUSPENDED ACOUSTICAL CEILING TILE – THEATER ACT9

- 4" RECESSED CFL DOWNLIGHT
- 6" RECESSED CFL DOWNLIGHT
- 6" RECESSED CFL DOWNLIGHT (WET LOCATION)
- SURFACE MOUNTED CLOSET FIXTURE
- RECSSSED HEAT LAMP
- 6" RECESSED CFL DOWNLIGHT (EXTERIOR)
- PROVIDE CEILING MOUNTED JACK ONLY
- SURFACE MOUNTED, CFL WALL SCONCE–UNIT
- EXTERIOR SURFACE MOUNTED, CFL WALL SCONCE–UNIT BALCONY
- SURFACE MOUNTED, CFL WALL SCONCE–CORRIDOR
- SURFACE MOUNTED, CFL WALL SCONCE PUBLIC BATHROOM
- EXTERIOR SURFACE MOUNTED, CFL WALL SCONCE OR STEP LIGHT
- EXTERIOR RECESSED FIXTURE W/ DROPPED LENS
- 6" RECESSED WALLWASH
- RECESSED 2'X2' DEEP CELL FIXTURE
- RECESSED 2'X4' DEEP CELL FIXTURE
- RECESSED 2'X2' DIRECT/INDIRECT FLOURESCENT FIXTURE
- RECESSED 2'X4' DIRECT/INDIRECT FLUORESCENT FIXTURE
- SURFACE MOUNTED 2'X2' FLUORESCENT FIXTURE
- SURFACE MOUNTED 2'X4' FLUORESCENT FIXTURE
- STAGGERED FLOURESCENT COVE STRIP
- FLUORESCENT STRIP LIGHT (TYP. CROSS AX @ CORRIDOR)
- UNDER–CABINET TASK LIGHT
- VANITY FIXTURE (MOUNTED VERTICALLY ON EACH SIDE OF MIRROR)
- PENDANT FIXTURE (DECORATIVE)
- PENDANT (SURFACE/SUSPENDED) FIXTURE
- CUSTOM SIZE PENDANT– 36 DIA (SURFACE/SUSPENDED) FIXTURE IN 1ST FL FOYER
- ACCESS PANELS, LOCATE AS REQUIRED, COORDINATE WITH PLUMBING
- HARDWIRED SMOKE DETECTOR WITH BATTERY BACKUP
- SUPPLY AIR DIFFUSER, SEE MECHANICAL
- RETURN AIR DIFFUSER, SEE MECHANICAL
- EXHAUST FAN DIFFUSER, SEE MECHANICAL
- CEILING MOUNTED EXIT SIGN
- WALL MOUNTED EXIT SIGN

CP_legend.dwg

CEILING FINISH AND FIXTURE LEGEND

Scale NA 1

WWC OT
Widom Wein Cohen O'Leary Terasawa

3130 Wilshire Boulevard
Sixth Floor
Santa Monica, California 90403
T (310) 828-0040
F (310) 453-9432
www.wwcot.com

Inland Empire
Palm Springs
Moorpark
Shanghai, China

RECEIVED
10:08 am, Aug 14, 2008
FRAMEMAX

Building Department Submittal: June 1, 2007
Issued For Bid: _____
Issued For Construction: _____

KEY PLAN

Project:
Jewish Home for The Aging
FOUNTAINVIEW AT EISENBERG VILLAGE
6440 Wilbur Ave
Reseda, CA. 91335

JEWISH HOME FOR THE AGING
18855 Victory Blvd.
Reseda, CA 91335
Project Number: 04206.00

FOURTH FLOOR REFLECTED CEILIN PLAN (NORTH)

Date: 04/05/2007
Drawn By: _____
Checked By: _____

A9.4.0-A
Sheet No.

File Path & Name: F:\PROJECTS\04206-00\A-CD\SHEETS\A9.4.0-A.DWG
© WWCOT 2006 May 28, 2007 - 03:56 pm

RECEIVED BY SUFFOLK ON 06/01/07

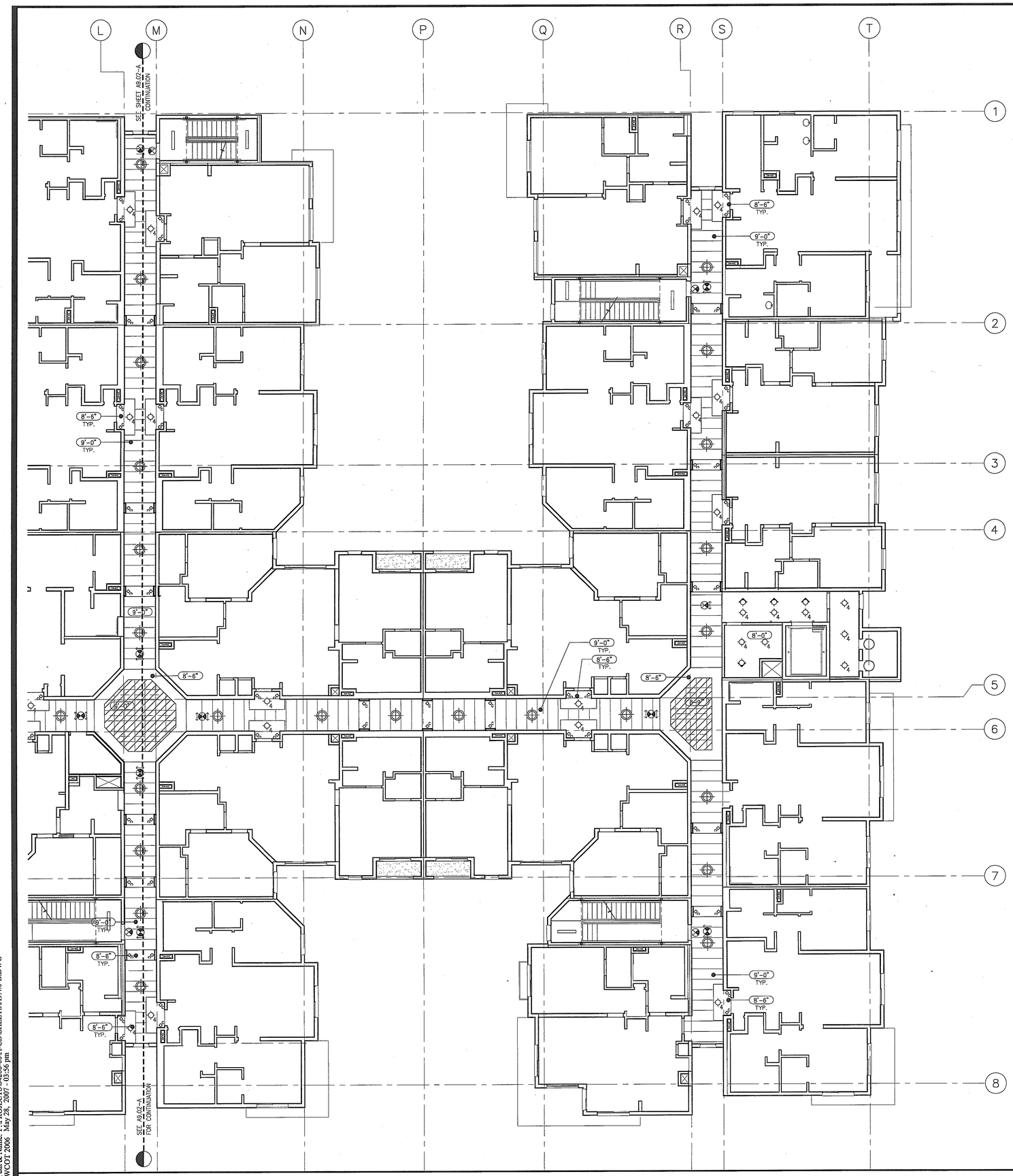

FOURTH FLOOR REFLECTED CEILING PLAN - SOUTH (SECOND AND THIRD FLOORS SIM.)

Scale 1/8" = 1'-0" (5)

1. SEE UNIT PLANS A9.5.1 THROUGH A9.5.6 FOR UNIT CEILINGS.
2. SEE SHEETS A9.6.– SERIES DRAWINGS FOR TYPICAL INTERIOR AND EXTERIOR CEILING DETAILS.
3. SEE SHEETS A12– SERIES DRAWINGS FOR INTERIOR FINISHES.
4. FIXTURES ARE CENTERED IN PANELS OR ROOM, U.N.O.
5. GYP. BD. SOFFITS TO ALIGN W/ FACE OF WALL FINISH, TYP.
6. SEE SHEETS A.9.2.0, A9.2.0–A, AND A9.2.0–B FOR TYPICAL DIMENSIONS AND NOTES FOR 3RD AND 4TH FLOORS.
7. WALL MOUNTED FIXTURES TO BE MOUNTED @ 6'–0" A.F.F. U.N.O., SEE ALSO EXTERIOR AND INTERIOR ELEVATIONS
8. SEE ELECTRICAL DRAWINGS FOR FIXTURE DESIGNATION AND ADDITIONAL INFORMATION.
9. GROUP SERVICE POINTS TO MINIMIZE REQUIRED ACCESS LOCATIONS AND LOCATE ABOVE ADJACENT ACCESSIBLE CEILINGS WHERE POSSIBLE. COORDINATE WORK OF INSTALLERS AND TRADES AS REQUIRED TO ENSURE ACCESS TO SERVICE POINTS.
10. PROVIDE ADDITIONAL ACCESS PANELS AS REQUIRED WHERE VALVE CUT–OFFS, TRANSFORMERS OR OTHER EQUIPMENT/SERVICE OCCURS ABOVE HARD CEILINGS. MATCH ADJACENT CEILING/SOFFIT FINISH. SUBMIT LAYOUT OF ADDITIONAL ACCESS PANELS FOR ARCHITECT'S REVIEW.
11. PROVIDE BLOCKING, FRAMING OR OTHER SUPPORT AS REQUIRED FOR FIXTURES AND EQUIPMENT WHICH CANNOT BE SUPPORTED BY GRID SYSTEM. COORDINATE MANUFACTURER'S TEMPLATES AND INSTRUCTIONS AS REQUIRED.
12. COORDINATE ACCESS TO IN–LINE SMOKE DETECTORS TO BE ABOVE ACCESSIBLE CEILING.
13. PROVIDE TRANSFORMERS, ACCESSORIES, ETC., FOR LOW–VOLTAGE LIGHTING, AS REQUIRED FOR COMPLETE INSTALLATION.
14. OPEN AREAS INDICATED WITH PAINT NUMBER TO RECEIVE PAINT AT SURFACE ONLY. PROTECT M/E/P SYSTEMS AND EQUIPMENT FROM OVER SPRAY.
15. SEE THEATRICAL DRAWINGS FOR STAGE LIGHTING AND RIGGING INFORMATION.

CP_legend.dwg

GENERAL NOTES

Scale NA (4)

1. GYPSUM BOARD POCKET AT EXTERIOR WINDOW HEAD FOR TREATMENT/DRAPERY. SEE 1/A9.6.2.
2. EXPOSED.
3. LIGHTING AT SHELF BELOW, SEE INTERIOR ELEVATIONS.
4. STEP LIGHT, SEE INTERIOR ELEVATIONS.
5. LINEAR MECHANICAL DIFFUSER, SEE MECHANICAL DRAWINGS.
6. ALIGN.
7. HEAT LAMP, TYPICAL EACH UNIT RESTROOM.
8. LINE OF COUNTER/CABINETRY BELOW.
9. LINE OF CABINETRY ABOVE.
10. PATH OF DRYER VENT ABOVE.
11. GYPSUM BOARD SOFFIT, PAINTED PER FINISH SCHEDULE.
12. ACCESS PANEL FOR FAN COIL UNIT. COORDINATE SIZE WITH MECHANICAL DRAWINGS.
13. TWO–HOUR RATED FLOOR/CEILING ASSEMBLY G551 AS FINISHED CEILING, PAINTED PER FINISH SCHEDULE.

CP_legend.dwg

KEYNOTES

Scale NA (3)

- 2' X 2' SUSPENDED ACOUSTICAL CEILING TILE – WOOD CEILING PANELS ACT1
- 2' X 4' SUSPENDED ACOUSTICAL CEILING TILE ACT2
- 2' X 2' SUSPENDED ACOUSTICAL CEILING TILE ACT3
- 4' X 4' SUSPENDED ACOUSTICAL CEILING TILE ACT4
- 2' X 2' SUSPENDED ACOUSTICAL CEILING TILE – TRANSLUCENT PANEL ACT5
- 2' X 6' SUSPENDED ACOUSTICAL CEILING TILE ACT6
- 2' X 2' SUSPENDED ACOUSTICAL CEILING TILE ACT7
- 2' X 4' SUSPENDED ACOUSTICAL CEILING TILE ACT8
- 2' X 2' SUSPENDED ACOUSTICAL CEILING TILE – THEATER ACT9
- 4" RECESSED CFL DOWNLIGHT
- 6" RECESSED CFL DOWNLIGHT
- 6" RECESSED CFL DOWNLIGHT (WET LOCATION)
- SURFACE MOUNTED CLOSET FIXTURE
- RECSSSED HEAT LAMP
- 6" RECESSED CFL DOWNLIGHT (EXTERIOR)
- PROVIDE CEILING MOUNTED JACK ONLY
- SURFACE MOUNTED, CFL WALL SCONCE–UNIT
- EXTERIOR SURFACE MOUNTED, CFL WALL SCONCE–UNIT BALCONY
- SURFACE MOUNTED, CFL WALL SCONCE–CORRIDOR
- SURFACE MOUNTED, CFL WALL SCONCE PUBLIC BATHROOM
- EXTERIOR SURFACE MOUNTED, CFL WALL SCONCE OR STEP LIGHT
- EXTERIOR RECESSED FIXTURE W/ DROPPED LENS
- 6" RECESSED WALLWASH
- RECESSED 2'X2' DEEP CELL FIXTURE
- RECESSED 2'X4' DEEP CELL FIXTURE
- RECESSED 2'X2' DIRECT/INDIRECT FLOURESCENT FIXTURE
- RECESSED 2'X4' DIRECT/INDIRECT FLUORESCENT FIXTURE
- SURFACE MOUNTED 2'X2' FLUORESCENT FIXTURE
- SURFACE MOUNTED 2'X4' FLUORESCENT FIXTURE
- STAGGERED FLOURESCENT COVE STRIP
- FLUORESCENT STRIP LIGHT (TYP. CROSS AX @ CORRIDOR)
- UNDER–CABINET TASK LIGHT
- VANITY FIXTURE (MOUNTED VERTICALLY ON EACH SIDE OF MIRROR)
- PENDANT FIXTURE (DECORATIVE)
- PENDANT (SURFACE/SUSPENDED) FIXTURE
- CUSTOM SIZE PENDANT– 36 DIA (SURFACE/SUSPENDED) FIXTURE IN 1ST FL FOYER
- ACCESS PANELS, LOCATE AS REQUIRED. COORDINATE WITH PLUMBING
- HARDWIRED SMOKE DETECTOR WITH BATTERY BACKUP
- SUPPLY AIR DIFFUSER, SEE MECHANICAL
- RETURN AIR DIFFUSER, SEE MECHANICAL
- EXHAUST FAN DIFFUSER, SEE MECHANICAL
- CEILING MOUNTED EXIT SIGN
- WALL MOUNTED EXIT SIGN

CP_legend.dwg

CEILING FINISH AND FIXTURE LEGEND

Scale NA (1)

WWC OT
Widom Wein Cohen O'Leary Terasawa

3130 Wilshire Boulevard
Sixth Floor
Santa Monica, California 90403
T (310) 828-0040
F (310) 453-9432
www.wwcot.com

Inland Empire
Palm Springs
Moorpark
Shanghai, China

RECEIVED
10:08 am, Aug 14, 2008
FRAMEMAX

Building Department Submittal: June 1, 2007
Issued For Bid:
Issued For Construction:

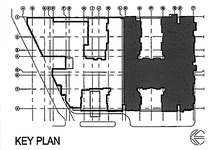

KEY PLAN

Project:
Jewish Home for The Aging
FOUNTAINVIEW AT EISENBERG VILLAGE
6440 Wilbur Ave
Reseda, CA. 91335

JEWISH HOME
JEWISH HOME FOR THE AGING
18855 Victory Blvd.
Reseda, CA 91335

Project Number: 04206.00

FOURTH FLOOR REFLECTED CEILIN PLAN (SOUTH)

Date: 04/05/2007
Drawn By:
Checked By:

A9.4.0-B
Sheet No.

File Path & Name: F:\PROJECTS\04206.00\A-CD\SHEETS\A9.4.0-B.DWG
© WWCOT 2006 May 28, 2007 - 03:56 pm

RECEIVED BY SUFFOLK ON 06/01/07

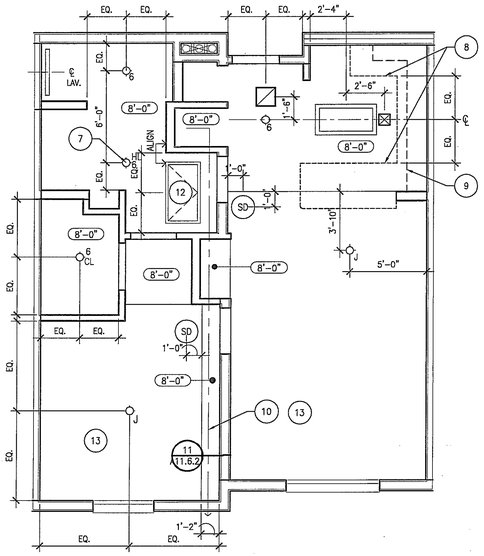

Enlarged Unit Reflected Ceiling Plan-1BJ-A — Scale 1/4" = 1'-0" — 5

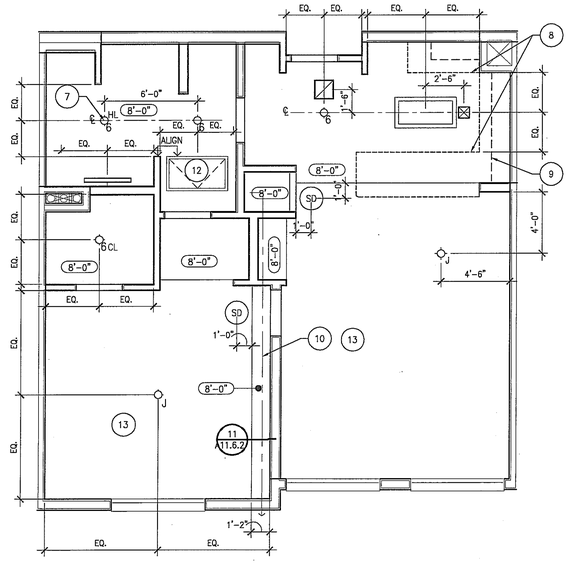

Enlarged Unit Reflected Ceiling Plan-1B-A — Scale 1/4" = 1'-0" — 3

1. SEE UNIT PLANS A9.5.1 THROUGH A9.5.6 FOR UNIT CEILINGS.
2. SEE SHEETS A9.6.– SERIES DRAWINGS FOR TYPICAL INTERIOR AND EXTERIOR CEILING DETAILS.
3. SEE SHEETS A12– SERIES DRAWINGS FOR INTERIOR FINISHES.
4. FIXTURES ARE CENTERED IN PANELS OR ROOM, U.N.O.
5. GYP. BD. SOFFITS TO ALIGN W/ FACE OF WALL FINISH, TYP.
6. SEE SHEETS A.9.2.0, A9.2.0–A, AND A9.2.0–B FOR TYPICAL DIMENSIONS AND NOTES FOR 3RD AND 4TH FLOORS.
7. WALL MOUNTED FIXTURES TO BE MOUNTED @ 6'–0" A.F.F. U.N.O., SEE ALSO EXTERIOR AND INTERIOR ELEVATIONS
8. SEE ELECTRICAL DRAWINGS FOR FIXTURE DESIGNATION AND ADDITIONAL INFORMATION.
9. GROUP SERVICE POINTS TO MINIMIZE REQUIRED ACCESS LOCATIONS AND LOCATE ABOVE ADJACENT ACCESSIBLE CEILINGS WHERE POSSIBLE. COORDINATE WORK OF INSTALLERS AND TRADES AS REQUIRED TO ENSURE ACCESS TO SERVICE POINTS.
10. PROVIDE ADDITIONAL ACCESS PANELS AS REQUIRED WHERE VALVE CUT–OFFS, TRANSFORMERS OR OTHER EQUIPMENT/SERVICE OCCURS ABOVE HARD CEILINGS. MATCH ADJACENT CEILING/SOFFIT FINISH. SUBMIT LAYOUT OF ADDITIONAL ACCESS PANELS FOR ARCHITECT'S REVIEW.
11. PROVIDE BLOCKING, FRAMING OR OTHER SUPPORT AS REQUIRED FOR FIXTURES AND EQUIPMENT WHICH CANNOT BE SUPPORTED BY GRID SYSTEM. COORDINATE MANUFACTURER'S TEMPLATES AND INSTRUCTIONS AS REQUIRED.
12. COORDINATE ACCESS TO IN–LINE SMOKE DETECTORS TO BE ABOVE ACCESSIBLE CEILING.
13. PROVIDE TRANSFORMERS, ACCESSORIES, ETC., FOR LOW–VOLTAGE LIGHTING, AS REQUIRED FOR COMPLETE INSTALLATION.
14. OPEN AREAS INDICATED WITH PAINT NUMBER TO RECEIVE PAINT AT SURFACE ONLY. PROTECT M/E/P SYSTEMS AND EQUIPMENT FROM OVER SPRAY.
15. SEE THEATRICAL DRAWINGS FOR STAGE LIGHTING AND RIGGING INFORMATION.

CP_legend.dwg

GENERAL NOTES — Scale NA — 4

1. GYPSUM BOARD POCKET AT EXTERIOR WINDOW HEAD FOR TREATMENT/DRAPERY. SEE 1/A9.5.2.
2. EXPOSED.
3. LIGHTING AT SHELF BELOW, SEE INTERIOR ELEVATIONS.
4. STEP LIGHT, SEE INTERIOR ELEVATIONS.
5. LINEAR MECHANICAL DIFFUSER, SEE MECHANICAL DRAWINGS.
6. ALIGN.
7. HEAT LAMP, TYPICAL EACH UNIT RESTROOM.
8. LINE OF COUNTER/CABINETRY BELOW.
9. LINE OF CABINETRY ABOVE.
10. PATH OF DRYER VENT ABOVE.
11. GYPSUM BOARD SOFFIT, PAINTED PER FINISH SCHEDULE.
12. ACCESS PANEL FOR FAN COIL UNIT. COORDINATE SIZE WITH MECHANICAL DRAWINGS.
13. TWO–HOUR RATED FLOOR/CEILING ASSEMBLY G551 AS FINISHED CEILING, PAINTED PER FINISH SCHEDULE.

CP_legend.dwg

KEYNOTES — Scale NA — 3

- 2' X 2' SUSPENDED ACOUSTICAL CEILING TILE – WOOD CEILING PANELS ACT1
- 2' X 4' SUSPENDED ACOUSTICAL CEILING TILE ACT2
- 2' X 2' SUSPENDED ACOUSTICAL CEILING TILE ACT3
- 4' X 4' SUSPENDED ACOUSTICAL CEILING TILE ACT4
- 2' X 2' SUSPENDED ACOUSTICAL CEILING TILE – TRANSLUCENT PANEL ACT5
- 2' X 6' SUSPENDED ACOUSTICAL CEILING TILE ACT6
- 2' X 2' SUSPENDED ACOUSTICAL CEILING TILE ACT7
- 2' X 4' SUSPENDED ACOUSTICAL CEILING TILE ACT8
- 2' X 2' SUSPENDED ACOUSTICAL CEILING TILE – THEATER ACT9

- 4" RECESSED CFL DOWNLIGHT
- 6" RECESSED CFL DOWNLIGHT
- 6" RECESSED CFL DOWNLIGHT (WET LOCATION)
- SURFACE MOUNTED CLOSET FIXTURE
- RECSSSED HEAT LAMP
- 6" RECESSED CFL DOWNLIGHT (EXTERIOR)
- PROVIDE CEILING MOUNTED JACK ONLY
- SURFACE MOUNTED, CFL WALL SCONCE–UNIT
- EXTERIOR SURFACE MOUNTED, CFL WALL SCONCE–UNIT BALCONY
- SURFACE MOUNTED, CFL WALL SCONCE–CORRIDOR
- SURFACE MOUNTED, CFL WALL SCONCE PUBLIC BATHROOM
- EXTERIOR SURFACE MOUNTED, CFL WALL SCONCE OR STEP LIGHT
- EXTERIOR RECESSED FIXTURE W/ DROPPED LENS
- 6" RECESSED WALLWASH
- RECESSED 2'X2' DEEP CELL FIXTURE
- RECESSED 2'X4' DEEP CELL FIXTURE
- RECESSED 2'X2' DIRECT/INDIRECT FLOURESCENT FIXTURE
- RECESSED 2'X4' DIRECT/INDIRECT FLUORESCENT FIXTURE
- SURFACE MOUNTED 2'X2' FLUORESCENT FIXTURE
- SURFACE MOUNTED 2'X4' FLUORESCENT FIXTURE

- STAGGERED FLOURESCENT COVE STRIP
- FLUORESCENT STRIP LIGHT (TYP. CROSS AX @ CORRIDOR)
- UNDER–CABINET TASK LIGHT
- VANITY FIXTURE (MOUNTED VERTICALLY ON EACH SIDE OF MIRROR)
- PENDANT FIXTURE (DECORATIVE)
- PENDANT (SURFACE/SUSPENDED) FIXTURE
- CUSTOM SIZE PENDANT– 36 DIA (SURFACE/SUSPENDED) FIXTURE IN 1ST FL FOYER
- ACCESS PANELS, LOCATE AS REQUIRED. COORDINATE WITH PLUMBING
- HARDWIRED SMOKE DETECTOR WITH BATTERY BACKUP
- SUPPLY AIR DIFFUSER, SEE MECHANICAL
- RETURN AIR DIFFUSER, SEE MECHANICAL
- EXHAUST FAN DIFFUSER, SEE MECHANICAL
- CEILING MOUNTED EXIT SIGN
- WALL MOUNTED EXIT SIGN

CEILING FINISH AND FIXTURE LEGEND — Scale NA — 1

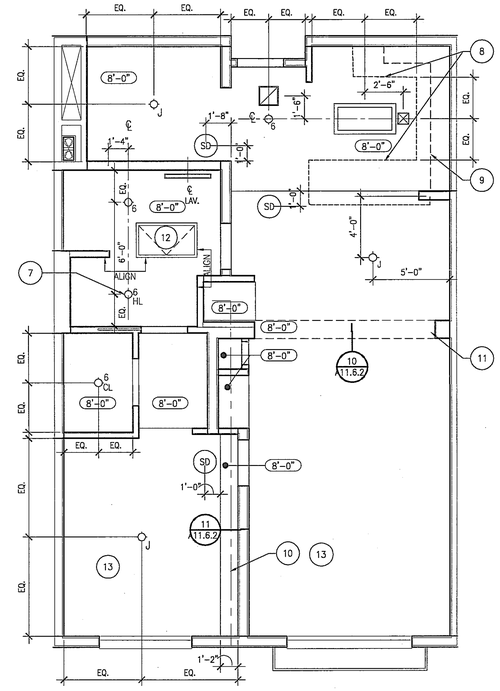

Enlarged Unit Reflected Ceiling Plan-1BJ-B+DEN — Scale 1/4" = 1'-0" — 4

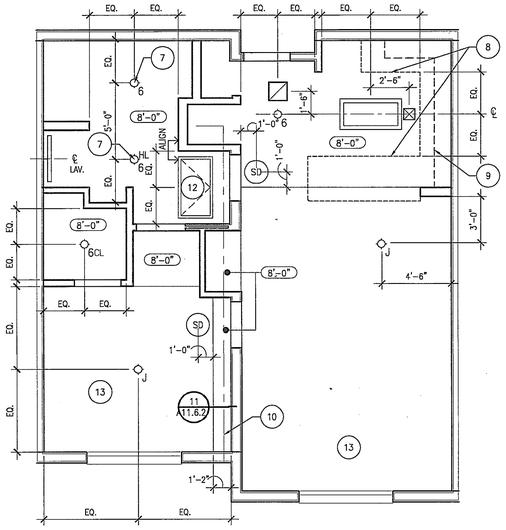

Enlarged Unit Reflected Ceiling Plan-1BJ-C — Scale 1/4" = 1'-0" — 2

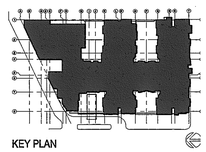

KEY PLAN

WWC OT
Widom Wein Cohen O'Leary Terasawa

3130 Wilshire Boulevard
Sixth Floor
Santa Monica, California 90403
T (310) 828-0040
F (310) 453-9432
www.wwcot.com

Inland Empire
Palm Springs
Moorpark
Shanghai, China

RECEIVED
10:08 am, Aug 14, 2008
FRAMEMAX

Building Department Submittal: June 1, 2007
Issued For Bid:
Issued For Construction:

Project:
Jewish Home for The Aging
FOUNTAINVIEW AT EISENBERG VILLAGE

6440 Wilbur Ave
Reseda, CA. 91335

JEWISH HOME FOR THE AGING
18855 Victory Blvd.
Reseda, CA 91335

Project Number: 04206.00

Enlarged Unit Reflected Ceiling Plar

Date: 04/05/2007
Drawn By:
Checked By:

A9.5.1
Sheet No.

File Path & Name: P:\PROJECTS\04206-00\A-CD\SHEETS\A9.5.1.DWG
© WWCOT 2006 May 28, 2007 - 03:57 pm

RECEIVED BY SUFFOLK ON 06/01/07

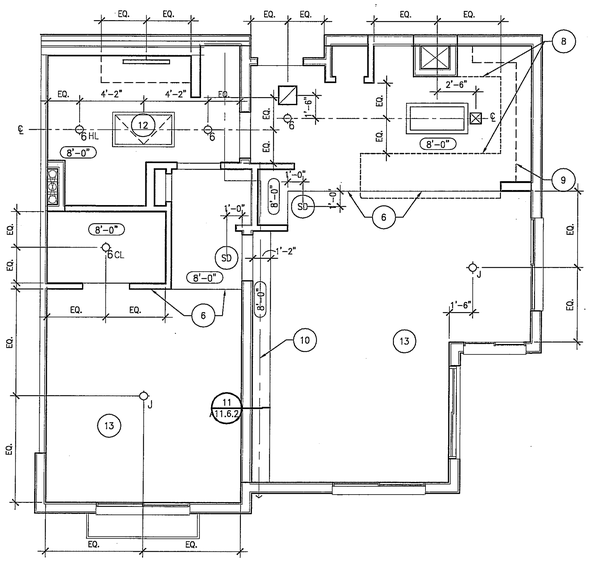

Enlarged Unit Reflected Ceiling Plan-1B-C — Scale 1/4" = 1'-0" — 13

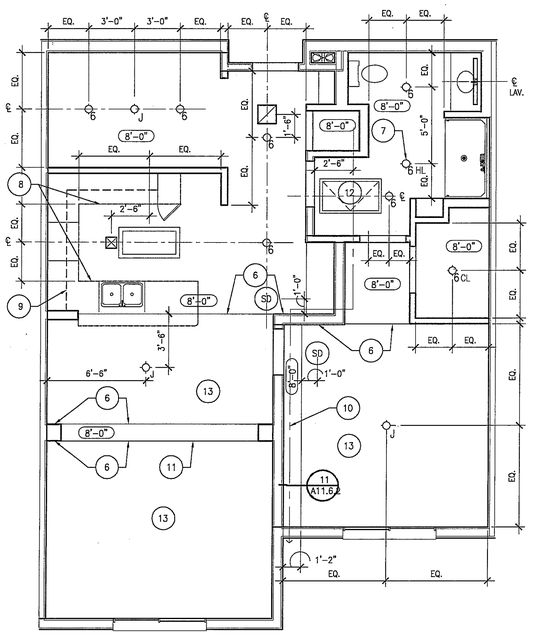

Enlarged Unit Reflected Ceiling Plan - 1B-E — Scale 1/4" = 1'-0" — 5

1. SEE UNIT PLANS A9.5.1 THROUGH A9.5.6 FOR UNIT CEILINGS.
2. SEE SHEETS A9.6.– SERIES DRAWINGS FOR TYPICAL INTERIOR AND EXTERIOR CEILING DETAILS.
3. SEE SHEETS A12– SERIES DRAWINGS FOR INTERIOR FINISHES.
4. FIXTURES ARE CENTERED IN PANELS OR ROOM, U.N.O.
5. GYP. BD. SOFFITS TO ALIGN W/ FACE OF WALL FINISH, TYP.
6. SEE SHEETS A.9.2.0, A9.2.0–A, AND A9.2.0–B FOR TYPICAL DIMENSIONS AND NOTES FOR 3RD AND 4TH FLOORS.
7. WALL MOUNTED FIXTURES TO BE MOUNTED @ 6'–0" A.F.F. U.N.O., SEE ALSO EXTERIOR AND INTERIOR ELEVATIONS
8. SEE ELECTRICAL DRAWINGS FOR FIXTURE DESIGNATION AND ADDITIONAL INFORMATION.
9. GROUP SERVICE POINTS TO MINIMIZE REQUIRED ACCESS LOCATIONS AND LOCATE ABOVE ADJACENT ACCESSIBLE CEILINGS WHERE POSSIBLE. COORDINATE WORK OF INSTALLERS AND TRADES AS REQUIRED TO ENSURE ACCESS TO SERVICE POINTS.
10. PROVIDE ADDITIONAL ACCESS PANELS AS REQUIRED WHERE VALVE CUT–OFFS, TRANSFORMERS OR OTHER EQUIPMENT/SERVICE OCCURS ABOVE HARD CEILINGS. MATCH ADJACENT CEILING/SOFFIT FINISH. SUBMIT LAYOUT OF ADDITIONAL ACCESS PANELS FOR ARCHITECT'S REVIEW.
11. PROVIDE BLOCKING, FRAMING OR OTHER SUPPORT AS REQUIRED FOR FIXTURES AND EQUIPMENT WHICH CANNOT BE SUPPORTED BY GRID SYSTEM. COORDINATE MANUFACTURER'S TEMPLATES AND INSTRUCTIONS AS REQUIRED.
12. COORDINATE ACCESS TO IN–LINE SMOKE DETECTORS TO BE ABOVE ACCESSIBLE CEILING.
13. PROVIDE TRANSFORMERS, ACCESSORIES, ETC., FOR LOW–VOLTAGE LIGHTING, AS REQUIRED FOR COMPLETE INSTALLATION.
14. OPEN AREAS INDICATED WITH PAINT NUMBER TO RECEIVE PAINT AT SURFACE ONLY. PROTECT M/E/P SYSTEMS AND EQUIPMENT FROM OVER SPRAY.
15. SEE THEATRICAL DRAWINGS FOR STAGE LIGHTING AND RIGGING INFORMATION.

CP_legend.dwg

GENERAL NOTES — Scale NA — 4

1. GYPSUM BOARD POCKET AT EXTERIOR WINDOW HEAD FOR TREATMENT/DRAPERY. SEE 1/A9.6.2.
2. EXPOSED.
3. LIGHTING AT SHELF BELOW, SEE INTERIOR ELEVATIONS.
4. STEP LIGHT, SEE INTERIOR ELEVATIONS.
5. LINEAR MECHANICAL DIFFUSER, SEE MECHANICAL DRAWINGS.
6. ALIGN.
7. HEAT LAMP, TYPICAL EACH UNIT RESTROOM.
8. LINE OF COUNTER/CABINETRY BELOW.
9. LINE OF CABINETRY ABOVE.
10. PATH OF DRYER VENT ABOVE.
11. GYPSUM BOARD SOFFIT, PAINTED PER FINISH SCHEDULE.
12. ACCESS PANEL FOR FAN COIL UNIT. COORDINATE SIZE WITH MECHANICAL DRAWINGS.
13. TWO–HOUR RATED FLOOR/CEILING ASSEMBLY GS51 AS FINISHED CEILING, PAINTED PER FINISH SCHEDULE.

CP_legend.dwg

KEYNOTES — Scale NA — 3

- 2' X 2' SUSPENDED ACOUSTICAL CEILING TILE – WOOD CEILING PANELS ACT1
- 2' X 4' SUSPENDED ACOUSTICAL CEILING TILE ACT2
- 2' X 2' SUSPENDED ACOUSTICAL CEILING TILE ACT3
- 4' X 4' SUSPENDED ACOUSTICAL CEILING TILE ACT4
- 2' X 2' SUSPENDED ACOUSTICAL CEILING TILE – TRANSLUCENT PANEL ACT5
- 2' X 6' SUSPENDED ACOUSTICAL CEILING TILE ACT6
- 2' X 2' SUSPENDED ACOUSTICAL CEILING TILE ACT7
- 2' X 4' SUSPENDED ACOUSTICAL CEILING TILE ACT8
- 2' X 2' SUSPENDED ACOUSTICAL CEILING TILE – THEATER ACT9

- 4" RECESSED CFL DOWNLIGHT
- 6" RECESSED CFL DOWNLIGHT
- 6" RECESSED CFL DOWNLIGHT (WET LOCATION)
- SURFACE MOUNTED CLOSET FIXTURE
- RECSSSED HEAT LAMP
- 6" RECESSED CFL DOWNLIGHT (EXTERIOR)
- PROVIDE CEILING MOUNTED JACK ONLY
- SURFACE MOUNTED, CFL WALL SCONCE–UNIT
- EXTERIOR SURFACE MOUNTED, CFL WALL SCONCE–UNIT BALCONY
- SURFACE MOUNTED, CFL WALL SCONCE–CORRIDOR
- SURFACE MOUNTED, CFL WALL SCONCE PUBLIC BATHROOM
- EXTERIOR SURFACE MOUNTED, CFL WALL SCONCE OR STEP LIGHT
- EXTERIOR RECESSED FIXTURE W/ DROPPED LENS
- 6" RECESSED WALLWASH
- RECESSED 2'X2' DEEP CELL FIXTURE
- RECESSED 2'X4' DEEP CELL FIXTURE
- RECESSED 2'X2' DIRECT/INDIRECT FLOURESCENT FIXTURE
- RECESSED 2'X4' DIRECT/INDIRECT FLUORESCENT FIXTURE
- SURFACE MOUNTED 2'X2' FLUORESCENT FIXTURE
- SURFACE MOUNTED 2'X4' FLUORESCENT FIXTURE
- STAGGERED FLOURESCENT COVE STRIP
- FLUORESCENT STRIP LIGHT (TYP. CROSS AX @ CORRIDOR)
- UNDER–CABINET TASK LIGHT
- VANITY FIXTURE (MOUNTED VERTICALLY ON EACH SIDE OF MIRROR)
- PENDANT FIXTURE (DECORATIVE)
- PENDANT (SURFACE/SUSPENDED) FIXTURE
- CUSTOM SIZE PENDANT– 36 DIA (SURFACE/SUSPENDED) FIXTURE IN 1ST FL FOYER
- ACCESS PANELS, LOCATE AS REQUIRED, COORDINATE WITH PLUMBING
- HARDWIRED SMOKE DETECTOR WITH BATTERY BACKUP
- SUPPLY AIR DIFFUSER, SEE MECHANICAL
- RETURN AIR DIFFUSER, SEE MECHANICAL
- EXHAUST FAN DIFFUSER, SEE MECHANICAL
- CEILING MOUNTED EXIT SIGN
- WALL MOUNTED EXIT SIGN

CP_legend.dwg

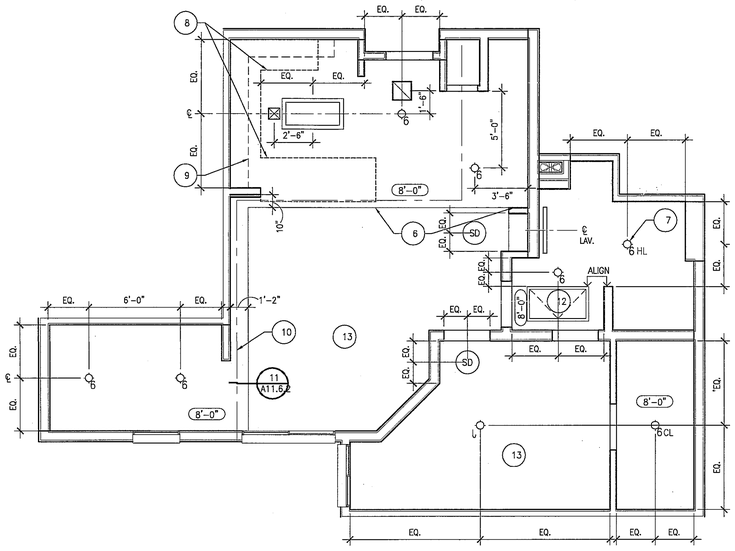

Enlarged Unit Reflected Ceiling Plan-1B-D — Scale 1/4" = 1'-0" — 13

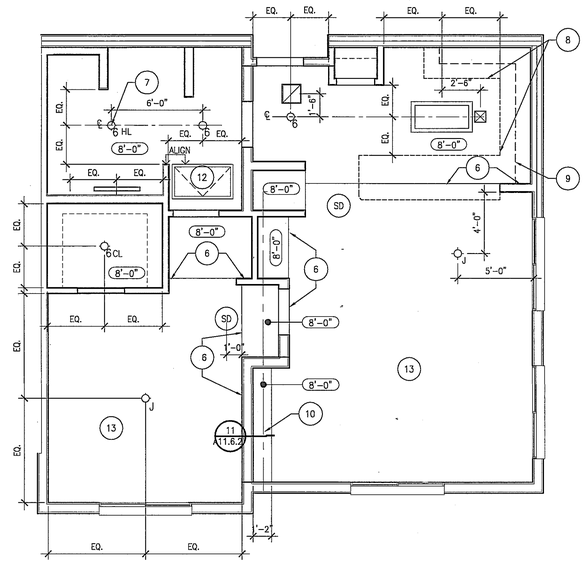

Enlarged Unit Reflected Ceiling Plan - 1B-B — Scale 1/4" = 1'-0" — 5

CEILING FINISH AND FIXTURE LEGEND — Scale NA — 1

WWC OT
Widom Wein Cohen O'Leary Terasawa

3130 Wilshire Boulevard
Sixth Floor
Santa Monica, California 90403
T (310) 828-0040
F (310) 453-9432
www.wwcot.com

Inland Empire
Palm Springs
Moorpark
Shanghai, China

RECEIVED
10:08 am, Aug 14, 2008
FRAMEMAX

Building Department Submittal: June 1, 2007
Issued For Bid: _____
Issued For Construction: _____

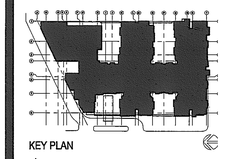

KEY PLAN

Project:
Jewish Home for The Aging
FOUNTAINVIEW AT EISENBERG VILLAGE
6440 Wilbur Ave
Reseda, CA. 91335

JEWISH HOME
JEWISH HOME FOR THE AGING
18855 Victory Blvd.
Reseda, CA 91335

Project Number: 04206.00

Enlarged Unit Reflected Ceiling Plans

Date: 04/05/2007
Drawn By: _____
Checked By: _____

A9.5.2
Sheet No.

File Path & Name: F:\PROJECTS\04206-00\A-CD\SHEETS\A9.5.2.DWG
© WWCOT 2006 May 28, 2007 - 03:57 pm

RECEIVED BY SUFFOLK ON 06/01/07

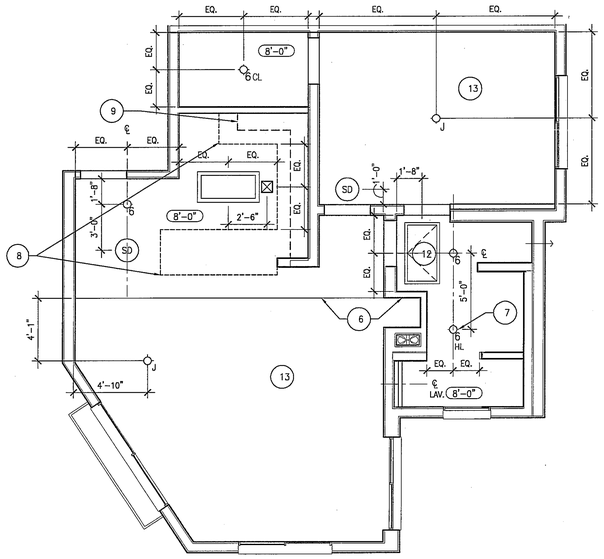

Enlarged Unit Reflected Ceiling Plan 1B-G — Scale 1/4" = 1'-0" — 5

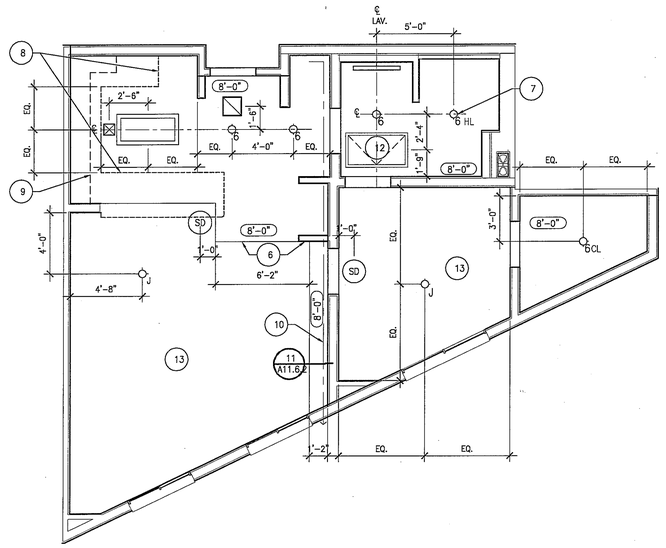

Enlarged Unit Reflected Ceiling Plan - 1B-F — Scale 1/4" = 1'-0" — 3

1. SEE UNIT PLANS A9.5.1 THROUGH A9.5.6 FOR UNIT CEILINGS.
2. SEE SHEETS A9.6.– SERIES DRAWINGS FOR TYPICAL INTERIOR AND EXTERIOR CEILING DETAILS.
3. SEE SHEETS A12– SERIES DRAWINGS FOR INTERIOR FINISHES.
4. FIXTURES ARE CENTERED IN PANELS OR ROOM, U.N.O.
5. GYP. BD. SOFFITS TO ALIGN W/ FACE OF WALL FINISH, TYP.
6. SEE SHEETS A.9.2.0, A9.2.0–A, AND A9.2.0–B FOR TYPICAL DIMENSIONS AND NOTES FOR 3RD AND 4TH FLOORS.
7. WALL MOUNTED FIXTURES TO BE MOUNTED @ 6'–0" A.F.F. U.N.O., SEE ALSO EXTERIOR AND INTERIOR ELEVATIONS
8. SEE ELECTRICAL DRAWINGS FOR FIXTURE DESIGNATION AND ADDITIONAL INFORMATION.
9. GROUP SERVICE POINTS TO MINIMIZE REQUIRED ACCESS LOCATIONS AND LOCATE ABOVE ADJACENT ACCESSIBLE CEILINGS WHERE POSSIBLE. COORDINATE WORK OF INSTALLERS AND TRADES AS REQUIRED TO ENSURE ACCESS TO SERVICE POINTS.
10. PROVIDE ADDITIONAL ACCESS PANELS AS REQUIRED WHERE VALVE CUT–OFFS, TRANSFORMERS OR OTHER EQUIPMENT/SERVICE OCCURS ABOVE HARD CEILINGS. MATCH ADJACENT CEILING/SOFFIT FINISH. SUBMIT LAYOUT OF ADDITIONAL ACCESS PANELS FOR ARCHITECT'S REVIEW.
11. PROVIDE BLOCKING, FRAMING OR OTHER SUPPORT AS REQUIRED FOR FIXTURES AND EQUIPMENT WHICH CANNOT BE SUPPORTED BY GRID SYSTEM. COORDINATE MANUFACTURER'S TEMPLATES AND INSTRUCTIONS AS REQUIRED.
12. COORDINATE ACCESS TO IN–LINE SMOKE DETECTORS TO BE ABOVE ACCESSIBLE CEILING.
13. PROVIDE TRANSFORMERS, ACCESSORIES, ETC., FOR LOW–VOLTAGE LIGHTING, AS REQUIRED FOR COMPLETE INSTALLATION.
14. OPEN AREAS INDICATED WITH PAINT NUMBER TO RECEIVE PAINT AT SURFACE ONLY. PROTECT M/E/P SYSTEMS AND EQUIPMENT FROM OVER SPRAY.
15. SEE THEATRICAL DRAWINGS FOR STAGE LIGHTING AND RIGGING INFORMATION.

CP_legend.dwg

GENERAL NOTES — Scale NA — 4

1. GYPSUM BOARD POCKET AT EXTERIOR WINDOW HEAD FOR TREATMENT/DRAPERY. SEE 1/A9.6.2.
2. EXPOSED.
3. LIGHTING AT SHELF BELOW, SEE INTERIOR ELEVATIONS.
4. STEP LIGHT, SEE INTERIOR ELEVATIONS.
5. LINEAR MECHANICAL DIFFUSER, SEE MECHANICAL DRAWINGS.
6. ALIGN.
7. HEAT LAMP, TYPICAL EACH UNIT RESTROOM.
8. LINE OF COUNTER/CABINETRY BELOW.
9. LINE OF CABINETRY ABOVE.
10. PATH OF DRYER VENT ABOVE.
11. GYPSUM BOARD SOFFIT, PAINTED PER FINISH SCHEDULE.
12. ACCESS PANEL FOR FAN COIL UNIT. COORDINATE SIZE WITH MECHANICAL DRAWINGS.
13. TWO–HOUR RATED FLOOR/CEILING ASSEMBLY G551 AS FINISHED CEILING, PAINTED PER FINISH SCHEDULE.

CP_legend.dwg

KEYNOTES — Scale NA — 3

- 2' X 2' SUSPENDED ACOUSTICAL CEILING TILE – WOOD CEILING PANELS ACT1
- 2' X 4' SUSPENDED ACOUSTICAL CEILING TILE ACT2
- 2' X 2' SUSPENDED ACOUSTICAL CEILING TILE ACT3
- 4' X 4' SUSPENDED ACOUSTICAL CEILING TILE ACT4
- 2' X 2' SUSPENDED ACOUSTICAL CEILING TILE – TRANSLUCENT PANEL ACT5
- 2' X 6' SUSPENDED ACOUSTICAL CEILING TILE ACT6
- 2' X 2' SUSPENDED ACOUSTICAL CEILING TILE ACT7
- 2' X 4' SUSPENDED ACOUSTICAL CEILING TILE ACT8
- 2' X 2' SUSPENDED ACOUSTICAL CEILING TILE – THEATER ACT9

- 4" RECESSED CFL DOWNLIGHT
- 6" RECESSED CFL DOWNLIGHT
- 6" RECESSED CFL DOWNLIGHT (WET LOCATION)
- SURFACE MOUNTED CLOSET FIXTURE
- RECSSSED HEAT LAMP
- 6" RECESSED CFL DOWNLIGHT (EXTERIOR)
- PROVIDE CEILING MOUNTED JACK ONLY
- SURFACE MOUNTED, CFL WALL SCONCE–UNIT
- EXTERIOR SURFACE MOUNTED, CFL WALL SCONCE–UNIT BALCONY
- SURFACE MOUNTED, CFL WALL SCONCE–CORRIDOR
- SURFACE MOUNTED, CFL WALL SCONCE PUBLIC BATHROOM
- EXTERIOR SURFACE MOUNTED, CFL WALL SCONCE OR STEP LIGHT
- EXTERIOR RECESSED FIXTURE W/ DROPPED LENS
- 6" RECESSED WALLWASH
- RECESSED 2'X2' DEEP CELL FIXTURE
- RECESSED 2'X4' DEEP CELL FIXTURE
- RECESSED 2'X2' DIRECT/INDIRECT FLOURESCENT FIXTURE
- RECESSED 2'X4' DIRECT/INDIRECT FLUORESCENT FIXTURE
- SURFACE MOUNTED 2'X2' FLUORESCENT FIXTURE
- SURFACE MOUNTED 2'X4' FLUORESCENT FIXTURE
- STAGGERED FLOURESCENT COVE STRIP
- FLUORESCENT STRIP LIGHT (TYP. CROSS AX @ CORRIDOR)
- UNDER–CABINET TASK LIGHT
- VANITY FIXTURE (MOUNTED VERTICALLY ON EACH SIDE OF MIRROR)
- PENDANT FIXTURE (DECORATIVE)
- PENDANT (SURFACE/SUSPENDED) FIXTURE
- CUSTOM SIZE PENDANT– 36 DIA (SURFACE/SUSPENDED) FIXTURE IN 1ST FL FOYER
- ACCESS PANELS, LOCATE AS REQUIRED. COORDINATE WITH PLUMBING
- HARDWIRED SMOKE DETECTOR WITH BATTERY BACKUP
- SUPPLY AIR DIFFUSER, SEE MECHANICAL
- RETURN AIR DIFFUSER, SEE MECHANICAL
- EXHAUST FAN DIFFUSER, SEE MECHANICAL
- CEILING MOUNTED EXIT SIGN
- WALL MOUNTED EXIT SIGN

CP_legend.dwg

CEILING FINISH AND FIXTURE LEGEND — Scale NA — 1

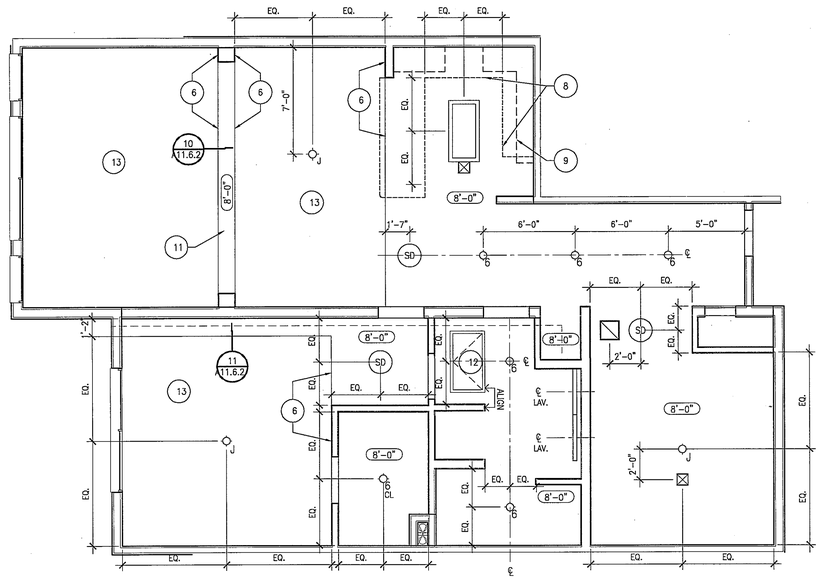

Enlarged Unit Reflected Ceiling Plan 1B-H — Scale 1/4" = 1'-0" — 4

NOT USED — Scale 1/4" = 1'-0" — 2

WWC OT
Widom Wein Cohen O'Leary Terasawa

3130 Wilshire Boulevard
Sixth Floor
Santa Monica, California 90403
T (310) 828-0040
F (310) 453-9432
www.wwcot.com

Inland Empire
Palm Springs
Moorpark
Shanghai, China

RECEIVED
10:08 am, Aug 14, 2008
FRAMEMAX

Building Department Submittal: June 1, 2007
Issued For Bid: _____
Issued For Construction: _____

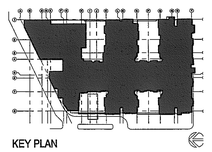

KEY PLAN

Project:
Jewish Home for The Aging
FOUNTAINVIEW AT EISENBERG VILLAGE
6440 Wilbur Ave
Reseda, CA. 91335

JEWISH HOME FOR THE AGING
18855 Victory Blvd.
Reseda, CA 91335
Project Number: 04206.00

Enlarged Unit Reflected Ceiling Plans

Date: 04/05/2007
Drawn By: _____
Checked By: _____

A9.5.3
Sheet No.

File Path & Name: F:\PROJECTS\04206-00\A-CD\SHEETS\A9.5.3.DWG
© WWCOT 2006 May 28, 2007 - 03:57 pm

RECEIVED BY SUFFOLK ON 06/01/07

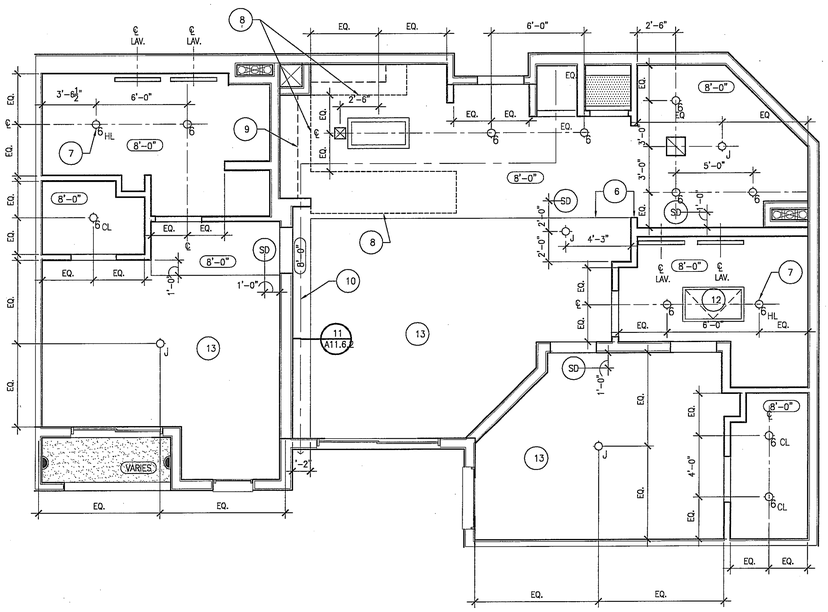

Enlarged Unit Reflected Ceiling Plan 2B-A — Scale 1/4" = 1'-0" — 5

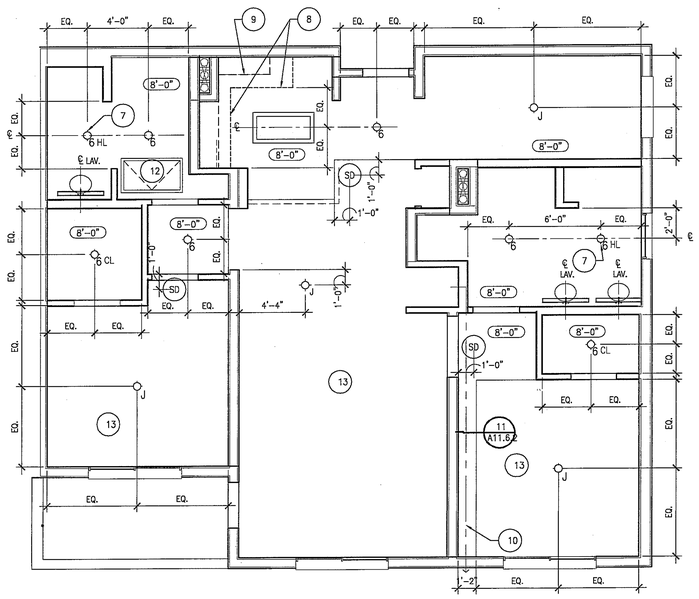

Enlarged Unit Reflected Ceiling Plan - 2B-C-1 — Scale 1/4" = 1'-0" — 3

1. SEE UNIT PLANS A9.5.1 THROUGH A9.5.6 FOR UNIT CEILINGS.
2. SEE SHEETS A9.6.– SERIES DRAWINGS FOR TYPICAL INTERIOR AND EXTERIOR CEILING DETAILS.
3. SEE SHEETS A12– SERIES DRAWINGS FOR INTERIOR FINISHES.
4. FIXTURES ARE CENTERED IN PANELS OR ROOM, U.N.O.
5. GYP. BD. SOFFITS TO ALIGN W/ FACE OF WALL FINISH, TYP.
6. SEE SHEETS A.9.2.0, A9.2.0–A, AND A9.2.0–B FOR TYPICAL DIMENSIONS AND NOTES FOR 3RD AND 4TH FLOORS.
7. WALL MOUNTED FIXTURES TO BE MOUNTED @ 6'–0" A.F.F. U.N.O., SEE ALSO 'EXTERIOR AND INTERIOR ELEVATIONS
8. SEE ELECTRICAL DRAWINGS FOR FIXTURE DESIGNATION AND ADDITIONAL INFORMATION.
9. GROUP SERVICE POINTS TO MINIMIZE REQUIRED ACCESS LOCATIONS AND LOCATE ABOVE ADJACENT ACCESSIBLE CEILINGS WHERE POSSIBLE. COORDINATE WORK OF INSTALLERS AND TRADES AS REQUIRED TO ENSURE ACCESS TO SERVICE POINTS.
10. PROVIDE ADDITIONAL ACCESS PANELS AS REQUIRED WHERE VALVE CUT–OFFS, TRANSFORMERS OR OTHER EQUIPMENT/SERVICE OCCURS ABOVE HARD CEILINGS. MATCH ADJACENT CEILING/SOFFIT FINISH. SUBMIT LAYOUT OF ADDITIONAL ACCESS PANELS FOR ARCHITECT'S REVIEW.
11. PROVIDE BLOCKING, FRAMING OR OTHER SUPPORT AS REQUIRED FOR FIXTURES AND EQUIPMENT WHICH CANNOT BE SUPPORTED BY GRID SYSTEM. COORDINATE MANUFACTURER'S TEMPLATES AND INSTRUCTIONS AS REQUIRED.
12. COORDINATE ACCESS TO IN–LINE SMOKE DETECTORS TO BE ABOVE ACCESSIBLE CEILING.
13. PROVIDE TRANSFORMERS, ACCESSORIES, ETC., FOR LOW–VOLTAGE LIGHTING, AS REQUIRED FOR COMPLETE INSTALLATION.
14. OPEN AREAS INDICATED WITH PAINT NUMBER TO RECEIVE PAINT AT SURFACE ONLY. PROTECT M/E/P SYSTEMS AND EQUIPMENT FROM OVER SPRAY.
15. SEE THEATRICAL DRAWINGS FOR STAGE LIGHTING AND RIGGING INFORMATION.

CP_legend.dwg

GENERAL NOTES — Scale NA — 4

1. GYPSUM BOARD POCKET AT EXTERIOR WINDOW HEAD FOR TREATMENT/DRAPERY. SEE 1/A9.6.2.
2. EXPOSED.
3. LIGHTING AT SHELF BELOW, SEE INTERIOR ELEVATIONS.
4. STEP LIGHT, SEE INTERIOR ELEVATIONS.
5. LINEAR MECHANICAL DIFFUSER, SEE MECHANICAL DRAWINGS.
6. ALIGN.
7. HEAT LAMP, TYPICAL EACH UNIT RESTROOM.
8. LINE OF COUNTER/CABINETRY BELOW.
9. LINE OF CABINETRY ABOVE.
10. PATH OF DRYER VENT ABOVE.
11. GYPSUM BOARD SOFFIT, PAINTED PER FINISH SCHEDULE.
12. ACCESS PANEL FOR FAN COIL UNIT. COORDINATE SIZE WITH MECHANICAL DRAWINGS.
13. TWO–HOUR RATED FLOOR/CEILING ASSEMBLY G551 AS FINISHED CEILING, PAINTED PER FINISH SCHEDULE.

CP_legend.dwg

KEYNOTES — Scale NA — 3

- 2' X 2' SUSPENDED ACOUSTICAL CEILING TILE – WOOD CEILING PANELS ACT1
- 2' X 4' SUSPENDED ACOUSTICAL CEILING TILE ACT2
- 2' X 2' SUSPENDED ACOUSTICAL CEILING TILE ACT3
- 4' X 4' SUSPENDED ACOUSTICAL CEILING TILE ACT4
- 2' X 2' SUSPENDED ACOUSTICAL CEILING TILE – TRANSLUCENT PANEL ACT5
- 2' X 6' SUSPENDED ACOUSTICAL CEILING TILE ACT6
- 2' X 2' SUSPENDED ACOUSTICAL CEILING TILE ACT7
- 2' X 4' SUSPENDED ACOUSTICAL CEILING TILE ACT8
- 2' X 2' SUSPENDED ACOUSTICAL CEILING TILE – THEATER ACT9

- 4" RECESSED CFL DOWNLIGHT
- 6" RECESSED CFL DOWNLIGHT
- 6" RECESSED CFL DOWNLIGHT (WET LOCATION)
- SURFACE MOUNTED CLOSET FIXTURE
- RECSSSED HEAT LAMP
- 6" RECESSED CFL DOWNLIGHT (EXTERIOR)
- PROVIDE CEILING MOUNTED JACK ONLY
- SURFACE MOUNTED, CFL WALL SCONCE–UNIT
- EXTERIOR SURFACE MOUNTED, CFL WALL SCONCE–UNIT BALCONY
- SURFACE MOUNTED, CFL WALL SCONCE–CORRIDOR
- SURFACE MOUNTED, CFL WALL SCONCE PUBLIC BATHROOM
- EXTERIOR SURFACE MOUNTED, CFL WALL SCONCE OR STEP LIGHT
- EXTERIOR RECESSED FIXTURE W/ DROPPED LENS
- 6" RECESSED WALLWASH
- RECESSED 2'X2' DEEP CELL FIXTURE
- RECESSED 2'X4' DEEP CELL FIXTURE
- RECESSED 2'X2' DIRECT/INDIRECT FLOURESCENT FIXTURE
- RECESSED 2'X4' DIRECT/INDIRECT FLUORESCENT FIXTURE
- SURFACE MOUNTED 2'X2' FLUORESCENT FIXTURE
- SURFACE MOUNTED 2'X4' FLUORESCENT FIXTURE
- STAGGERED FLOURESCENT COVE STRIP
- FLUORESCENT STRIP LIGHT (TYP. CROSS AX @ CORRIDOR)
- UNDER–CABINET TASK LIGHT
- VANITY FIXTURE (MOUNTED VERTICALLY ON EACH SIDE OF MIRROR)
- PENDANT FIXTURE (DECORATIVE)
- PENDANT (SURFACE/SUSPENDED) FIXTURE
- CUSTOM SIZE PENDANT– 36 DIA (SURFACE/SUSPENDED) FIXTURE IN 1ST FL FOYER
- ACCESS PANELS, LOCATE AS REQUIRED. COORDINATE WITH PLUMBING
- HARDWIRED SMOKE DETECTOR WITH BATTERY BACKUP
- SUPPLY AIR DIFFUSER, SEE MECHANICAL
- RETURN AIR DIFFUSER, SEE MECHANICAL
- EXHAUST FAN DIFFUSER, SEE MECHANICAL
- CEILING MOUNTED EXIT SIGN
- WALL MOUNTED EXIT SIGN

CP_legend.dwg

CEILING FINISH AND FIXTURE LEGEND — Scale NA — 1

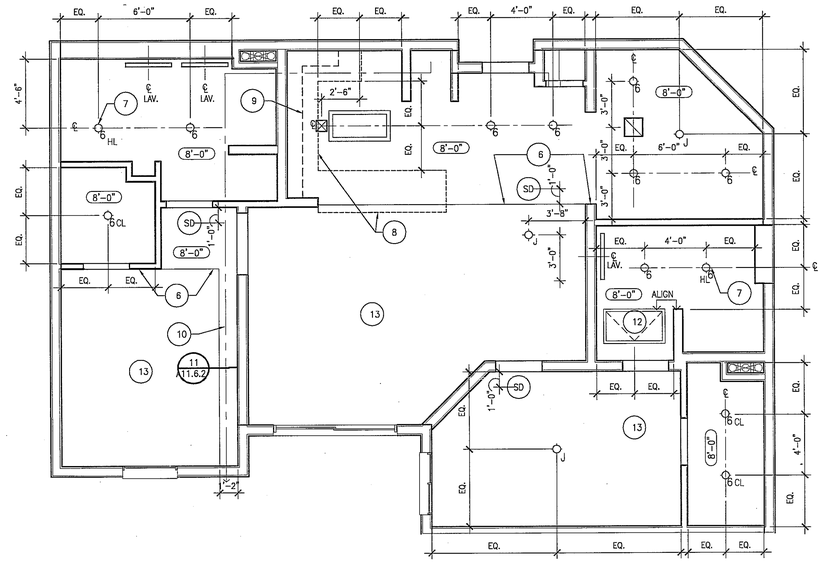

Enlarged Unit Reflected Ceiling Plan 2B-B & 2B-B-1 — Scale 1/4" = 1'-0" — 4

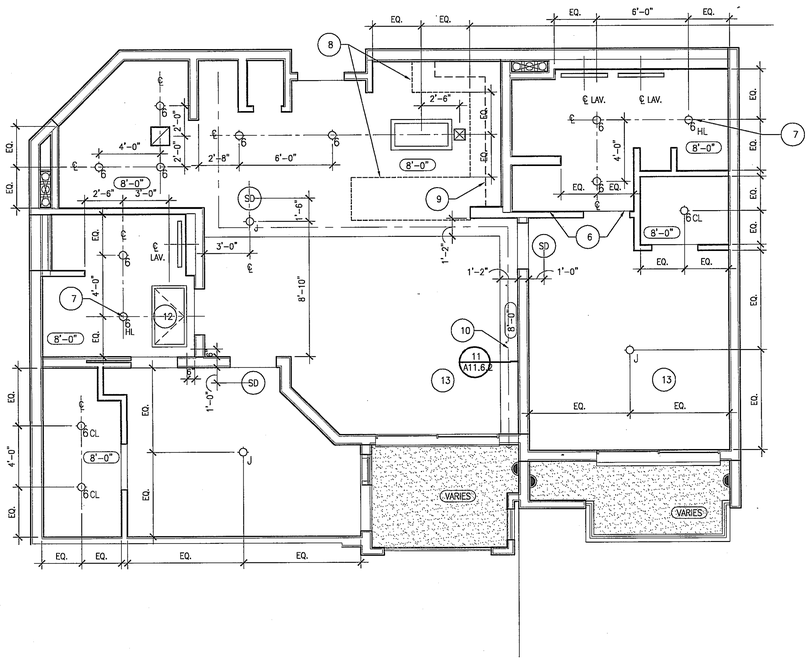

Enlarged Unit Reflected Ceiling Plan- 2B-BTOWER — Scale 1/4" = 1'-0" — 2

WWC OT
Widom Wein Cohen O'Leary Terasawa

3130 Wilshire Boulevard
Sixth Floor
Santa Monica, California 90403
T (310) 828-0040
F (310) 453-9432
www.wwcot.com

Inland Empire
Palm Springs
Moorpark
Shanghai, China

RECEIVED
10:08 am, Aug 14, 2008
FRAMEMAX

Building Department Submittal: June 1, 2007
Issued For Bid:
Issued For Construction:

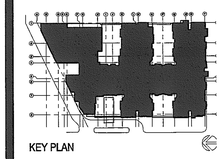

KEY PLAN

Project:
Jewish Home for The Aging
FOUNTAINVIEW AT EISENBERG VILLAGE
6440 Wilbur Ave
Reseda, CA. 91335

JEWISH HOME FOR THE AGING
18855 Victory Blvd.
Reseda, CA 91335
Project Number: 04206.00

Enlarged Unit Reflected Ceiling Plans

Date: 04/05/2007
Drawn By:
Checked By:

A9.5.4
Sheet No.

File Path & Name: F:\PROJECTS\04206.00\A-CD\SHEETS\A9.5.4.DWG
© WWCOT 2006 May 28, 2007 - 03:57 pm

RECEIVED BY SUFFOLK ON 06/01/07

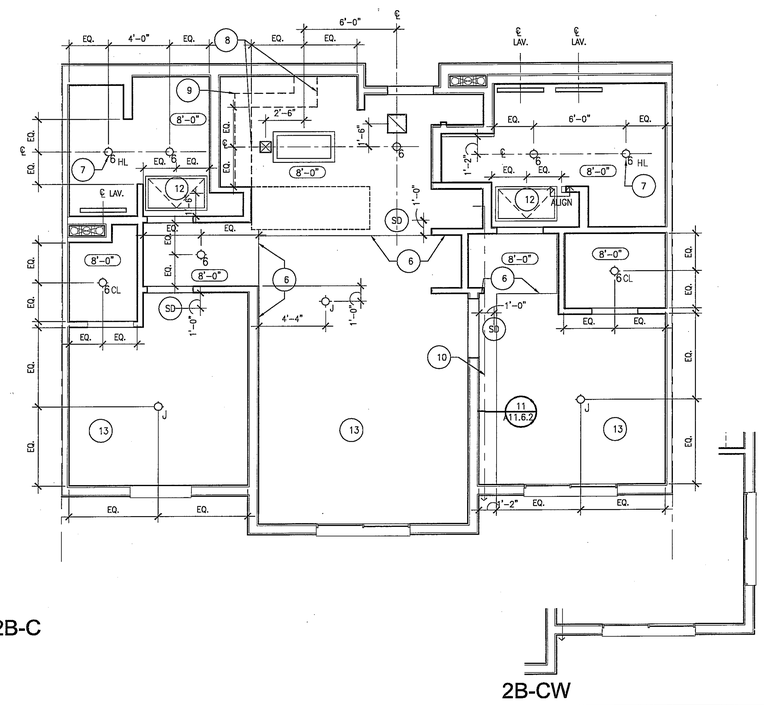

Enlarged Unit Plan 2B-C &CW — Scale 1/4" = 1'-0" — 5

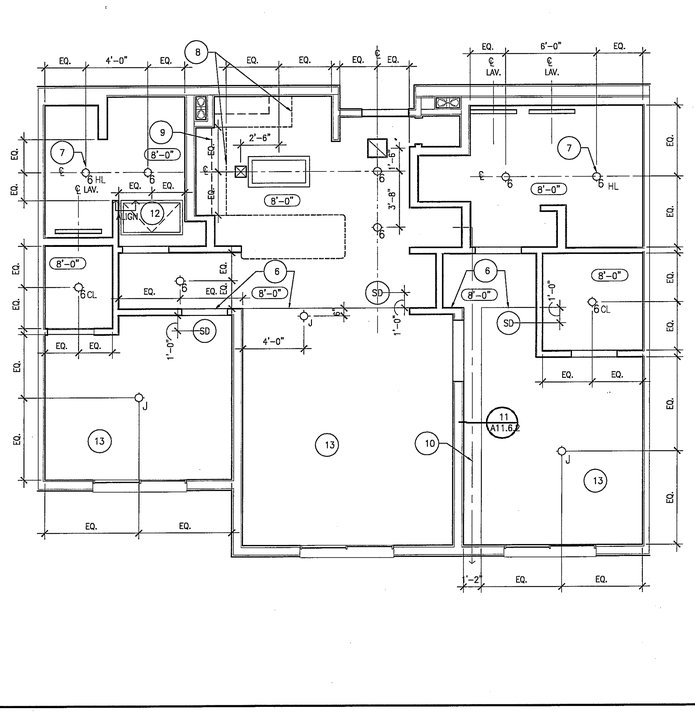

Enlarged Unit Plan - 2B-E — Scale 1/4" = 1'-0" — 3

GENERAL NOTES

1. SEE UNIT PLANS A9.5.1 THROUGH A9.5.6 FOR UNIT CEILINGS.
2. SEE SHEETS A9.6.– SERIES DRAWINGS FOR TYPICAL INTERIOR AND EXTERIOR CEILING DETAILS.
3. SEE SHEETS A12– SERIES DRAWINGS FOR INTERIOR FINISHES.
4. FIXTURES ARE CENTERED IN PANELS OR ROOM, U.N.O.
5. GYP. BD. SOFFITS TO ALIGN W/ FACE OF WALL FINISH, TYP.
6. SEE SHEETS A.9.2.0, A9.2.0–A, AND A9.2.0–B FOR TYPICAL DIMENSIONS AND NOTES FOR 3RD AND 4TH FLOORS.
7. WALL MOUNTED FIXTURES TO BE MOUNTED @ 6'–0" A.F.F. U.N.O., SEE ALSO EXTERIOR AND INTERIOR ELEVATIONS
8. SEE ELECTRICAL DRAWINGS FOR FIXTURE DESIGNATION AND ADDITIONAL INFORMATION.
9. GROUP SERVICE POINTS TO MINIMIZE REQUIRED ACCESS LOCATIONS AND LOCATE ABOVE ADJACENT ACCESSIBLE CEILINGS WHERE POSSIBLE. COORDINATE WORK OF INSTALLERS AND TRADES AS REQUIRED TO ENSURE ACCESS TO SERVICE POINTS.
10. PROVIDE ADDITIONAL ACCESS PANELS AS REQUIRED WHERE VALVE CUT–OFFS, TRANSFORMERS OR OTHER EQUIPMENT/SERVICE OCCURS ABOVE HARD CEILINGS. MATCH ADJACENT CEILING/SOFFIT FINISH. SUBMIT LAYOUT OF ADDITIONAL ACCESS PANELS FOR ARCHITECT'S REVIEW.
11. PROVIDE BLOCKING, FRAMING OR OTHER SUPPORT AS REQUIRED FOR FIXTURES AND EQUIPMENT WHICH CANNOT BE SUPPORTED BY GRID SYSTEM. COORDINATE MANUFACTURER'S TEMPLATES AND INSTRUCTIONS AS REQUIRED.
12. COORDINATE ACCESS TO IN–LINE SMOKE DETECTORS TO BE ABOVE ACCESSIBLE CEILING.
13. PROVIDE TRANSFORMERS, ACCESSORIES, ETC., FOR LOW–VOLTAGE LIGHTING, AS REQUIRED FOR COMPLETE INSTALLATION.
14. OPEN AREAS INDICATED WITH PAINT NUMBER TO RECEIVE PAINT AT SURFACE ONLY. PROTECT M/E/P SYSTEMS AND EQUIPMENT FROM OVER SPRAY.
15. SEE THEATRICAL DRAWINGS FOR STAGE LIGHTING AND RIGGING INFORMATION.

CP_legend.dwg

1	GYPSUM BOARD POCKET AT EXTERIOR WINDOW HEAD FOR TREATMENT/DRAPERY. SEE 1/A9.6.2.
2	EXPOSED.
3	LIGHTING AT SHELF BELOW, SEE INTERIOR ELEVATIONS.
4	STEP LIGHT, SEE INTERIOR ELEVATIONS.
5	LINEAR MECHANICAL DIFFUSER, SEE MECHANICAL DRAWINGS.
6	ALIGN.
7	HEAT LAMP, TYPICAL EACH UNIT RESTROOM.
8	LINE OF COUNTER/CABINETRY BELOW.
9	LINE OF CABINETRY ABOVE.
10	PATH OF DRYER VENT ABOVE.
11	GYPSUM BOARD SOFFIT, PAINTED PER FINISH SCHEDULE.
12	ACCESS PANEL FOR FAN COIL UNIT. COORDINATE SIZE WITH MECHANICAL DRAWINGS.
13	TWO–HOUR RATED FLOOR/CEILING ASSEMBLY G551 AS FINISHED CEILING, PAINTED PER FINISH SCHEDULE.

GENERAL NOTES — Scale NA — 4

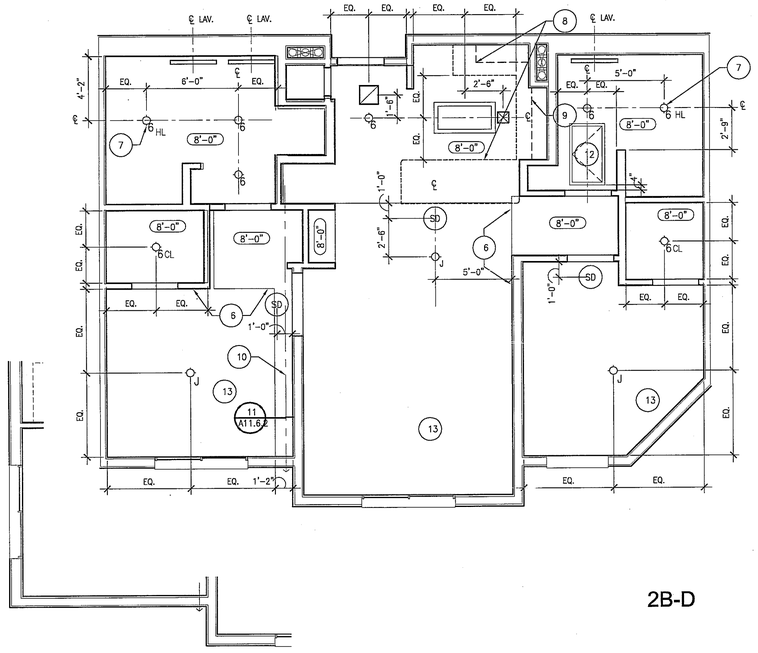

Enlarged Unit Plan 2B-D&DW — Scale 1/4" = 1'-0" — 4

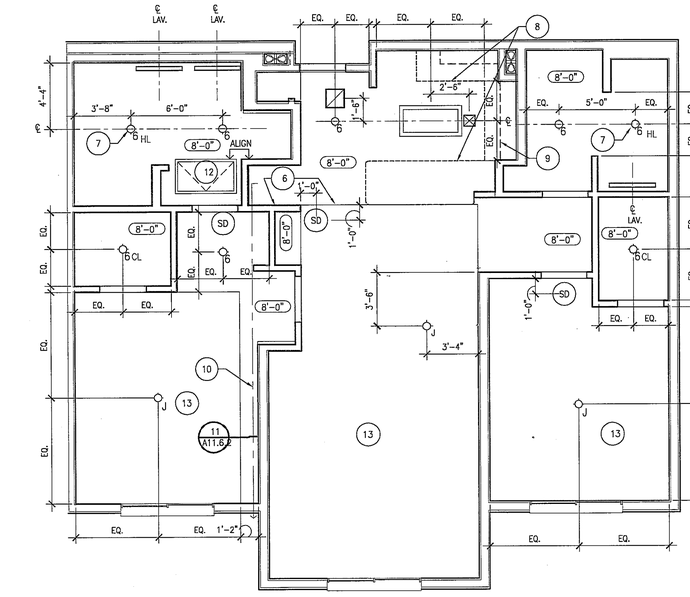

Enlarged Unit Plan-2B-F — Scale 1/4" = 1'-0" — 2

KEYNOTES

	2' X 2' SUSPENDED ACOUSTICAL CEILING TILE – WOOD CEILING PANELS ACT1
	2' X 4' SUSPENDED ACOUSTICAL CEILING TILE ACT2
	2' X 2' SUSPENDED ACOUSTICAL CEILING TILE ACT3
	4' X 4' SUSPENDED ACOUSTICAL CEILING TILE ACT4
	2' X 2' SUSPENDED ACOUSTICAL CEILING TILE – TRANSLUCENT PANEL ACT5
	2' X 6' SUSPENDED ACOUSTICAL CEILING TILE ACT6
	2' X 2' SUSPENDED ACOUSTICAL CEILING TILE ACT7
	2' X 4' SUSPENDED ACOUSTICAL CEILING TILE ACT8
	2' X 2' SUSPENDED ACOUSTICAL CEILING TILE – THEATER ACT9

4" RECESSED CFL DOWNLIGHT	STAGGERED FLOURESCENT COVE STRIP
6" RECESSED CFL DOWNLIGHT	FLUORESCENT STRIP LIGHT (TYP. CROSS AX @ CORRIDOR)
6" RECESSED CFL DOWNLIGHT (WET LOCATION)	UNDER–CABINET TASK LIGHT
SURFACE MOUNTED CLOSET FIXTURE	VANITY FIXTURE (MOUNTED VERTICALLY ON EACH SIDE OF MIRROR)
RECSSSED HEAT LAMP	
6" RECESSED CFL DOWNLIGHT (EXTERIOR)	PENDANT FIXTURE (DECORATIVE)
PROVIDE CEILING MOUNTED JACK ONLY	PENDANT (SURFACE/SUSPENDED) FIXTURE
SURFACE MOUNTED, CFL WALL SCONCE–UNIT	CUSTOM SIZE PENDANT– 36 DIA (SURFACE/SUSPENDED) FIXTURE IN 1ST FL FOYER
EXTERIOR SURFACE MOUNTED, CFL WALL SCONCE–UNIT BALCONY	ACCESS PANELS, LOCATE AS REQUIRED. COORDINATE WITH PLUMBING
SURFACE MOUNTED, CFL WALL SCONCE–CORRIDOR	HARDWIRED SMOKE DETECTOR WITH BATTERY BACKUP
SURFACE MOUNTED, CFL WALL SCONCE PUBLIC BATHROOM	SUPPLY AIR DIFFUSER, SEE MECHANICAL
EXTERIOR SURFACE MOUNTED, CFL WALL SCONCE OR STEP LIGHT	RETURN AIR DIFFUSER, SEE MECHANICAL
EXTERIOR RECESSED FIXTURE W/ DROPPED LENS	EXHAUST FAN DIFFUSER, SEE MECHANICAL
6" RECESSED WALLWASH	CEILING MOUNTED EXIT SIGN
RECESSED 2'X2' DEEP CELL FIXTURE	WALL MOUNTED EXIT SIGN
RECESSED 2'X4' DEEP CELL FIXTURE	
RECESSED 2'X2' DIRECT/INDIRECT FLOURESCENT FIXTURE	
RECESSED 2'X4' DIRECT/INDIRECT FLUORESCENT FIXTURE	
SURFACE MOUNTED 2'X2' FLUORESCENT FIXTURE	
SURFACE MOUNTED 2'X4' FLUORESCENT FIXTURE	

CP_legend.dwg

CEILING FINISH AND FIXTURE LEGEND — Scale NA — 1

WWC OT
Widom Wein Cohen O'Leary Terasawa

3130 Wilshire Boulevard
Sixth Floor
Santa Monica, California 90403
T (310) 828-0040
F (310) 453-0432
www.wwcot.com

Inland Empire
Palm Springs
Moorpark
Shanghai, China

RECEIVED
10:08 am, Aug 14, 2008
FRAMEMAX

Building Department Submittal: June 1, 2007
Issued For Bid:
Issued For Construction:

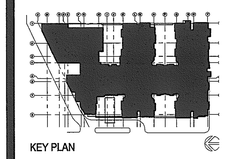

KEY PLAN

Project:
Jewish Home for The Aging
FOUNTAINVIEW AT EISENBERG VILLAGE

6440 Wilbur Ave
Reseda, CA. 91335

JEWISH HOME FOR THE AGING
18855 Victory Blvd.
Reseda, CA 91335

Project Number: 04206.00

Enlarged Unit Reflected Ceiling Plans

Date: 04/05/2007
Drawn By:
Checked By:

A9.5.5
Sheet No.

File Path & Name: F:\PROJECTS\04206.00\A-CD\SHEETS\A9.5.5.DWG
© WWCOT 2006 May 28, 2007 - 03:57 pm

RECEIVED BY SUFFOLK ON 06/01/07

1. SEE UNIT PLANS A9.5.1 THROUGH A9.5.6 FOR UNIT CEILINGS.
2. SEE SHEETS A9.6.– SERIES DRAWINGS FOR TYPICAL INTERIOR AND EXTERIOR CEILING DETAILS.
3. SEE SHEETS A12– SERIES DRAWINGS FOR INTERIOR FINISHES.
4. FIXTURES ARE CENTERED IN PANELS OR ROOM, U.N.O.
5. GYP. BD. SOFFITS TO ALIGN W/ FACE OF WALL FINISH, TYP.
6. SEE SHEETS A.9.2.0, A9.2.0–A, AND A9.2.0–B FOR TYPICAL DIMENSIONS AND NOTES FOR 3RD AND 4TH FLOORS.
7. WALL MOUNTED FIXTURES TO BE MOUNTED @ 6'–0" A.F.F. U.N.O., SEE ALSO EXTERIOR AND INTERIOR ELEVATIONS
8. SEE ELECTRICAL DRAWINGS FOR FIXTURE DESIGNATION AND ADDITIONAL INFORMATION.
9. GROUP SERVICE POINTS TO MINIMIZE REQUIRED ACCESS LOCATIONS AND LOCATE ABOVE ADJACENT ACCESSIBLE CEILINGS WHERE POSSIBLE. COORDINATE WORK OF INSTALLERS AND TRADES AS REQUIRED TO ENSURE ACCESS TO SERVICE POINTS.
10. PROVIDE ADDITIONAL ACCESS PANELS AS REQUIRED WHERE VALVE CUT–OFFS, TRANSFORMERS OR OTHER EQUIPMENT/SERVICE OCCURS ABOVE HARD CEILINGS. MATCH ADJACENT CEILING/SOFFIT FINISH. SUBMIT LAYOUT OF ADDITIONAL ACCESS PANELS FOR ARCHITECT'S REVIEW.
11. PROVIDE BLOCKING, FRAMING OR OTHER SUPPORT AS REQUIRED FOR FIXTURES AND EQUIPMENT WHICH CANNOT BE SUPPORTED BY GRID SYSTEM. COORDINATE MANUFACTURER'S TEMPLATES AND INSTRUCTIONS AS REQUIRED.
12. COORDINATE ACCESS TO IN–LINE SMOKE DETECTORS TO BE ABOVE ACCESSIBLE CEILING.
13. PROVIDE TRANSFORMERS, ACCESSORIES, ETC., FOR LOW–VOLTAGE LIGHTING, AS REQUIRED FOR COMPLETE INSTALLATION.
14. OPEN AREAS INDICATED WITH PAINT NUMBER TO RECEIVE PAINT AT SURFACE ONLY. PROTECT M/E/P SYSTEMS AND EQUIPMENT FROM OVER SPRAY.
15. SEE THEATRICAL DRAWINGS FOR STAGE LIGHTING AND RIGGING INFORMATION.

CP_legend.dwg

GENERAL NOTES

Scale NA (4)

1. GYPSUM BOARD POCKET AT EXTERIOR WINDOW HEAD FOR TREATMENT/DRAPERY. SEE 1/A9.6.2.
2. EXPOSED.
3. LIGHTING AT SHELF BELOW, SEE INTERIOR ELEVATIONS.
4. STEP LIGHT, SEE INTERIOR ELEVATIONS.
5. LINEAR MECHANICAL DIFFUSER, SEE MECHANICAL DRAWINGS.
6. ALIGN.
7. HEAT LAMP, TYPICAL EACH UNIT RESTROOM.
8. LINE OF COUNTER/CABINETRY BELOW.
9. LINE OF CABINETRY ABOVE.
10. PATH OF DRYER VENT ABOVE.
11. GYPSUM BOARD SOFFIT, PAINTED PER FINISH SCHEDULE.
12. ACCESS PANEL FOR FAN COIL UNIT. COORDINATE SIZE WITH MECHANICAL DRAWINGS.
13. TWO–HOUR RATED FLOOR/CEILING ASSEMBLY G551 AS FINISHED CEILING, PAINTED PER FINISH SCHEDULE.

CP_legend.dwg

KEYNOTES

Scale NA (3)

- ACT1 — 2' X 2' SUSPENDED ACOUSTICAL CEILING TILE – WOOD CEILING PANELS
- ACT2 — 2' X 4' SUSPENDED ACOUSTICAL CEILING TILE
- ACT3 — 2' X 2' SUSPENDED ACOUSTICAL CEILING TILE
- ACT4 — 4' X 4' SUSPENDED ACOUSTICAL CEILING TILE
- ACT5 — 2' X 2' SUSPENDED ACOUSTICAL CEILING TILE – TRANSLUCENT PANEL
- ACT6 — 2' X 6' SUSPENDED ACOUSTICAL CEILING TILE
- ACT7 — 2' X 2' SUSPENDED ACOUSTICAL CEILING TILE
- ACT8 — 2' X 4' SUSPENDED ACOUSTICAL CEILING TILE
- ACT9 — 2' X 2' SUSPENDED ACOUSTICAL CEILING TILE – THEATER

- 4" RECESSED CFL DOWNLIGHT
- 6" RECESSED CFL DOWNLIGHT
- 6" RECESSED CFL DOWNLIGHT (WET LOCATION)
- SURFACE MOUNTED CLOSET FIXTURE
- RECSSSED HEAT LAMP
- 6" RECESSED CFL DOWNLIGHT (EXTERIOR)
- PROVIDE CEILING MOUNTED JACK ONLY
- SURFACE MOUNTED, CFL WALL SCONCE–UNIT
- EXTERIOR SURFACE MOUNTED, CFL WALL SCONCE–UNIT BALCONY
- SURFACE MOUNTED, CFL WALL SCONCE–CORRIDOR
- SURFACE MOUNTED, CFL WALL SCONCE PUBLIC BATHROOM
- EXTERIOR SURFACE MOUNTED, CFL WALL SCONCE OR STEP LIGHT
- EXTERIOR RECESSED FIXTURE W/ DROPPED LENS
- 6" RECESSED WALLWASH
- RECESSED 2'X2' DEEP CELL FIXTURE
- RECESSED 2'X4' DEEP CELL FIXTURE
- RECESSED 2'X2' DIRECT/INDIRECT FLOURESCENT FIXTURE
- RECESSED 2'X4' DIRECT/INDIRECT FLUORESCENT FIXTURE
- SURFACE MOUNTED 2'X2' FLUORESCENT FIXTURE
- SURFACE MOUNTED 2'X4' FLUORESCENT FIXTURE
- STAGGERED FLOURESCENT COVE STRIP
- FLUORESCENT STRIP LIGHT (TYP. CROSS AX @ CORRIDOR)
- UNDER–CABINET TASK LIGHT
- VANITY FIXTURE (MOUNTED VERTICALLY ON EACH SIDE OF MIRROR)
- PENDANT FIXTURE (DECORATIVE)
- PENDANT (SURFACE/SUSPENDED) FIXTURE
- CUSTOM SIZE PENDANT– 36 DIA (SURFACE/SUSPENDED) FIXTURE IN 1ST FL. FOYER
- ACCESS PANELS, LOCATE AS REQUIRED, COORDINATE WITH PLUMBING
- HARDWIRED SMOKE DETECTOR WITH BATTERY BACKUP
- SUPPLY AIR DIFFUSER, SEE MECHANICAL
- RETURN AIR DIFFUSER, SEE MECHANICAL
- EXHAUST FAN DIFFUSER, SEE MECHANICAL
- CEILING MOUNTED EXIT SIGN
- WALL MOUNTED EXIT SIGN

CP_legend.dwg

CEILING FINISH AND FIXTURE LEGEND

Scale NA (1)

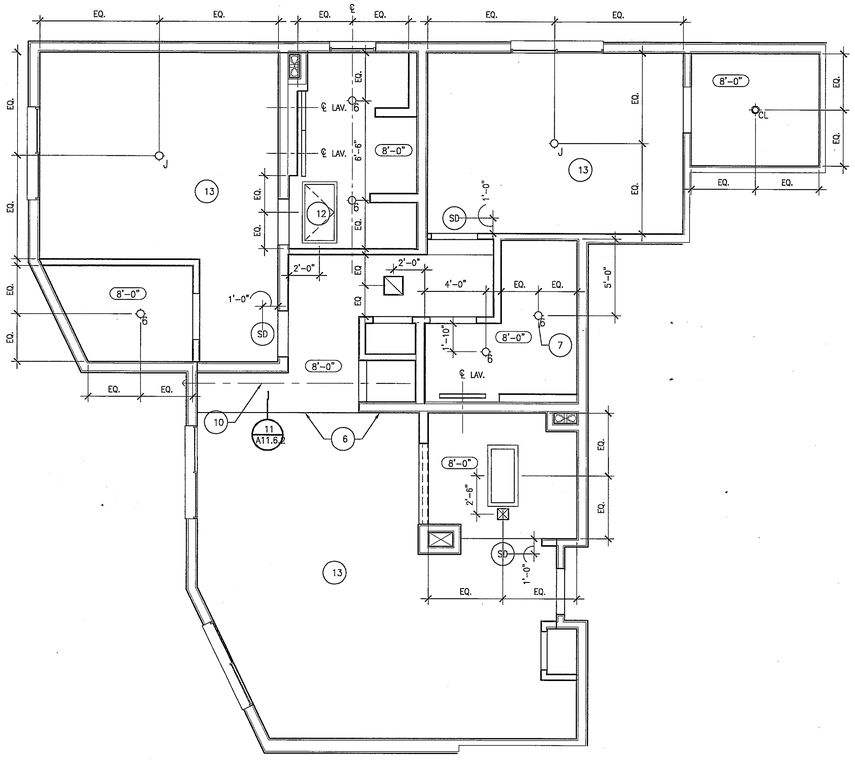

- DWG

Enlarged Unit RCP 2B-G

Scale 1/4" = 1'-0" (2)

WWCOT
Widom Wein Cohen O'Leary Terasawa

3130 Wilshire Boulevard
Sixth Floor
Santa Monica, California 90403
T (310) 828-0040
F (310) 453-9432
www.wwcot.com

Inland Empire
Palm Springs
Moorpark
Shanghai, China

RECEIVED
10:08 am, Aug 14, 2008
FRAMEMAX

Building Department Submittal: June 1, 2007
Issued For Bid: _____
Issued For Construction: _____

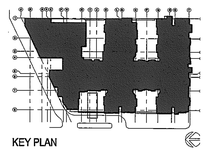

KEY PLAN

Project:
Jewish Home for The Aging
FOUNTAINVIEW AT EISENBERG VILLAGE
6440 Wilbur Ave
Reseda, CA. 91335

JEWISH HOME FOR THE AGING
18855 Victory Blvd.
Reseda, CA 91335
Project Number: 04206.00

Enlarged Unit Reflected Ceiling Plan

Date: 04/05/2007
Drawn By: _____
Checked By: _____

A9.5.6
Sheet No.

File Path & Name: F:\PROJECTS\04206-00\A-CD\SHEETS\A9.5.6.DWG
© WWCOT 2006 May 28, 2007 - 03:57 pm

RECEIVED BY SUFFOLK ON 06/01/07

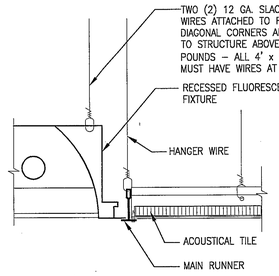

NOTE: (WITH HEAVY DUTY GRID SYSTEM ONLY) FIXTURES WEIGHING 56 POUNDS OR MORE MUST HAVE 4 TAUT 12 GA. WIRES ATTACHED TO FIXTURE AND TO STRUCT. ABOVE. PROVIDE ADDITIONAL SUPPORTS WHEN FIXTURES ARE 8' OR LONGER.

a-dt-clng-1.dwg

RECESSED FLUORSCENT LIGHT AT ACT | Scale 3" = 1'-0" | 20

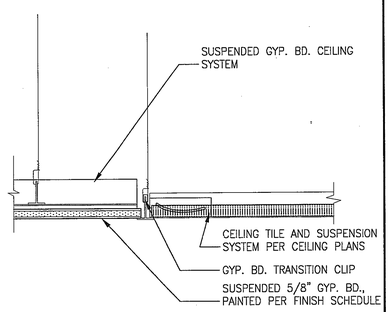

a-dt-clng-1.dwg

GYP. BD. / ACT TRANSISTION | Scale 3" = 1'-0" | 16

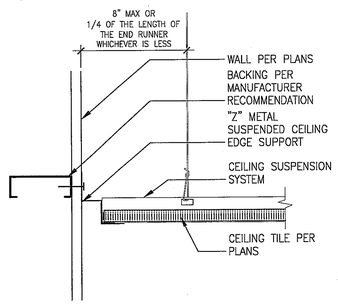

a-dt-clng-1.dwg

ACT CEILING AT PERIMETER WALL | Scale 3" = 1'-0" | 12

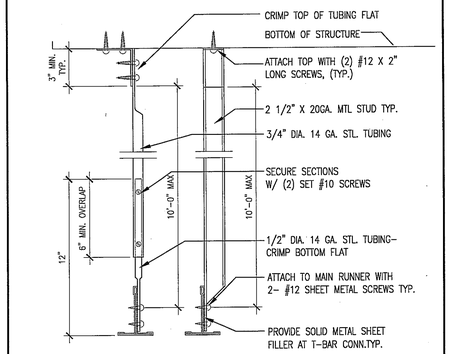

a-dt-clng-1.dwg

COMPRESSION STRUT | Scale 3" = 1'-0" | 8

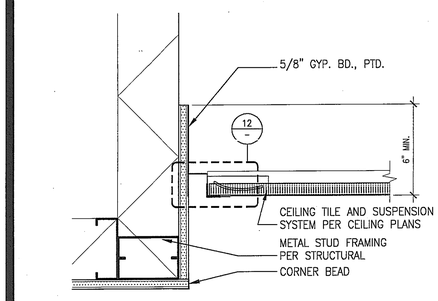

a-dt-clng-1.dwg

GYP. BD. SOFFIT AT ACT | Scale 3" = 1'-0" | 19

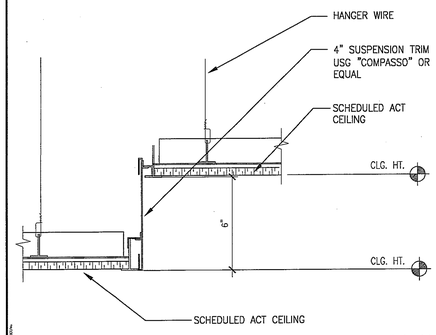

a-dt-clng-1.dwg

METAL TRIM AT ACT | Scale 3" = 1'-0" | 15

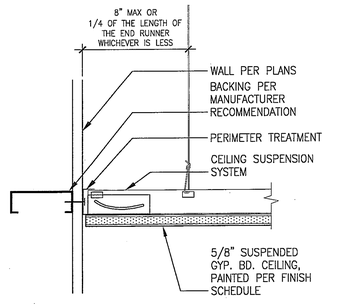

a-dt-clng-1.dwg

SUSPENEDE GYP. BD. AT PERIMETER | Scale 3" = 1'-0" | 11

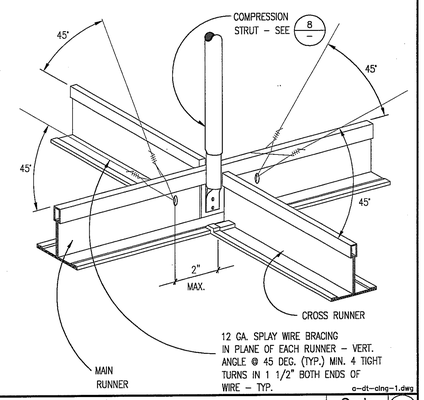

a-dt-clng-1.dwg

SPLAY WIRE CONNECTION | Scale 3" = 1'-0" | 7

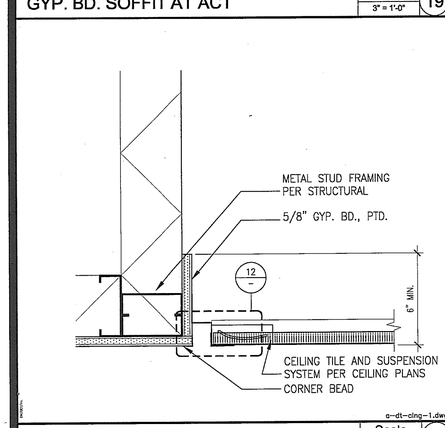

a-dt-clng-1.dwg

GYP. BD. SOFFIT AT ACT | Scale 3" = 1'-0" | 18

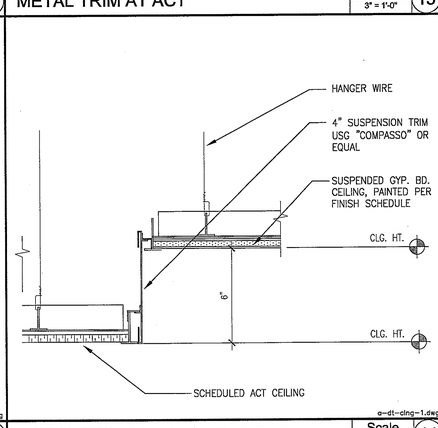

a-dt-clng-1.dwg

METAL TRIM AT ACT AND GYP. BD. | Scale | 14

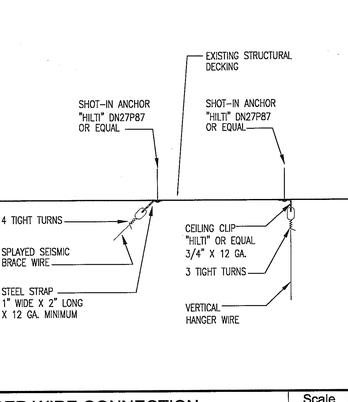

10

HANGER WIRE CONNECTION | Scale 3" = 1'-0" | 4

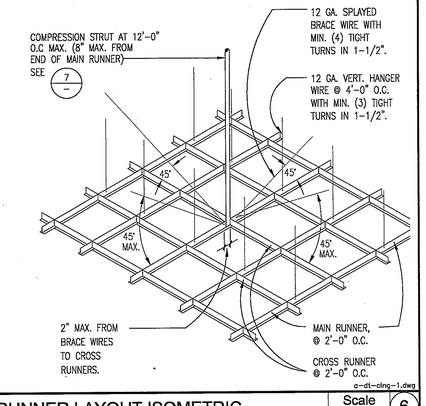

a-dt-clng-1.dwg

RUNNER LAYOUT ISOMETRIC | Scale 3" = 1'-0" | 6

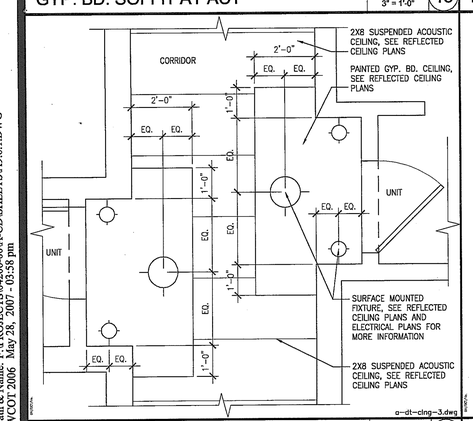

a-dt-clng-3.dwg

TYPICAL DIMENSIONS AT UNIT ENTRIES | Scale 1/2"=1'-0" | 17

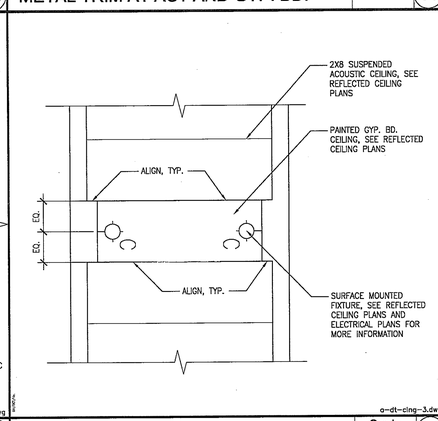

a-dt-clng-3.dwg

TYPICAL DIMENSIONS AT UNIT ENTRIES | Scale 1/2"=1'-0" | 13

NOTES:
1. LATERAL SUPPORT SHALL BE PROVIDED BY (4) WIRES (12 GA. MIN.) SPLAYED IN FOUR DIRECTIONS 90° APART, CONNECT TO MAIN RUNNER @ 2" MAX. FROM CROSS–RUNNER AND TO STRUCTURE ABOVE AT AN ANGLE NOT EXCEEDING 45° FROM PLANE OF CEILING. INSTALL LATERAL SUPPORTS @ 12'–0" INTERVALS EA. DIRECTION W/FIRST POINT @ 6'–0" MAX. FROM EA. WALL.
2. VERTICAL SUPPORT SHALL BE PROVIDED AS REQUIRED IN CHAPTER 47 UNIFORM BUILDING CODE, WITH THE ADDED REQUIREMENT THAT DISCONTINUOUS ENDS OF CROSS–RUNNERS AND MAIN RUNNERS SHALL BE VERTICALLY SUPPORTED @ 8" MAX. FROM SUCH DISCONTINUITIES WHICH OCCUR WHERE CEILING IS DISRUPTED BY A WALL.
3. PROVIDE 1 1/8" X 1 1/2" X 20 GA. ANGLE AT END OF EACH STUD TO CHANNEL WITH 2 #10 S.M.S.

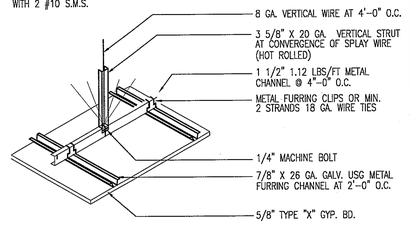

SUSPENDED GYPSUM BOARD CEILING DETAIL

a-dt-clng-1.dwg

DRYWALL CEILING FRAMING | Scale 3" = 1'-0" | 9

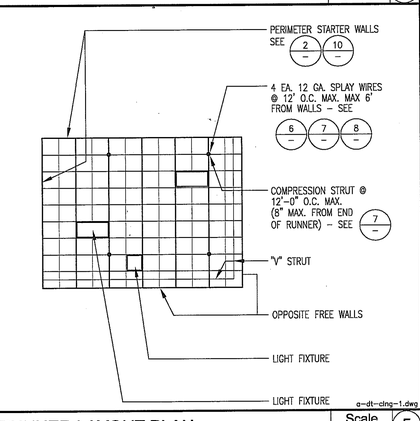

a-dt-clng-1.dwg

RUNNER LAYOUT PLAN | Scale 3" = 1'-0" | 5

1. 12 GA. (MIN.) HANGER WIRES MAY BE USED FOR UP TO AND INCLUDING 4'–0" X 4'–0" GRID SPACING ALONG MAIN RUNNERS. SPLICES WILL NOT BE PERMITTED IN ANY HANGER WIRES UNLESS SPECIFICALLY APPROVED BY BUILDING DEPT.
2. PROVIDE 12 GA. HANGER WIRES AT THE ENDS OF ALL MAIN AND CROSS RUNNERS WITHIN 8" FROM THE SUPPORT OR WITHIN 1/4 OF THE LENGTH OF THE END TEE, WHICHEVER IS LEAST, FOR THE PERIMETER OF THE CEILING AREA.
3. PROVIDE TRAPEZE OR OTHER SUPPLEMENTARY SUPPORT MEMBERS AT OBSTRUCTIONS TO MAIN HANGER SPACING. PROVIDE ADDITIONAL HANGERS, STRUTS OR BRACES AS REQUIRED AT ALL CEILING BREAKS, SOFFITS, OR DISCONTINUOUS AREAS. HANGER WIRES THAT ARE MORE THAN 1 IN 6 OUT OF PLUMB ARE TO HAVE COUNTER–SLOPING WIRES.
4. CEILING GRID MEMBERS MAY BE ATTACHED TO NOT MORE THAN 2 ADJACENT WALLS. CEILING GRID MEMBERS SHOULD BE AT LEAST 1/2 INCH FREE OF OTHER WALLS. IF WALLS RUN DIAGONALLY TO CEILING GRID SYSTEM RUNNERS, ONE END OF MAIN AND CROSS RUNNER SHOULD BE FREE AND A MINIMUM OF 1/2 INCH CLEAR OF WALL.
5. AT THE PERIMETER OF THE CEILING AREA WHERE MAIN OR CROSS RUNNERS ARE NOT CONNECTED TO THE ADJACENT WALL, PROVIDE INTERCONNECTION BETWEEN RUNNERS AT THE FREE END TO PREVENT LATERAL SPREADING. A METAL STRUT OR A 16 GA. WIRE WITH A POSITIVE MECHANICAL CONNECTION TO THE RUNNER MAY BE USED. WHERE THE PERPENDICULAR DISTANCE FROM THE WALL TO THE FIRST PARALLEL RUNNER IS 12" OR LESS, THIS INTERLOCK IS NOT REQUIRED.
6. PROVIDE SETS OF FOUR 12 GA. SPLAYED BRACING WIRES ORIENTED 90° FROM EACH OTHER AT NOT MORE THAN 12'–0" X 12'–0" ON CENTER. PROVIDE BRACING WIRES AT LOCATIONS NOT MORE THAN 6'–0" FROM EACH PERIMETER WALL AND AT THE EDGE OF VERTICAL CEILING OFFSETS. THE SLOPE OF THESE WIRES SHOULD NOT EXCEED 45° FROM THE PLANE OF THE CEILING AND SHOULD BE TAUT WITHOUT CAUSING THE CEILING TO LIFT. SPLICES IN BRACING WIRES ARE NOT TO BE PERMITTED WITHOUT SPECIAL BUILDING DEPT. APPROVAL.
7. FASTEN HANGER WIRES WITH NOT LESS THAN 3 TIGHT TURNS. FASTEN BRACING WIRES WITH 4 TIGHT TURNS. MAKE ALL TIGHT TURNS WITHIN A DISTANCE OF 1–1/2". HANGER OR BRACING WIRE ANCHORS TO THE STRUCTURE SHOULD BE INSTALLED IN SUCH A MANNER THAT THE DIRECTION OF THE WIRE ALIGNS AS CLOSELY AS POSSIBLE WITH THE DIRECTION OF THE FORCES ACTING ON THE WIRE. NOTE: WIRE TURNS MADE BY MACHINE WHERE BOTH STRANDS HAVE BEEN DEFORMED OR BENT IN WRAPPING CAN WAIVE THE 1–1/2" REQUIREMENT, BUT THE NUMBER OF TURNS SHOULD BE MAINTAINED, AND BE AS TIGHT AS POSSIBLE.
8. SEPARATE ALL CEILING HANGING AND BRACING WIRES AT LEAST 6 INCHES FROM ALL UNBRACED DUCTS, PIPES, CONDUIT, ETC. IT IS ACCEPTABLE TO ATTACH LIGHTWEIGHT ITEMS, SUCH AS SINGLE ELECTRICAL CONDUIT NOT EXCEEDING 3/4" NOMINAL DIAMETER, TO HANGER WIRES USING CONNECTORS ACCEPTABLE TO BUILDING DEPARTMENT HVAC DUCTWORK, ELECTRICAL DISTRIBUTION, TELEPHONE SERVICES, COMPUTER CABLE DISTRIBUTION, AND OTHER SERVICES NORMALLY FOUND IN A CEILING SPACE, SHALL BE INDEPENDENTLY SUPPORTED AND APPROPRIATELY BRACED TO ELIMINATE ANY LATERAL FORCE ON THE CEILING MEMBRANE OR BRACING ELEMENTS.
9. ATTACH ALL LIGHT FIXTURES TO THE CEILING GRID RUNNERS TO RESIST A HORIZONTAL FORCE EQUAL TO THE WEIGHT OF THE FIXTURES. ALL RECESSED LIGHTING FIXTURES HAVING A NOMINAL END DIMENSION OF 24" OR GREATER, SHALL BE POSITIVELY ATTACHED TO THE CEILING GRID RUNNER(S) AT THE END OF THE FIXTURE WITH TWO #8 SELF TAPPING TEK SCREWS, EACH SCREW SHALL BE LOCATED WITHIN 3" OF THE SIDE OF THE FIXTURE AND ATTACHED THROUGH THE BULB OF THE CEILING GRID RUNNER(S). LIGHT FIXTURES HAVING LESS THAN A NOMINAL 24" END DIMENSION SHALL BE ATTACHED WITH ONE #8 SELF TAPPING TEK SCREW AT THE CENTER OF EACH END OF THE FIXTURE, ATTACHED TO THE BULB OF THE CEILING GRID RUNNER(S). ALL ATTACHMENTS SHALL BE CAPABLE OF LATERALLY SUPPORTING THE WEIGHT OF THE FIXTURE. ALL FIXTURES REGARDLESS OF WEIGHT OR SIZE SHALL HAVE INTERLOCKING CEILING GRID RUNNER(S) ON ALL 4 SIDES OF THE FIXTURE.
10. CEILING–MOUNTED AIR TERMINALS OR SERVICES SHALL BE POSITIVELY ATTACHED TO THE CEILING SUSPENSION MAIN RUNNERS OR TO CROSS RUNNERS WITH THE SAME CARRYING CAPACITY AS THE MAIN RUNNER. AIR TERMINALS WITH A NOMINAL DIMENSION OF 24" OR LESS SHALL BE POSITIVELY ATTACHED TO THE CEILING GRID RUNNER(S) ON AT LEAST TWO OPPOSING SIDES WITH ONE #8 SELF TAPPING TEK SCREW ON EACH SIDE. EACH SCREW SHALL BE LOCATED IN THE CENTER OF THE AIR TERMINAL AND SHALL BE ATTACHED THROUGH THE BULB OF THE CEILING GIRD RUNNER(S). AIR TERMINALS IN EXCESS OF 24" IN LENGTH SHALL BE ATTACHED WITH TWO #8 SELF TAPPING TEK SCREWS ON EACH END OF DIFFUSER ATTACHED TO THE BULB OF THE CEILING GRID RUNNER(S). ALL ATTACHMENTS SHALL BE CAPABLE OF LATERALLY SUPPORTING THE WEIGHT OF THE AIR TERMINAL. ALL AIR TERMINALS REGARDLESS OF WEIGHT OR SIZE SHALL HAVE INTERLOCKING CEILING GRID RUNNER(S) ON ALL 4 SIDES OF THE AIR TERMINAL.
11. FLUSH OR RECESSED LIGHT FIXTURES AND AIR TERMINALS OR SERVICES WEIGHING LESS THAN 56 LBS. MAY BE SUPPORTED DIRECTLY ON THE RUNNERS OF A HEAVY DUTY GRID SYSTEM BUT, IN ADDITION, THEY MUST HAVE A MINIMUM OF TWO 12 GA. SLACK SAFETY WIRES ATTACHED TO THE FIXTURE AT DIAGONAL CORNERS AND ANCHORED TO THE STRUCTURE ABOVE. ALL 4'–0" X 4'–0" LIGHT FIXTURES MUST HAVE SLACK SAFETY WIRES AT EACH CORNER. ALL FLUSH OR RECESSED LIGHT FIXTURES AND AIR TERMINALS OR SERVICES WEIGHING 56 POUNDS OR MORE MUST BE INDEPENDENTLY SUPPORTED BY NOT LESS THAN 4 TAUT 12 GA. WIRES EACH ATTACHED TO THE FIXTURE AND TO THE STRUCTURE ABOVE REGARDLESS OF THE TYPE OF CEILING GRID SYSTEM USED. THE 4 TAUT 12 GA. WIRES INCLUDING THEIR ATTACHMENT TO THE STRUCTURE ABOVE MUST BE CAPABLE OF SUPPORTING 4 TIMES THE WEIGHT OF THE UNIT.
12. ALL FIXTURES AND AIR TERMINALS OR SERVICES SUPPORTED ON INTERMEDIATE DUTY GRID SYSTEMS MUST BE INDEPENDENTLY SUPPORTED BY NOT LESS THAN 4 TAUT 12 GA. WIRES EACH ATTACHED TO THE FIXTURE OR TERMINAL AND TO THE STRUCTURE ABOVE.
13. SUPPORT SURFACE MOUNTED LIGHT FIXTURES BY AT LEAST TWO POSITIVE DEVICES WHICH SURROUND THE CEILING RUNNER AND WHICH ARE EACH SUPPORTED FROM THE STRUCTURE ABOVE BY A 12 GA. WIRE. SPRING CLIPS OR CLAMPS THAT CONNECT ONLY TO THE RUNNER ARE NOT ACCEPTABLE. PROVIDE ADDITIONAL SUPPORTS WHEN LIGHT FIXTURES ARE 8 FEET OR LONGER.
14. SUPPORT PENDANT MOUNTED LIGHT FIXTURES DIRECTLY FROM THE STRUCTURE ABOVE WITH HANGER WIRES OR CABLES PASSING THROUGH EACH PENDANT HANGER AND CAPABLE OF SUPPORTING 4 TIMES THE WEIGHT OF THE FIXTURE. SPECIAL DETAILS ARE NECESSARY FOR THIS CONDITION AT THE CEILING GRID.
15. CLASSIFICATION OF CEILING GRID IS HEAVY DUTY. COMPONENTS SHALL COMPLY WITH THOSE SPECIFIED
16. ANCHORS FOR WALL ANGLES:
    A. AT WOOD STUD WALL: 4D COMMON NAIL @ 16" OC.
    B. AT METAL STUD WALL: 1–1/8" TYPE "S" BUGLE HEAD DRYWALL SCREW AT 16" OC.
    C. AT MASONRY WALL: 1/4" DIA. X 1–1/2" LONG TAPCON ANCHOR SCREW @ 16" OC. ICBO NO. 3370.
17. SUSPENDED CEILINGS SHALL COMPLY WITH UBC TABLES 25–A, 16–O AND 16–B.

a-dt-clng-1.dwg

SUSPENDED CEILING NOTES | Scale N.T.S. | 1

WWC OT
Widom Wein Cohen O'Leary Terasawa
3130 Wilshire Boulevard
Sixth Floor
Santa Monica, California 90403
T (310) 828-0040
F (310) 453-9432
www.wwcot.com
Inland Empire
Palm Springs
Moorpark
Shanghai, China

RECEIVED
10:08 am, Aug 14, 2008
FRAMEMAX

Building Department Submittal: June 1, 2007
Issued For Bid:
Issued For Construction:



KEY PLAN

Project:
Jewish Home for The Aging
FOUNTAINVIEW AT EISENBERG VILLAGE
6440 Wilbur Ave
Reseda, CA. 91335
JEWISH HOME FOR THE AGING
18855 Victory Blvd.
Reseda, CA 91335
Project Number: 04206.00

Ceiling Details

Date: 04/05/2007
Drawn By:
Checked By:

A9.6.1
Sheet No.

File Path & Name: F:\PROJECTS\04206.00\A-CD\SHEETS\A9.6.1.DWG
© WWCOT 2006 May 28, 2007 - 03:38 pm

RECEIVED BY SUFFOLK ON 06/01/07

NOT USED

Scale 3" = 1'-0" | 20

LINEAR DIFFUSER AT PERIMTER WALL

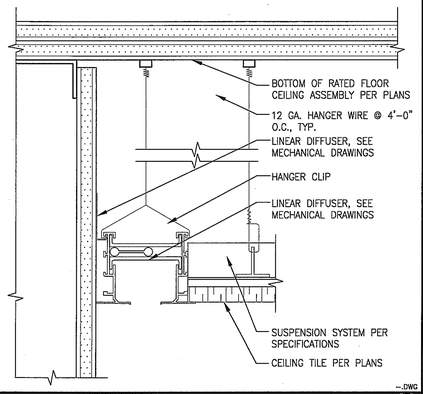

Scale 6" = 1'-0" | 16

DRYER VENT SOFFIT AT UNITS

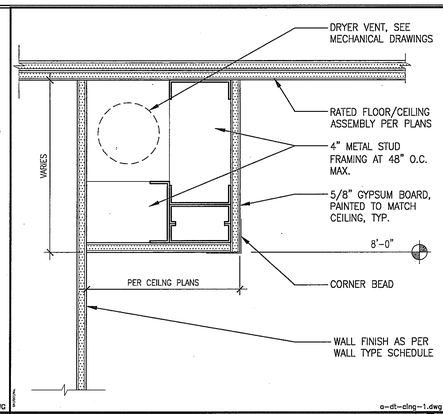

Scale 3" = 1'-0" | 11

COVE LIGHT AT TOILET ROOMS

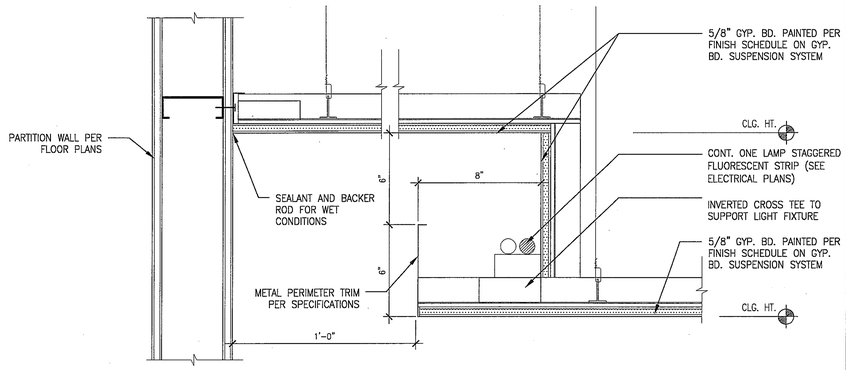

Scale 3" = 1'-0" | 4

ACCESS PANEL AT GYP. BD.

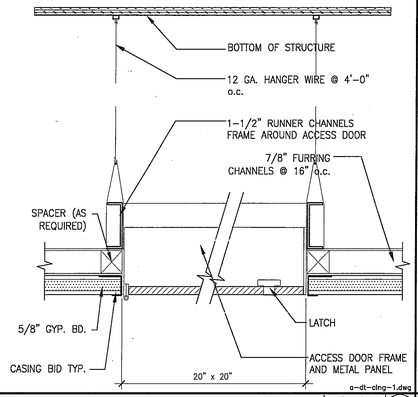

Scale 3" = 1'-0" | 19

LINEAR DIFFUSER AT PERIMTER WALL

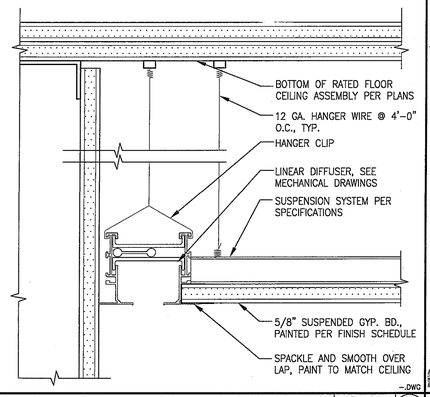

Scale 6" = 1'-0" | 15

DROPPED SOFFIT AT UNITS

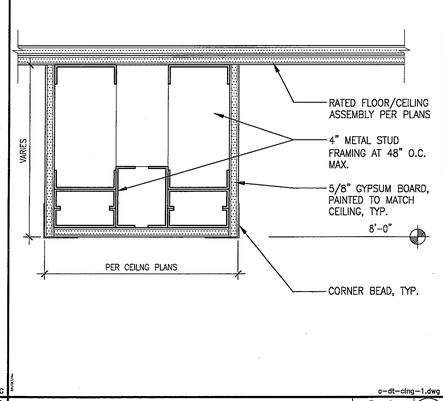

Scale 3" = 1'-0" | 10

COVE LIGHT AT ENTRY

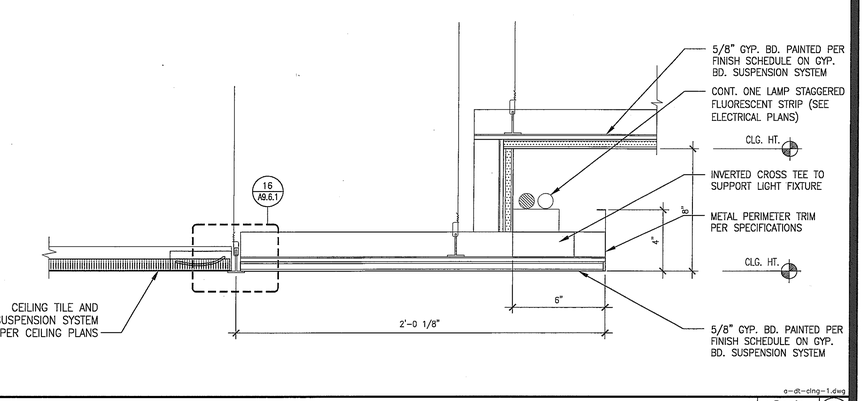

Scale 3" = 1'-0" | 3

RECESSED LIGHT IN GYP. BD.

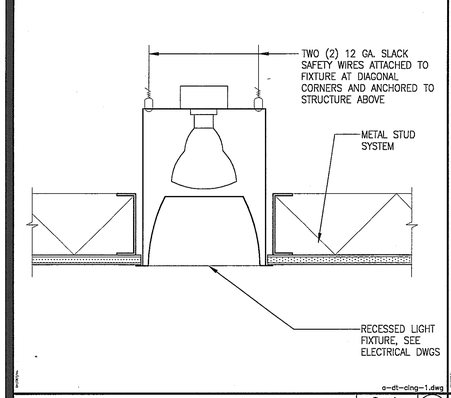

Scale 3" = 1'-0" | 18

LINEAR DIFFUSER AT ACT CEILING

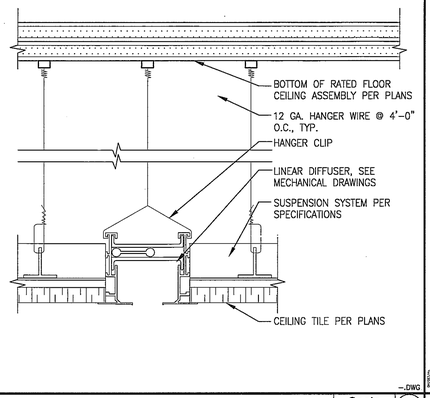

Scale 6"=1'-0" | 14

LIGHT COVE AT ACT CEILING

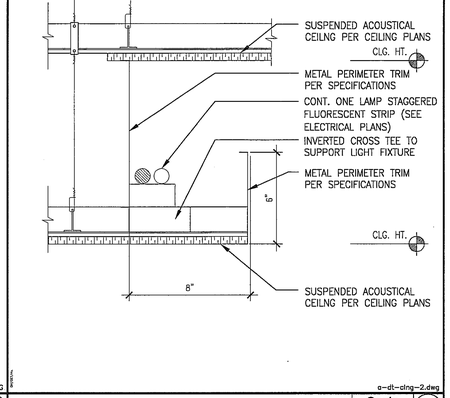

Scale 3" = 1'-0" | 9

CURTAIN POCKET AT DINING ROOM

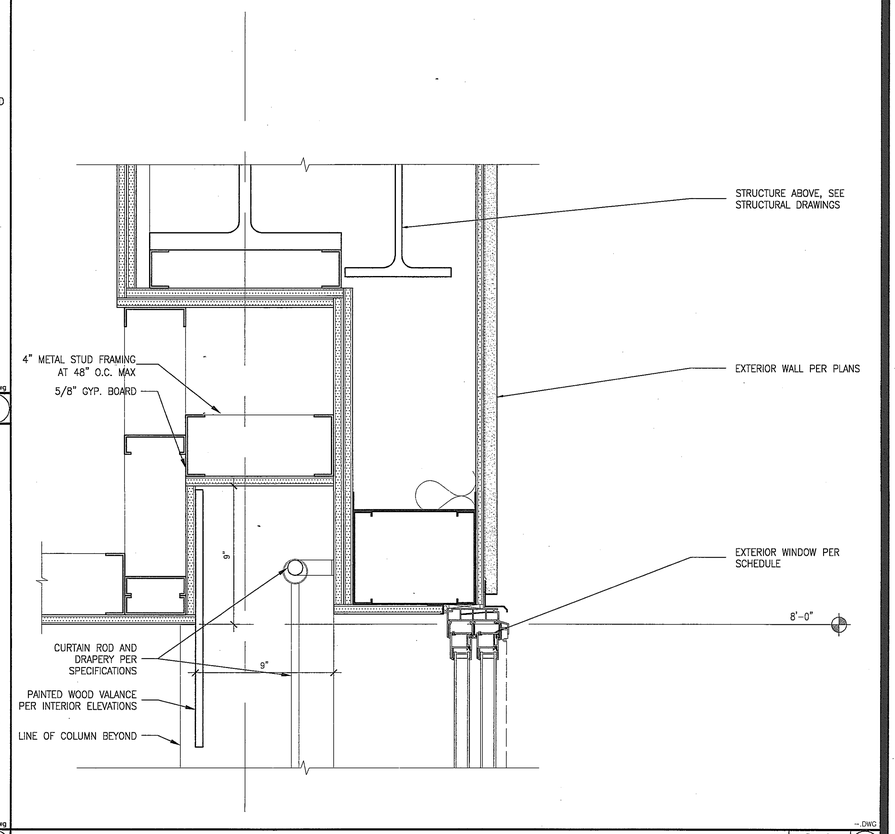

Scale X" = 1'-0" | 1

RECESSED LIGHT SUSPENDED GYP. BD.

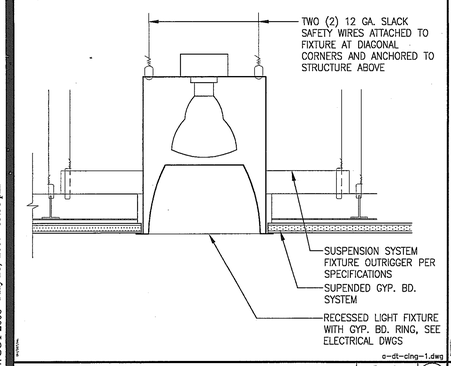

Scale 3" = 1'-0" | 17

LINEAR DIFFUSER AT GYP. BD. CEILING

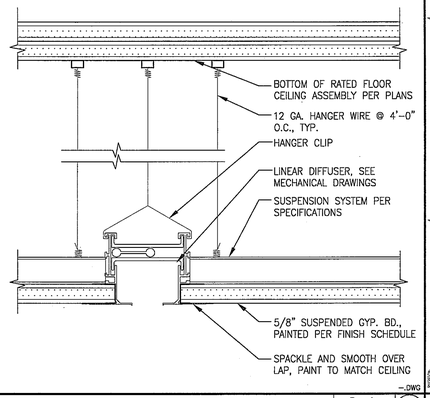

Scale 6"=1'-0" | 14

COVE LIGHT AT SPA/HAIR CARE

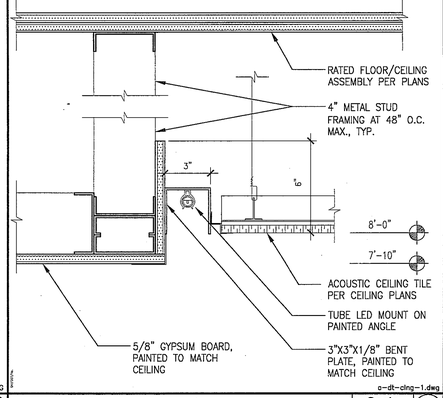

Scale 3" = 1'-0" | 8

WWC OT
Widom Wein Cohen O'Leary Terasawa

3130 Wilshire Boulevard
Sixth Floor
Santa Monica, California 90403
T (310) 828-0043
F (310) 453-9432
www.wwcot.com

Inland Empire
Palm Springs
Moorpark
Shanghai, China

RECEIVED
10:08 am, Aug 14, 2008
FRAMEMAX

Building Department Submittal: June 1, 2007
Issued For Bid:
Issued For Construction:

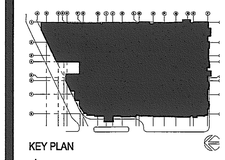

KEY PLAN

Project:
Jewish Home for The Aging
FOUNTAINVIEW AT EISENBERG VILLAGE
6440 Wilbur Ave
Reseda, CA. 91335

JEWISH HOME FOR THE AGING
18855 Victory Blvd.
Reseda, CA 91335
Project Number: 04206.00

Ceiling Details

Date: 04/05/2007
Drawn By:
Checked By:

A9.6.2
Sheet No.

File Path & Name: F:\PROJECTS\04206.00\A-CD SHEETS\A9.6.2.DWG
© WWCOT 2006 May 28, 2007 03:55 pm

RECEIVED BY SUFFOLK ON 06/01/07

WWC OT
Widom Wein Cohen O'Leary Terasawa

3130 Wilshire Boulevard
Sixth Floor
Santa Monica, California 90403
T (310) 828-0040
F (310) 453-9432
www.wwcot.com

Inland Empire
Palm Springs
Moorpark
Shanghai, China

RECEIVED
10:08 am, Aug 14, 2008
FRAMEMAX

Building Department Submittal: June 1, 2007
Issued For Bid: _____
Issued For Construction: _____

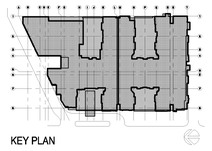

KEY PLAN

1 _____
2 _____
3 _____

Project:
Jewish Home for The Aging
FOUNTAINVIEW AT EISENBERG VILLAGE
6440 Wilbur Ave
Reseda, CA. 91335

JEWISH HOME
JEWISH HOME FOR THE AGING
18855 Victory Blvd.
Reseda, CA 91335

Project Number: 04206.00

Ceiling Details

Date: 04/05/2007
Drawn By: _____
Checked By: _____

A9.6.3
Sheet No.

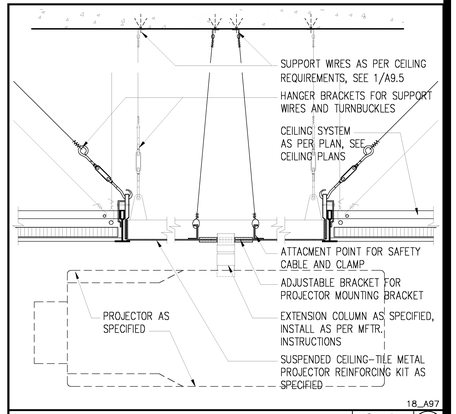

PROJECTOR CEILING SUPPORT — Scale 3"=1'-0" — 1

File Path & Name: F:\PROJECTS\04206-00\A-CD\SHEETS\A9.6.3.DWG
© WWCOT 2006 Dec 21, 2007 - 07:02 pm

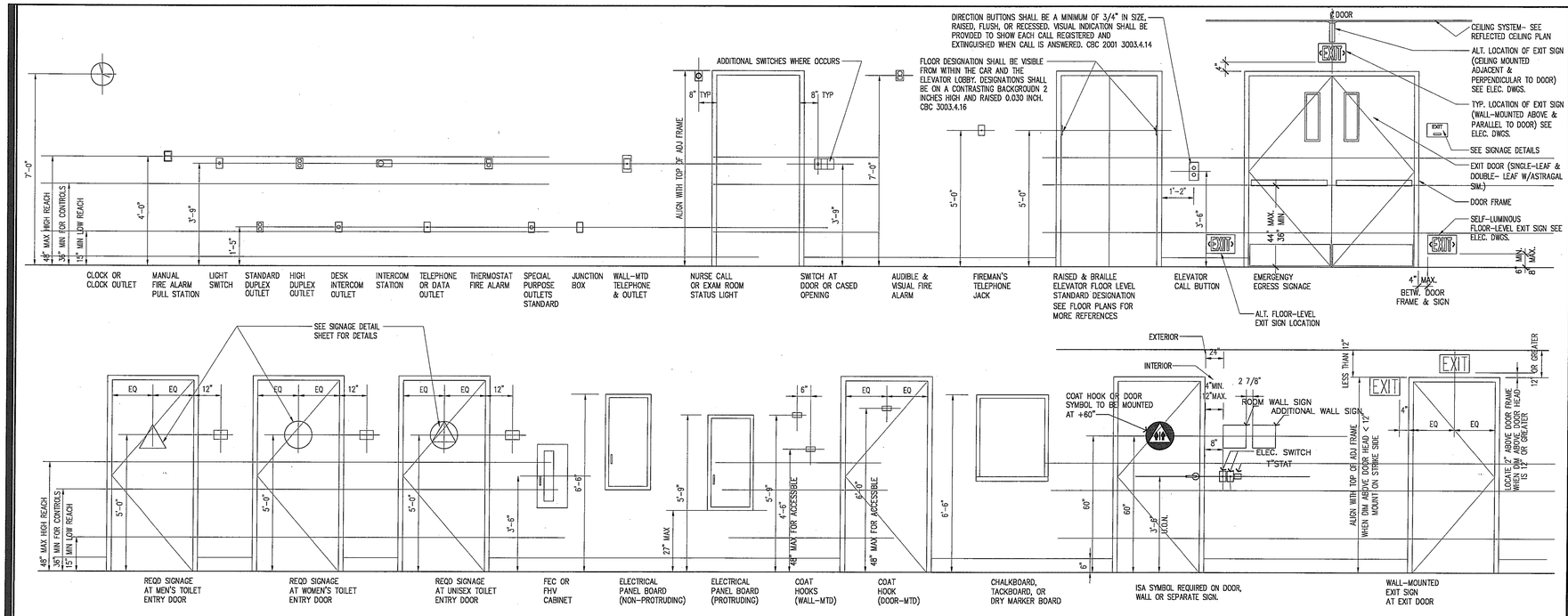

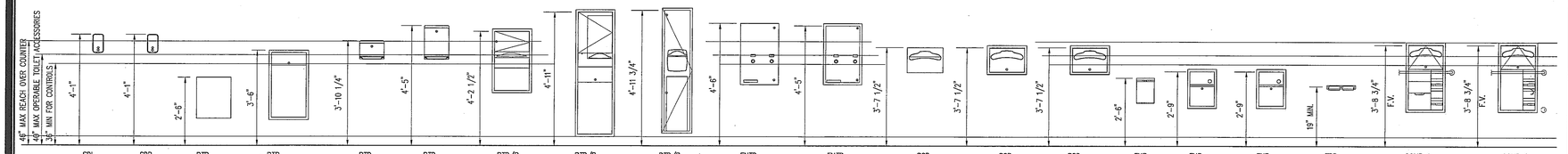

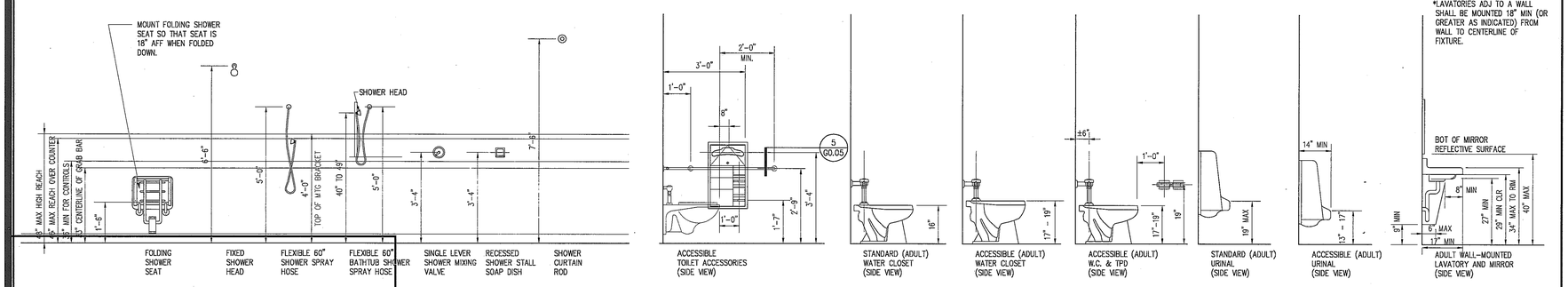

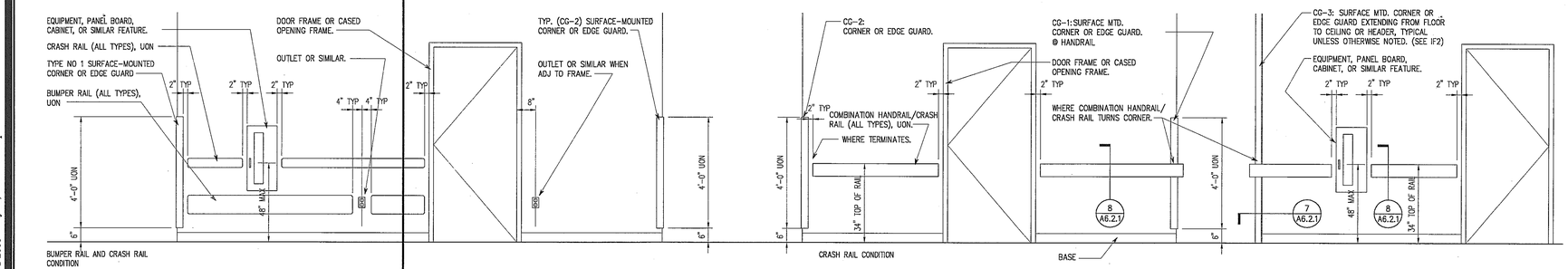

1. IT IS THE INTENT OF THE DESIGN THAT ALL ITEMS SHOWN MOUNTED AT TYPICAL HEIGHTS BE ACCESSIBLE TO PERSONS WITH DISABILITIES.

2. THE PURPOSE OF THIS SHEET IS TO ILLUSTRATE TYPICAL MOUNTING HEIGHTS AND, WHERE APPLICABLE, TYPICAL MINIMUM OR MAXIMUM CLEARANCES, AND/OR TYPICAL MOUNTING CONFIGURATIONS FOR A VARIETY OF ITEMS. ATTENTION: THIS SHEET MAY ILLUSTRATE ITEMS OR CONFIGURATIONS WHICH DO NOT OCCUR AS PART OF THE WORK OF THIS PROJECT. REFER TO THE PLANS, ELEVATIONS, SECTIONS, DETAILS, AND SCHEDULES TO DETERMINE WHICH ITEMS AND CONFIGURATIONS APPLY TO THE WORK OF THIS PROJECT.

3. THE HEIGHTS, CLEARANCES, AND CONFIGURATIONS SHOWN ON THIS SHEET ARE TYPICAL AND SHALL APPLY TO ALL INSTANCES OF THE ITEM (OR GROUP OF ITEMS) SHOWN UNLESS SPECIFICALLY NOTED OR DIMENSIONED OTHERWISE. THE TYPICAL DIMENSIONS SHOWN ON THIS SHEET TAKE PRECEDENCE OVER TYPICAL DIMENSIONS SHOWN ON THE ELECTRICAL OR MECHANICAL DRAWINGS FOR THE MOUNTING OF ITEMS INSTALLED BY THE ELECTRICAL OR MECHANICAL TRADES.

4. SPEGIAL OR NON-TYPICAL MOUNTING HEIGHTS OCCUR ONLY WHERE INDICATED BY ANNOTATED SYMBOLS; BY KEY NOTES; BY NOTES ON PLANS, ELEVATIONS, OR DETAILS; OR BY UNIQUE DIMENSIONS ON ELEVATIONS OR DETAILS.

5. FOR ADDL INFORMATION REGARDING THE PRECEDENCE OF DRAWINGS FOR DETERMINING THE EXACT LOCATION OF EACH EXPOSED PART OF THE WORK, REFER TO THE "ARCHITECTURAL GENERAL NOTES" AND TO THE "TYP RULES FOR DETERMINING MOUNTING HEIGHTS AND LOCATIONS" – SEE THE INDEX OF DRAWINGS FOR SHEET NUMBERS.

6. TYPICAL MOUNTING HEIGHTS FOR ADDITIONAL ITEMS NOT SHOWN ON THIS SHEET MAY BE ILLUSTRATED BY OTHER SHEETS. REFER TO THE INDEX OF DRAWINGS FOR ADDITIONAL INFORMATION.

7. MOUNTING CONFIGURATION DIAGRAMS ARE ELEVATIONS WHICH ILLUSTRATE TYPICAL RULES GOVERNING THE RELATIONSHIPS BETWEEN, AND PLACEMENT OF, ITEMS WHICH OCCUR IN GROUPS OF RELATED ITEMS (SUCH AS TOILET ACCESSORIES) OR IN CLOSE PROXIMITY TO OTHER PARTS OF THE WORK (SUCH AS SWITCHES AND DOOR FRAMES). UNLESS OTHER MOUNTING CONFIGURATIONS ARE SPECIFICALLY NOTED, DIMENSIONED, OR ELEVATED, THE TYPICAL RELATIONSHIPS, ARRANGEMENTS, AND DIMENSIONS SHOWN BY THE TYPICAL CONFIGURATION DIAGRAMS APPLY THROUGHOUT THE WORK OF THIS PROJECT.

8. TYPICAL MOUNTING CONFIGURATIONS FOR ADDITIONAL GROUPINGS NOT SHOWN ON THIS SHEET MAY BE SHOWN ON OTHER SHEETS. REFER TO THE INDEX OF DRAWINGS FOR ADDITIONAL INFORMATION.

9. MOUNTING HEIGHTS, DIMENSIONS, CLEARANCES, AND ACCESS REQUIREMENTS FOR TOILET ACCESSORIES SHOWN ON THIS SHEET ARE BASED UPON SPECIFIC MANUFACTURERS AND MODELS AS INDICATED BY THE "TOILET ACCESSORY SCHEDULE." WHEN SIMILAR ACCESSORIES OF OTHER SPECIFIED AND ACCEPTABLE MANUFACTURERS (IF ANY) ARE UTILIZED, MOUNTING HEIGHTS, DIMENSIONS, CLEARANCES, AND ACCESS REQUIREMENTS OF THE SIMILAR ACCESSORIES MAY VARY FROM THOSE SHOWN. WHEN SIMILAR ACCESSORIES ARE UTILIZED, THE CONTRACTOR SHALL BE RESPONSIBLE FOR ALL COORDINATION REQUIRED TO ACHIEVE THE SAME AESTHETIC AND FUNCTIONAL DESIGN INTENT ILLUSTRATED BY THAT SHOWN ON THE DRAWINGS.

10. FOR ADA SIGNAGE, REFER TO SHEET A1.4.1

11. SEE SHEET 3/A7.2.1, 3/A7.2.2 AND 3/A7.2.3 FOR TOILET ACCESSORY SCHEDULE.

NOTE:

THIS SHEET MAY ILLUSTRATE ITEMS OR CONFIGURATIONS WHICH DO NOT OCCUR AS PART OF THE WORK OF THIS PROJECT. REFER TO THE PLANS, ELEVATIONS, SECTIONS, DETAILS, AND SCHEDULES TO DETERMINE WHICH ITEMS AND CONFIGURATIONS APPLY TO THE WORK OF THIS PROJECT.

WWC OT
Widom Wein Cohen O'Leary Terasawa
3130 Wilshire Boulevard
Sixth Floor
Santa Monica, California 90403
T (310) 828-0040
F (310) 453-9432
www.wwcot.com
Inland Empire
Palm Springs
Moorpark
Shanghai, China

RECEIVED
10:08 am, Aug 14, 2008
FRAMEMAX

Building Department Submittal: June 1, 2007
Issued For Bid: _____
Issued For Construction: _____

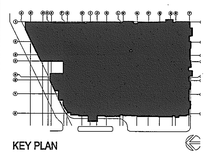

KEY PLAN

Project:
Jewish Home for The Aging
FOUNTAINVIEW AT EISENBERG VILLAGE
6440 Wilbur Ave
Reseda, CA. 91335
JEWISH HOME
JEWISH HOME FOR THE AGING
18855 Victory Blvd.
Reseda, CA 91335
Project Number: 04206.00

Typical Mounting Heights

Date: 04/05/2007
Drawn By: _____
Checked By: _____

A10.1.0
Sheet No.

Typical Mounting Heights | Scale X" = 1'-0" | -

General Notes | Scale 1/2"=1'-0" | 5

General Notes | Scale | 1

File Path & Name: F:\PROJECTS\04206-00\A-CD\SHEETS\A10-1-0.DWG
© WWCOT 2006 May 28, 2007 - 03:58 pm

RECEIVED BY SUFFOLK ON 06/01/07

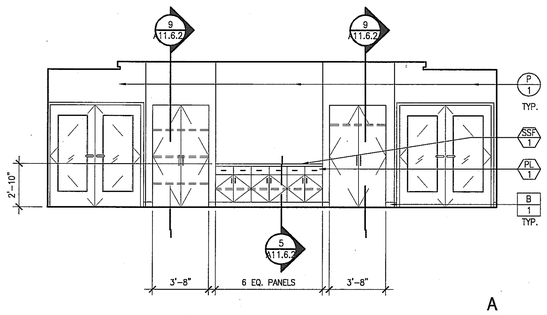

A

PRIVATE DINING/ CARDS ROOM 134 | Scale 1/4" = 1'-0" | 16

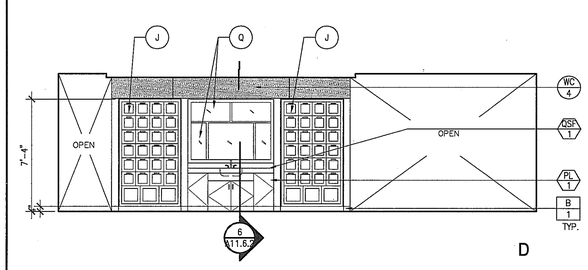

D

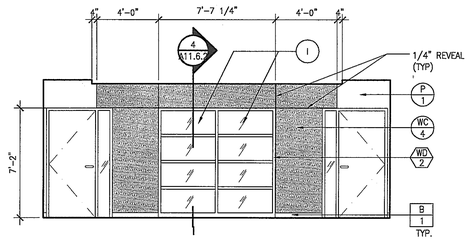

B

CARDS/BILLIARDS ROOM 140 | Scale 1/4" = 1'-0" | 8

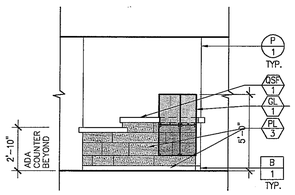

B

LOUNGE BAR ROOM 139 | Scale 1/4" = 1'-0" | 19

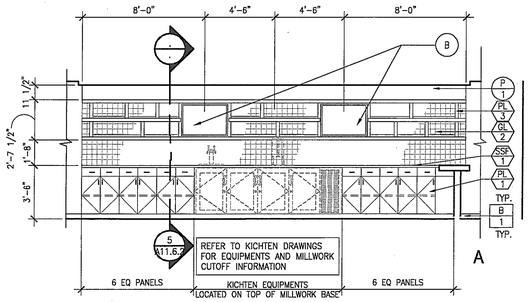

A

LOUNGE BAR ROOM 139 | Scale 1/4" = 1'-0" | 11

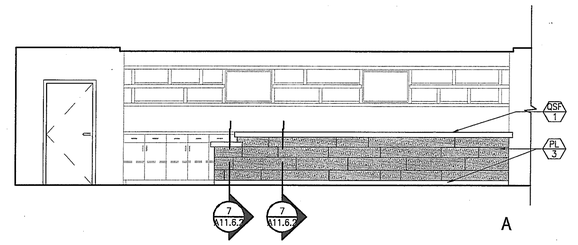

A

LOUNGE BAR ROOM 139 | Scale 1/4" = 1'-0" | 7

1. REFER TO SPECIFICATION BOOK, SECTION 09000: COLORS & MATERIALS FOR ALL SCHEDULED INTERIOR FINISHES.
2. REFER TO FINISH PLAN #A12 SERIES FOR FINISH LEGEND & MATERIAL.
3. REFER TO REFLECTED CEILING PLANS FOR CEILING HEIGHTS.
4. TYP. CORRIDOR TO HAVE WALLCOVERING (WC1) UPTO 31" A.F.F. THROUGHOUT U.O.N.; PROVIDE & INSTALL HANDRAIL (HR1) ON ONE SIDE OF CORRIDOR AND JUST WALLCOVERING WAINSCOT ON THE OTHER SIDE (ALTERNATE PRICING: PROVIDE PRICING FOR MINIMUM EDGE TRIM FOR WALLCOVERING WAINSCOT.)

KEYNOTES:

1. HANDRAIL – G.C. TO PROVIDE BACKING
2. PROVIDE J-MOLD (WPR1) @ WAINSCOT WALLCOVERING
3. PROVIDE MOTORIZED CEILING TRACK DRAPERY (WT-T) AT SCREEN.

a-lg-int-elev.dwg

General Notes | Scale NA | 2

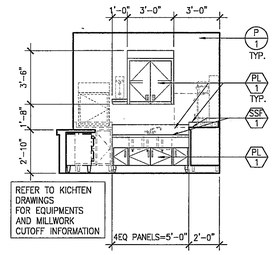

D

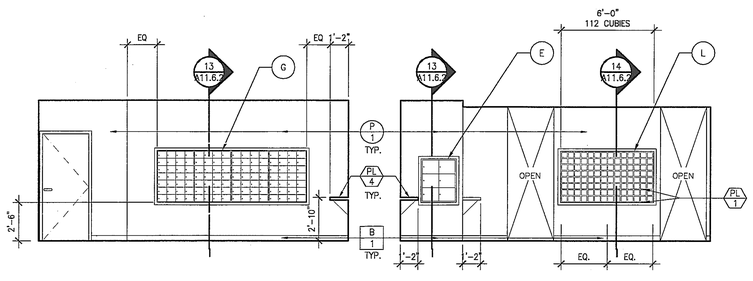

D B

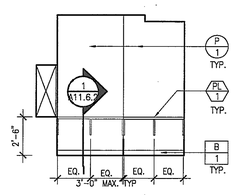

A

COFFEE BAR ROOM 128 | Scale 1/4" = 1'-0" | 14 MAIL ROOM 127 | Scale 1/4" = 1'-0" | 6

INTERIOR ELEVATION & EQUIPMENT SCHEDULE

SYMBOL	ITEM DESCRIPTION	REMARKS
A	FIREPLACE PER STRUCTURAL	
B	LCD TV (SIZE: 37")	OWNER PROVIDED
C	PAINTED WOOD VALANCE (P7)	GC TO PROVIDE AND INSTALL
D	VANITY LIGHT PER SCHEDULE	GC TO PROVIDE AND INSTALL
E	PREFABRICATED METAL PACKAGE BOXES (QUANTITIES: 6)	GC TO PROVIDE AND INSTALL
F	VENDING MACHINE	OWNER PROVIDED
G	PREFABRICATED METAL MAILSLOTS (QUANTITIES: 4x28=112)	GC TO PROVIDE AND INSTALL
H	HOT DOG MACHINE	OWNER PROVIDED
I	WOOD-FRAMED GLASS SCREEN (FIRE-RATED GLASS WITH WINDOW FILM INSIDE, WT-1)	GC TO PROVIDE AND INSTALL
J J1	LOCKABLE WINE/LIQUOR STORAGE BY OTHERS FIXED DOOR PANEL BY GC TO MATCH WINE/LIQUOR STORAGE	GC TO PROVIDE AND INSTALL
K	BARRE	GC TO PROVIDE AND INSTALL
L	CUBIES (QUANTITIES: 112)	GC TO PROVIDE AND INSTALL
M	POPCORN MACHINE	OWNER PROVIDED
N	DRAPERY WING ON ROD	
P	THEATER SCREEN	
Q	FRAMED ART MIRROR	GC TO PROVIDE AND INSTALL
R	FRAMELESS MIRROR (SEE INTERIOR ELEVATION AND PLAN FOR THE SIZE)	GC TO PROVIDE AND INSTALL
S	WALL MOUNTED 13" LCD SCREEN ON AN ADJUSTABLE ARM	
T	RECESSED SPEAKER BY OTHERS	
U	RECESSED MEDIA CABINET BY OTHERS	
V	MARLITE WALL PANEL SYSTEM	
W	REFRIGERATOR	

REFER TO SPECIFICATIONS FOR SCHEDULED FIXTURE & EQUIPMENT

a-lg-int.dwg

Interior Elevations Legend | Scale 1/4" = 1'-0" | 1

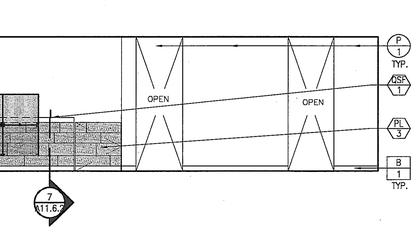

D

COFFEE BAR ROOM 128 | Scale 1/4" = 1'-0" | 13

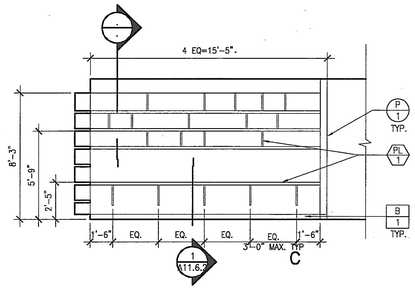

C

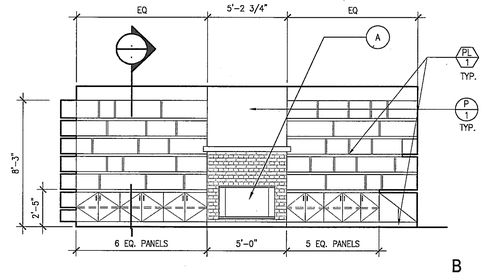

B

LIBRARY 132 | Scale 1/4" = 1'-0" | 6

WWC OT
Widom Wein Cohen O'Leary Terasawa

3130 Wilshire Boulevard
Sixth Floor
Santa Monica, California 90403
T (310) 828-0040
F (310) 453-9432
www.wwcot.com

Inland Empire
Palm Springs
Moorpark
Shanghai, China

RECEIVED
10:08 am, Aug 14, 2008
FRAMEMAX

Building Department Submittal: June 1, 2007
Issued For Bid: _____
Issued For Construction: _____

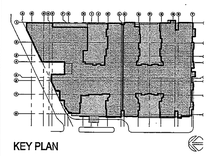

KEY PLAN

Project:
Jewish Home for The Aging
FOUNTAINVIEW AT EISENBERG VILLAGE

6440 Wilbur Ave
Reseda, CA. 91335

JEWISH HOME FOR THE AGING
18855 Victory Blvd.
Reseda, CA 91335

Project Number: 04206.00

Interior Elevations

Date: 04/05/2007
Drawn By: _____
Checked By: _____

A11.01
Sheet No.

File Path & Name: F:\PROJECTS\04206-00\A-CD\SHEETS\A11.01.DWG
© WWCOT 2006 May 28, 2007 - 03:58 pm

RECEIVED BY SUFFOLK ON 06/01/07

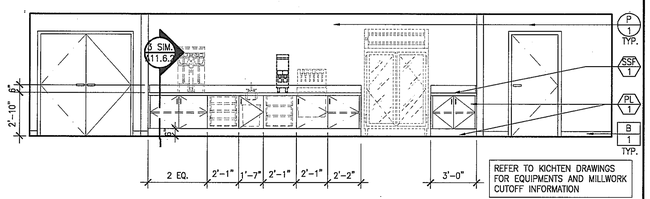

D

-.DWG

BUS AREA ROOM 135A

Scale 1/4" = 1'-0" | 16

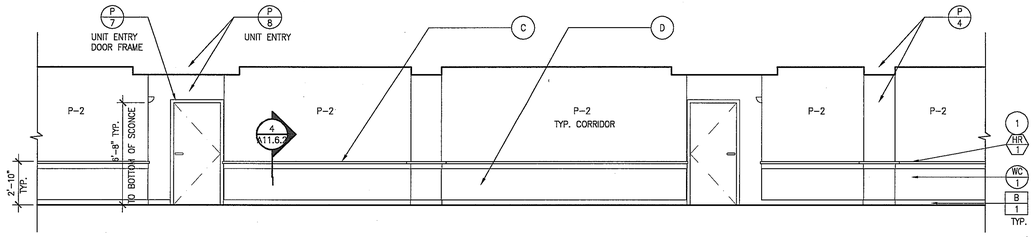

-.DWG

TYPICAL CORRIDOR - HANDRAIL SIDE

Scale 1/4" = 1'-0" | 8

-.DWG

NOT USED

Scale N.T.S. | 15

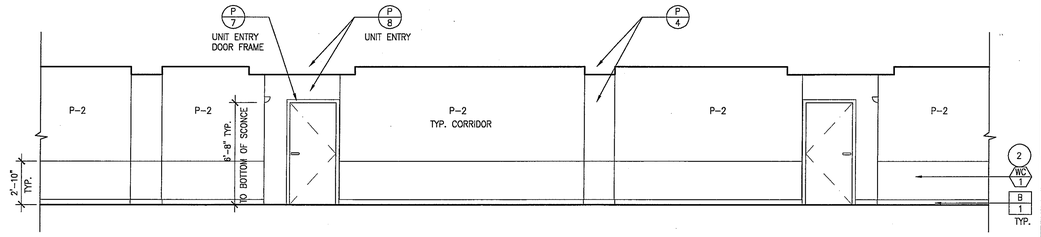

-.DWG

TYPICAL CORRIDOR

Scale 1/4" = 1'-0" | 7

1. REFER TO SPECIFICATION BOOK, SECTION 09000: COLORS & MATERIALS FOR ALL SCHEDULED INTERIOR FINISHES.
2. REFER TO FINISH PLAN #A12 SERIES FOR FINISH LEGEND & MATERIAL.
3. REFER TO REFLECTED CEILING PLANS FOR CEILING HEIGHTS.
4. TYP. CORRIDOR TO HAVE WALLCOVERING (WC1) UPTO 31" A.F.F. THROUGHOUT U.O.N.; PROVIDE & INSTALL HANDRAIL (HR1) ON ONE SIDE OF CORRIDOR AND JUST WALLCOVERING WAINSCOT ON THE OTHER SIDE (ALTERNATE PRICING: PROVIDE PRICING FOR MINIMUM EDGE TRIM FOR WALLCOVERING WAINSCOT.)

KEYNOTES:

1. HANDRAIL – G.C. TO PROVIDE BACKING
2. PROVIDE J–MOLD (WPR1) @ WAINSCOT WALLCOVERING
3. PROVIDE MOTORIZED CEILING TRACK DRAPERY (WT–T) AT SCREEN.

a-lg-int-elev.dwg

General Notes

Scale NA | 2

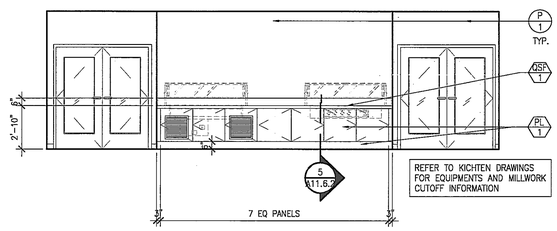

C

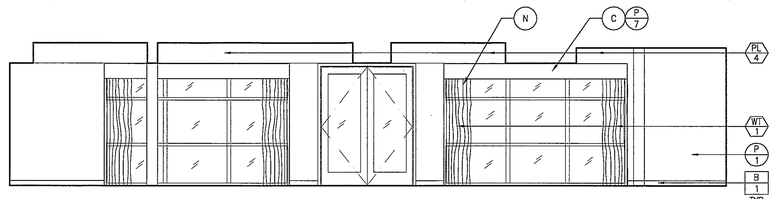

B

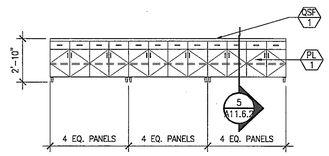

D

-.DWG

DINING ROOM ROOM 135

Scale 1/4" = 1'-0" | 5

INTERIOR ELEVATION & EQUIPMENT SCHEDULE		
SYMBOL	ITEM DESCRIPTION	REMARKS
A	FIREPLACE PER STRUCTURAL	
B	LCD TV (SIZE: 37")	OWNER PROVIDED
C	PAINTED WOOD VALANCE (P7)	GC TO PROVIDE AND INSTALL
D	VANITY LIGHT PER SCHEDULE	GC TO PROVIDE AND INSTALL
E	PREFABRICATED METAL PACKAGE BOXES (QUANTITIES: 6)	GC TO PROVIDE AND INSTALL
F	VENDING MACHINE	OWNER PROVIDED
G	PREFABRICATED METAL MAILSLOTS (QUANTITIES: 4x28=112)	GC TO PROVIDE AND INSTALL
H	HOT DOG MACHINE	OWNER PROVIDED
I	WOOD–FRAMED GLASS SCREEN (FIRE–RATED GLASS WITH WINDOW FILM INSIDE, WT–1)	GC TO PROVIDE AND INSTALL
J	LOCKABLE WINE/LIQUOR STORAGE BY OTHERS	GC TO PROVIDE AND INSTALL
J1	FIXED DOOR PANEL BY GC TO MATCH WINE/LIQUOR STORAGE	
K	BARRE	GC TO PROVIDE AND INSTALL
L	CUBIES (QUANTITIES: 112)	GC TO PROVIDE AND INSTALL
M	POPCORN MACHINE	OWNER PROVIDED
N	DRAPERY WING ON ROD	
P	THEATER SCREEN	
Q	FRAMED ART MIRROR	GC TO PROVIDE AND INSTALL
R	FRAMELESS MIRROR (SEE INTERIOR ELEVATION AND PLAN FOR THE SIZE)	GC TO PROVIDE AND INSTALL
S	WALL MOUNTED 13" LCD SCREEN ON AN ADJUSTABLE ARM	
T	RECESSED SPEAKER BY OTHERS	
U	RECESSED MEDIA CABINET BY OTHERS	
V	MARLITE WALL PANEL SYSTEM	
W	REFRIGERATOR	

REFER TO SPECIFICATIONS FOR SCHEDULED FIXTURE & EQUIPMENT

g-lg-int.dwg

Interior Elevations Legend

Scale | 1

WWC OT
Widom Wein Cohen O'Leary Terasawa

3130 Wilshire Boulevard
Sixth Floor
Santa Monica, California 90403
T (310) 828-0040
F (310) 453-9432
www.wwcot.com

Inland Empire
Palm Springs
Moorpark
Shanghai, China

RECEIVED
10:08 am, Aug 14, 2008
FRAMEMAX

Building Department Submittal: June 1, 2007
Issued For Bid:
Issued For Construction:

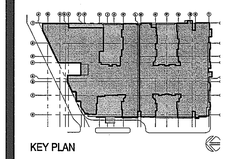

KEY PLAN

Project:
Jewish Home for The Aging
FOUNTAINVIEW AT EISENBERG VILLAGE

6440 Wilbur Ave
Reseda, CA. 91335

JEWISH HOME

JEWISH HOME FOR THE AGING
18855 Victory Blvd.
Reseda, CA 91335

Project Number: 04206.00

Interior Elevations

Date: 04/05/2007
Drawn By:
Checked By:

A11.02
Sheet No.

File Path & Name: F:\PROJECTS\04206-00\A-CD\SHEETS\A11.02.DWG
© WWCOT 2006 May 28, 2007 - 03:58 pm

RECEIVED BY SUFFOLK ON 06/01/07

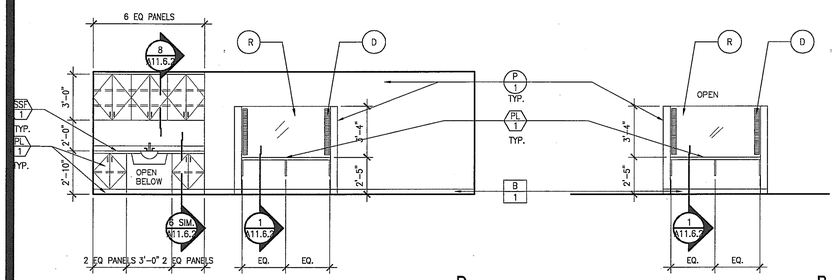

D B

SPA/HAIR CARE ROOM 121 — Scale 1/4" = 1'-0" — 14

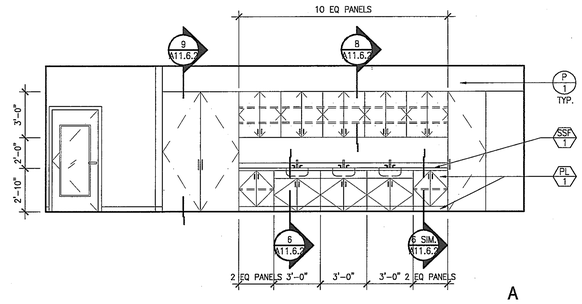

A

CREATIVE ARTS ROOM 146 — Scale 1/4" = 1'-0" — 8

1. REFER TO SPECIFICATION BOOK, SECTION 09000: COLORS & MATERIALS FOR ALL SCHEDULED INTERIOR FINISHES.
2. REFER TO FINISH PLAN #A12 SERIES FOR FINISH LEGEND & MATERIAL.
3. REFER TO REFLECTED CEILING PLANS FOR CEILING HEIGHTS.
4. TYP. CORRIDOR TO HAVE WALLCOVERING (WC1) UPTO 31" A.F.F. THROUGHOUT U.O.N.; PROVIDE & INSTALL HANDRAIL (HR1) ON ONE SIDE OF CORRIDOR AND JUST WALLCOVERING WAINSCOT ON THE OTHER SIDE (ALTERNATE PRICING: PROVIDE PRICING FOR MINIMUM EDGE TRIM FOR WALLCOVERING WAINSCOT.)

KEYNOTES:

1. HANDRAIL – G.C. TO PROVIDE BACKING
2. PROVIDE J-MOLD (WPR1) @ WAINSCOT WALLCOVERING
3. PROVIDE MOTORIZED CEILING TRACK DRAPERY (WT-T) AT SCREEN.

General Notes — Scale NA — 2

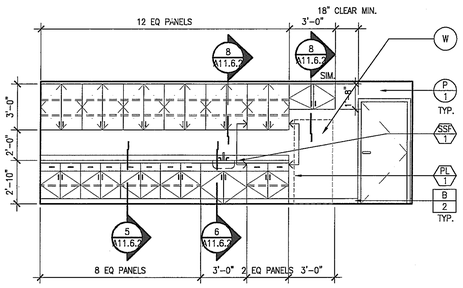

C

EMPLOYEE DINING ROOM 137 — Scale 1/4" = 1'-0" — 17

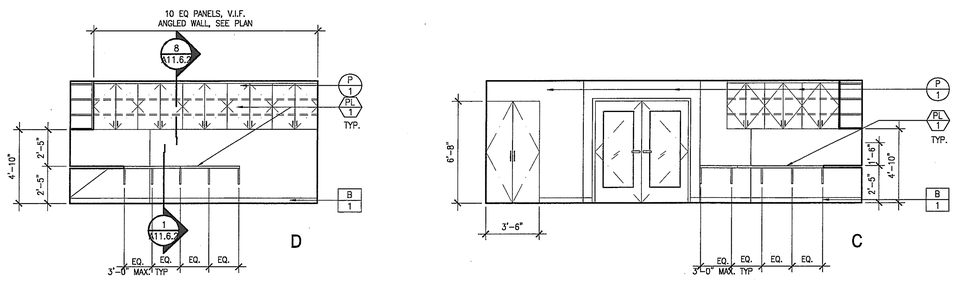

D C

BUSINESS CENTER ROOM 133 — Scale 1/4" = 1'-0" — 7

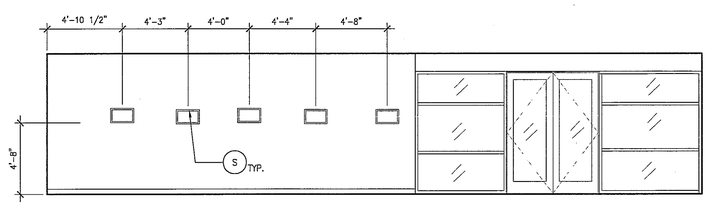

D

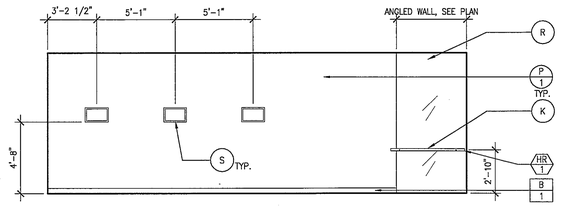

B

EXERCISE/WELLNESS ROOM 122 — Scale 1/4" = 1'-0" — 6

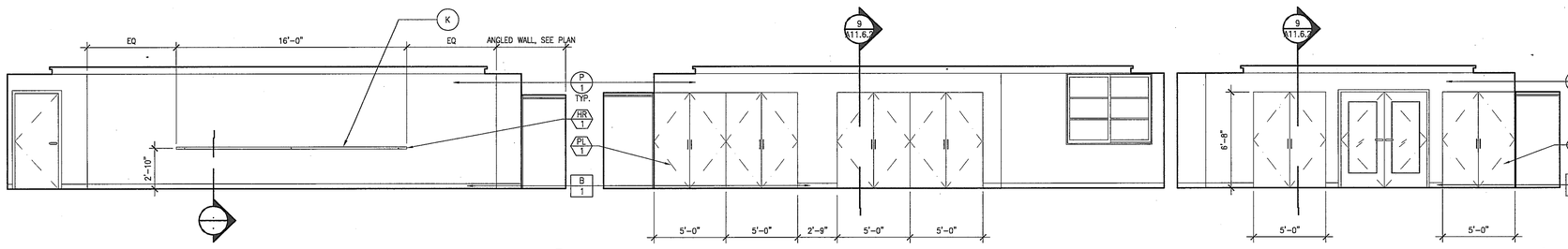

D B A

EVENT CENTER ROOM 147 — Scale 1/4" = 1'-0" — 5

INTERIOR ELEVATION & EQUIPMENT SCHEDULE		
SYMBOL	ITEM DESCRIPTION	REMARKS
A	FIREPLACE PER STRUCTURAL	
B	LCD TV (SIZE: 37")	OWNER PROVIDED
C	PAINTED WOOD VALANCE (P7)	GC TO PROVIDE AND INSTALL
D	VANITY LIGHT PER SCHEDULE	GC TO PROVIDE AND INSTALL
E	PREFABRICATED METAL PACKAGE BOXES (QUANTITIES: 6)	GC TO PROVIDE AND INSTALL
F	VENDING MACHINE	OWNER PROVIDED
G	PREFABRICATED METAL MAILSLOTS (QUANTITIES: 4x28=112)	GC TO PROVIDE AND INSTALL
H	HOT DOG MACHINE	OWNER PROVIDED
I	WOOD-FRAMED GLASS SCREEN (FIRE-RATED GLASS WITH WINDOW FILM INSIDE, WT-1)	GC TO PROVIDE AND INSTALL
J J1	LOCKABLE WINE/LIQUOR STORAGE BY OTHERS FIXED DOOR PANEL BY GC TO MATCH WINE/LIQUOR STORAGE	GC TO PROVIDE AND INSTALL
K	BARRE	GC TO PROVIDE AND INSTALL
L	CUBIES (QUANTITIES: 112)	GC TO PROVIDE AND INSTALL
M	POPCORN MACHINE	OWNER PROVIDED
N	DRAPERY WING ON ROD	
P	THEATER SCREEN	
Q	FRAMED ART MIRROR	GC TO PROVIDE AND INSTALL
R	FRAMELESS MIRROR (SEE INTERIOR ELEVATION AND PLAN FOR THE SIZE)	GC TO PROVIDE AND INSTALL
S	WALL MOUNTED 13" LCD SCREEN ON AN ADJUSTABLE ARM	
T	RECESSED SPEAKER BY OTHERS	
U	RECESSED MEDIA CABINET BY OTHERS	
V	MARLITE WALL PANEL SYSTEM	
W	REFRIGERATOR	

REFER TO SPECIFICATIONS FOR SCHEDULED FIXTURE & EQUIPMENT

Interior Elevations Legend — Scale — 1

WWC OT
Widom Wein Cohen O'Leary Terasawa

3130 Wilshire Boulevard
Sixth Floor
Santa Monica, California 90403
T (310) 828-0040
F (310) 453-9432
www.wwcot.com

Inland Empire
Palm Springs
Moorpark
Shanghai, China

RECEIVED
10:08 am, Aug 14, 2008
FRAMEMAX

Building Department Submittal: June 1, 2007
Issued For Bid:
Issued For Construction:

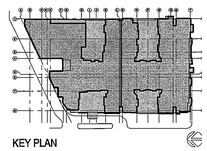

KEY PLAN

Project:
Jewish Home for The Aging
FOUNTAINVIEW AT EISENBERG VILLAGE
6440 Wilbur Ave
Reseda, CA. 91335

JEWISH HOME FOR THE AGING
18855 Victory Blvd.
Reseda, CA 91335
Project Number: 04206.00

Interior Elevations

Date: 04/05/2007
Drawn By:
Checked By:

A11.03
Sheet No.

File Path & Name: F:\PROJECTS\04206-00\A-CD\SHEETS\A11.03.DWG
© WWCOT 2006 May 28, 2007 - 03:59 pm

RECEIVED BY SUFFOLK ON 06/01/07

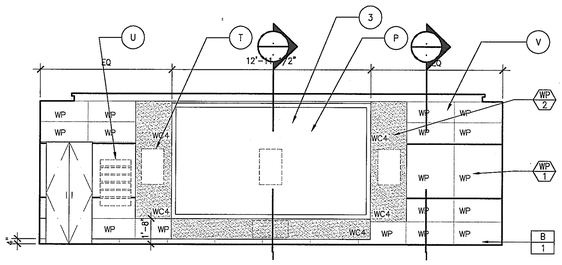

C

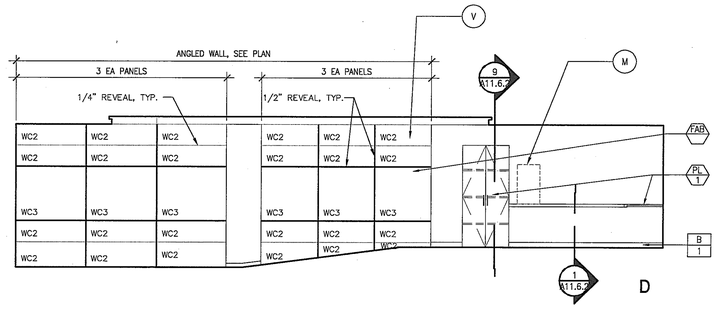

D

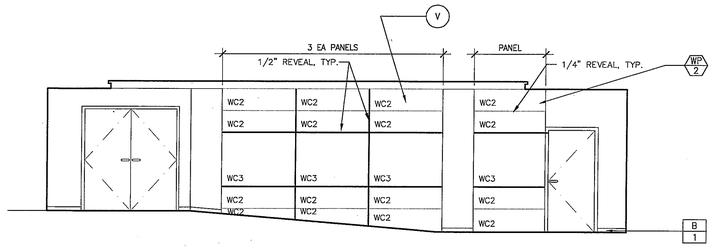

B

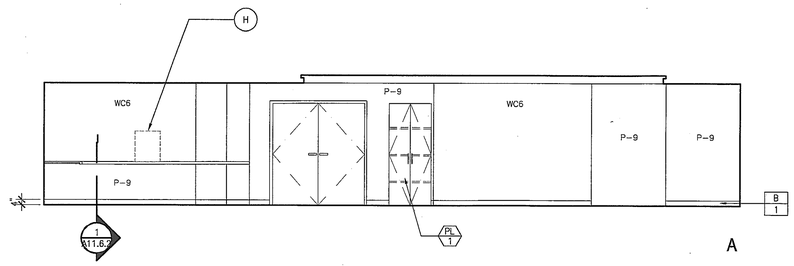

A

THEATER ROOM 012

Scale 1/4" = 1'-0" 6

1. REFER TO SPECIFICATION BOOK, SECTION 09000: COLORS & MATERIALS FOR ALL SCHEDULED INTERIOR FINISHES.
2. REFER TO FINISH PLAN #A12 SERIES FOR FINISH LEGEND & MATERIAL.
3. REFER TO REFLECTED CEILING PLANS FOR CEILING HEIGHTS.
4. TYP. CORRIDOR TO HAVE WALLCOVERING (WC1) UPTO 31" A.F.F. THROUGHOUT U.O.N.; PROVIDE & INSTALL HANDRAIL (HR1) ON ONE SIDE OF CORRIDOR AND JUST WALLCOVERING WAINSCOT ON THE OTHER SIDE (ALTERNATE PRICING: PROVIDE PRICING FOR MINIMUM EDGE TRIM FOR WALLCOVERING WAINSCOT.)

KEYNOTES:

1. HANDRAIL – G.C. TO PROVIDE BACKING
2. PROVIDE J-MOLD (WPR1) @ WAINSCOT WALLCOVERING
3. PROVIDE MOTORIZED CEILING TRACK DRAPERY (WT-T) AT SCREEN.

a-lg-int-elev.dwg

General Notes Scale NA 2

INTERIOR ELEVATION & EQUIPMENT SCHEDULE

SYMBOL	ITEM DESCRIPTION	REMARKS
A	FIREPLACE PER STRUCTURAL	
B	LCD TV (SIZE: 37")	OWNER PROVIDED
C	PAINTED WOOD VALANCE (P7)	GC TO PROVIDE AND INSTALL
D	VANITY LIGHT PER SCHEDULE	GC TO PROVIDE AND INSTALL
E	PREFABRICATED METAL PACKAGE BOXES (QUANTITIES: 6)	GC TO PROVIDE AND INSTALL
F	VENDING MACHINE	OWNER PROVIDED
G	PREFABRICATED METAL MAILSLOTS (QUANTITIES: 4x28=112)	GC TO PROVIDE AND INSTALL
H	HOT DOG MACHINE	OWNER PROVIDED
I	WOOD-FRAMED GLASS SCREEN (FIRE-RATED GLASS WITH WINDOW FILM INSIDE, WT-1)	GC TO PROVIDE AND INSTALL
J	LOCKABLE WINE/LIQUOR STORAGE BY OTHERS	GC TO PROVIDE AND INSTALL
J1	FIXED DOOR PANEL BY GC TO MATCH WINE/LIQUOR STORAGE	
K	BARRE	GC TO PROVIDE AND INSTALL
L	CUBIES (QUANTITIES: 112)	GC TO PROVIDE AND INSTALL
M	POPCORN MACHINE	OWNER PROVIDED
N	DRAPERY WING ON ROD	
P	THEATER SCREEN	
Q	FRAMED ART MIRROR	GC TO PROVIDE AND INSTALL
R	FRAMELESS MIRROR (SEE INTERIOR ELEVATION AND PLAN FOR THE SIZE)	GC TO PROVIDE AND INSTALL
S	WALL MOUNTED 13" LCD SCREEN ON AN ADJUSTABLE ARM	
T	RECESSED SPEAKER BY OTHERS	
U	RECESSED MEDIA CABINET BY OTHERS	
V	MARLITE WALL PANEL SYSTEM	
W	REFRIGERATOR	

REFER TO SPECIFICATIONS FOR SCHEDULED FIXTURE & EQUIPMENT

a-lg-int.dwg

Interior Elevations Legend Scale 1

WWCOT
Widom Wein Cohen O'Leary Terasawa

3130 Wilshire Boulevard
Sixth Floor
Santa Monica, California 90403
T (310) 828-0040
F (310) 453-9432
www.wwcot.com

Inland Empire
Palm Springs
Moorpark
Shanghai, China

RECEIVED
10:08 am, Aug 14, 2008
FRAMEMAX

Building Department Submittal: June 1, 2007
Issued For Bid: _____
Issued For Construction: _____

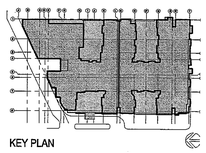

KEY PLAN

Project:
Jewish Home for The Aging
FOUNTAINVIEW AT EISENBERG VILLAGE
6440 Wilbur Ave
Reseda, CA. 91335

JEWISH HOME
JEWISH HOME FOR THE AGING
18855 Victory Blvd.
Reseda, CA 91335
Project Number: 04206.00

Interior Elevations

Date: 04/05/2007
Drawn By: _____
Checked By: _____

A11.04
Sheet No.

File Path & Name: F:\PROJECTS\04206.00\A-CD\SHEETS\A11.04.DWG
© WWCOT 2006 May 28, 2007 - 03:59 pm

RECEIVED BY SUFFOLK ON 06/01/07

X

Scale X" = 1'-0"

-.DWG

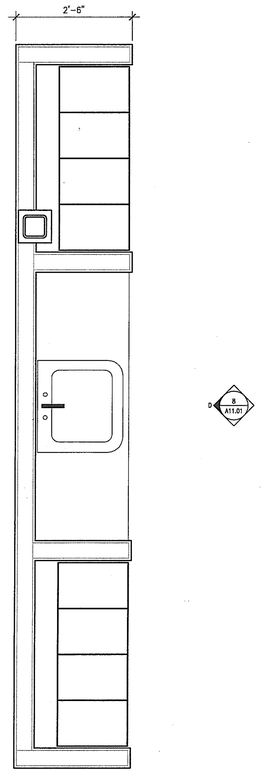

Enlarged Counter Plan at Billards

Scale X" = 1'-0"

-.DWG

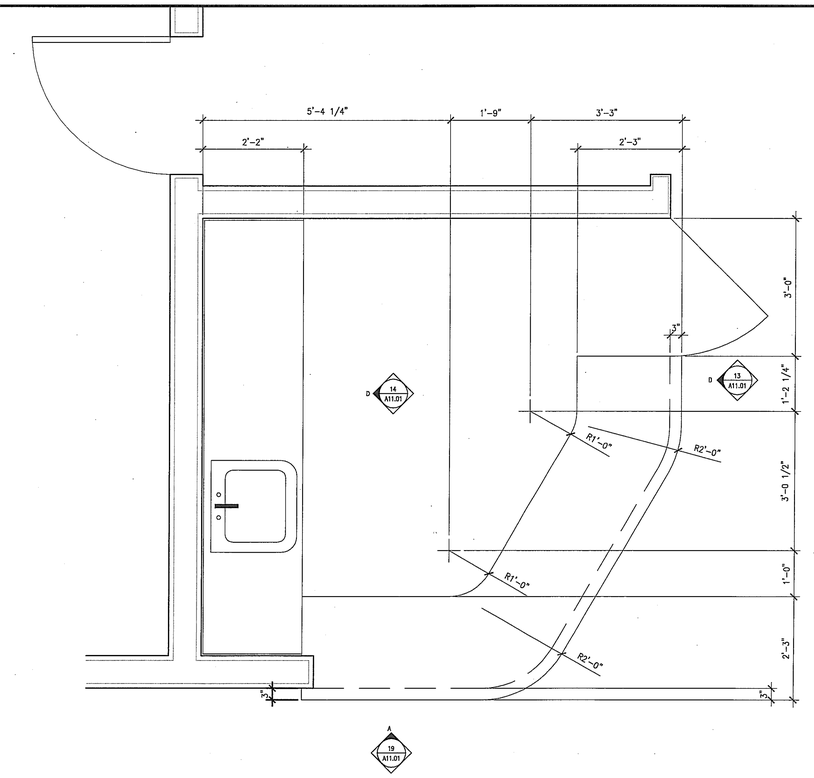

Enlarged Counter Plan at Coffee Bar

Scale X" - 1'-0"

7

1. SEE INTERIOR ELEVATIONS FOR MATERIALS AND COLOR SCHEDULE INFORMATION.
2. ALL MILLWORK TO COMPLY WITH WIC STANDARDS.

Not Used

Scale 3/4"=1'-0"

18

a-dt-millwork.dwg

Not Used

Scale 3/4"=1'-0"

17

a-dt-millwork.dwg

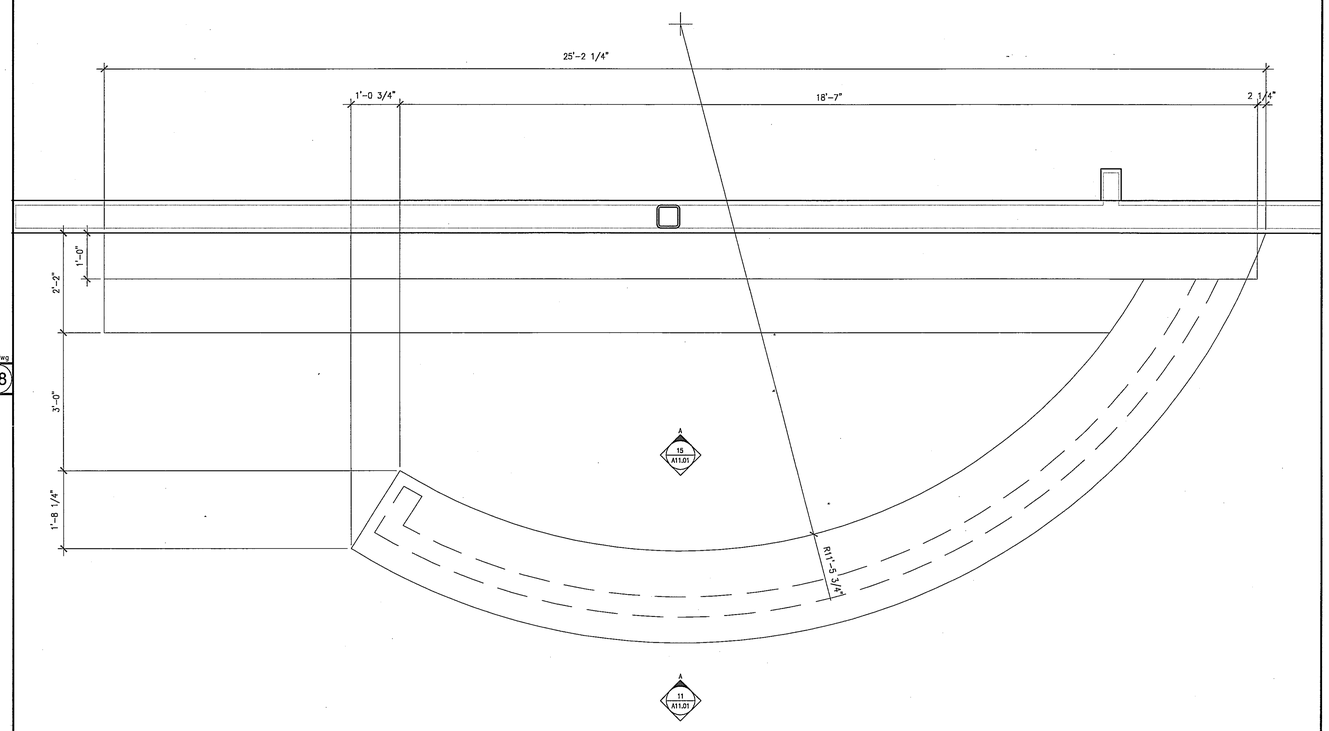

Enlarged Counter Plan at Lounge Bar

Scale X" = 1'-0"

5

-.DWG

General Notes - Architectural Woodwork

Scale X" = 1'-0"

-

-.DWG

WWC OT
Widom Wein Cohen O'Leary Terasawa

3130 Wilshire Boulevard
Sixth Floor
Santa Monica, California 90403
T (310) 828-0040
F (310) 453-9432
www.wwcot.com

Inland Empire
Palm Springs
Moorpark
Shanghai, China

RECEIVED
10:08 am, Aug 14, 2008
FRAMEMAX

Building Department Submittal: June 1, 2007
Issued For Bid: _____
Issued For Construction: _____

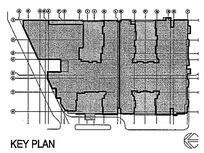

KEY PLAN

Project:
Jewish Home for The Aging
FOUNTAINVIEW AT EISENBERG VILLAGE
6440 Wilbur Ave
Reseda, CA. 91335

JEWISH HOME FOR THE AGING
18855 Victory Blvd.
Reseda, CA 91335
Project Number: 04206.00

INTERIOR DETAIL: MILLWORK PUBLIC AREAS

Date: 04/05/2007
Drawn By: _____
Checked By: _____

A11.6.1
Sheet No.

File Path & Name: F:\PROJECTS\04206.00\A-CD\SHEETS\A11.6.1.DWG
© WWCOT 2006 May 28, 2007 - 03:59 pm

RECEIVED BY SUFFOLK ON 06/01/07

Not Used — Scale 3/4"=1'-0" — 20

Not Used — Scale 3/4"=1'-0" — 16

Not Used — Scale 3/4"=1'-0" — 12

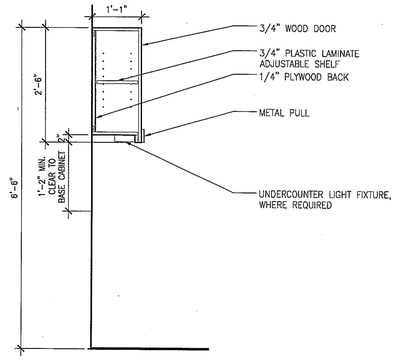

Upper Cabinet — Scale 3/4"=1'-0" — 8

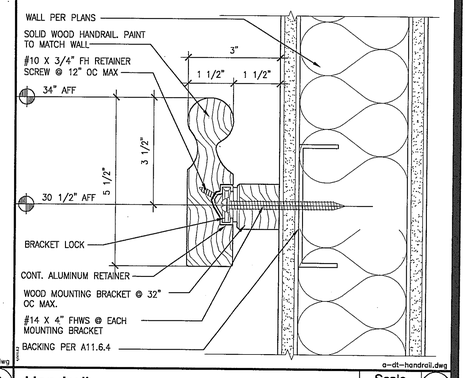

Handrail — Scale 6" = 1'-0" — 4

Not Used — Scale 3/4"=1'-0" — 19

Not Used — Scale 3/4"=1'-0" — 15

Not Used — Scale 3/4"=1'-0" — 11

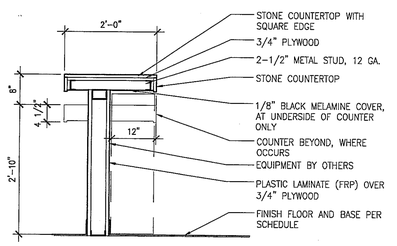

Base Cabinet - Bar Counter — Scale 3/4"=1'-0" — 7

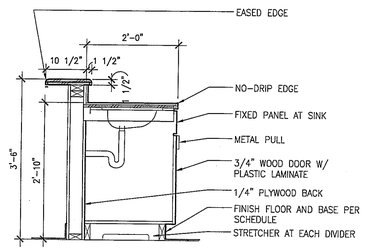

Base Cabinet w/ Sink — Scale 3/4"=1'-0" — 3

Not Used — Scale 3/4"=1'-0" — 18

Not Used — Scale 3/4"=1'-0" — 14

Not Used — Scale 3/4"=1'-0" — 10

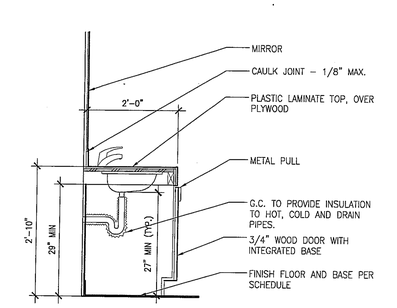

Base Cabinet w/Lavatory — Scale 3/4"=1'-0" — 6

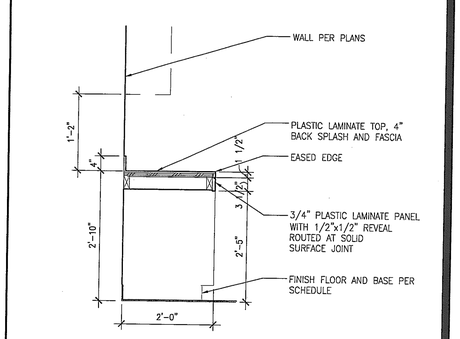

Work Counter at Base Cabinet — Scale 3/4"=1'-0" — 2

Not Used — Scale 3/4"=1'-0" — 17

Not Used — Scale 3/4"=1'-0" — 13

Full Height Cabinet — Scale 3/4"=1'-0" — 9

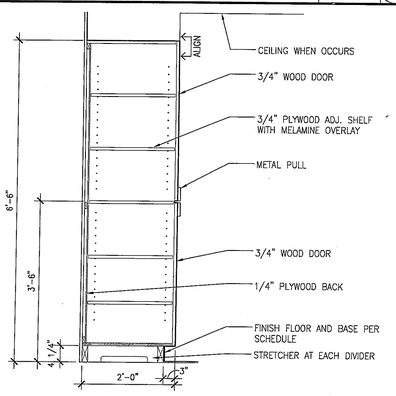

Base Cabinet — Scale 3/4"=1'-0" — 5

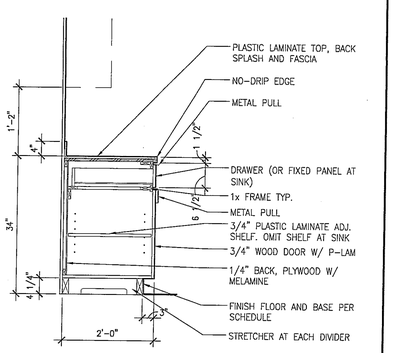

Work Counter — Scale 3/4"=1'-0" — 1

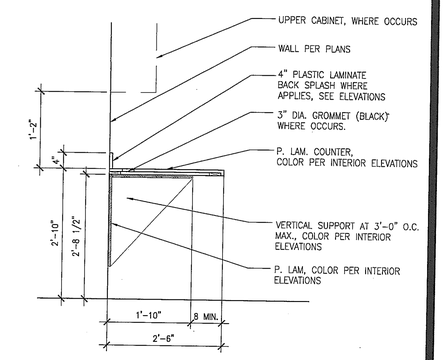

WWCOT
Widom Wein Cohen O'Leary Terasawa

3130 Wilshire Boulevard
Sixth Floor
Santa Monica, California 90403
T (310) 828-0040
F (310) 453-9432
www.wwcot.com

Inland Empire
Palm Springs
Moorpark
Shanghai, China

RECEIVED
10:08 am, Aug 14, 2008
FRAMEMAX

Building Department Submittal: June 1, 2007
Issued For Bid:
Issued For Construction:

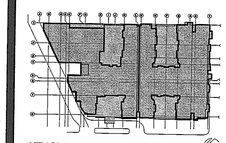

KEY PLAN

Project:
Jewish Home for The Aging
FOUNTAINVIEW AT EISENBERG VILLAGE
6440 Wilbur Ave
Reseda, CA. 91335

JEWISH HOME FOR THE AGING
18855 Victory Blvd.
Reseda, CA 91335

Project Number: 04206.00

INTERIOR DETAIL:
MILLWORK
PUBLIC AREAS

Date: 04/05/2007
Drawn By:
Checked By:

A11.6.2
Sheet No.

File Path & Name: F:\PROJECTS\04206-00\A-CD\SHEETS\A11.6.2.DWG
© WWCOT 2006 May 28, 2007 - 03:59 pm

RECEIVED BY SUFFOLK ON 06/01/07

Not Used | Scale 3/4"=1'-0" | 20

Not Used | Scale 3/4"=1'-0" | 16

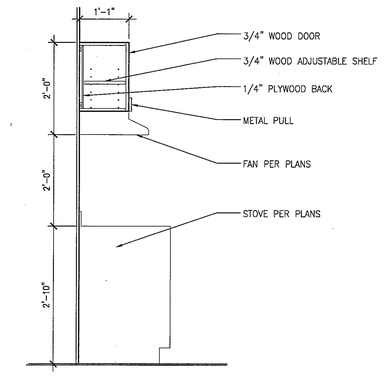

Unit Kitchen - Upper Cabinet with Hood | Scale 3/4"=1'-0" | 20

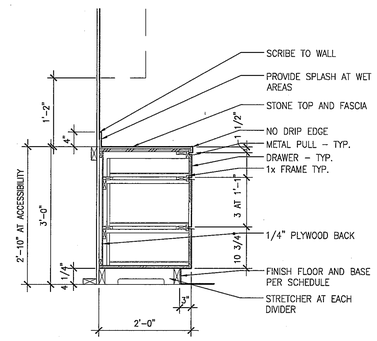

Unit Kitchen - Base Cabinet - Three Drawer | Scale 3/4"=1'-0" | 16

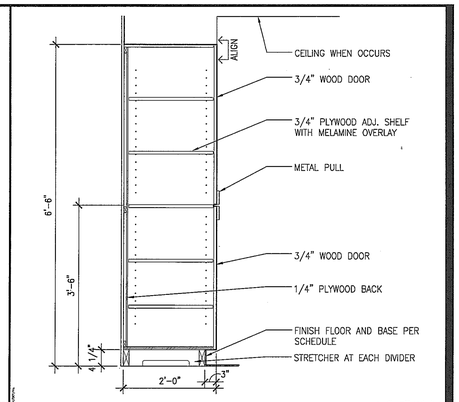

Unit Kitchen - Full Cabinet | Scale 3/4"=1'-0" | 12

Not Used | Scale 3/4"=1'-0" | 19

Not Used | Scale 3/4"=1'-0" | 15

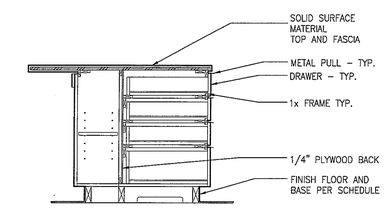

Unit Kitchen - Base Cabinet - Island | Scale 3/4"=1'-0" | 19

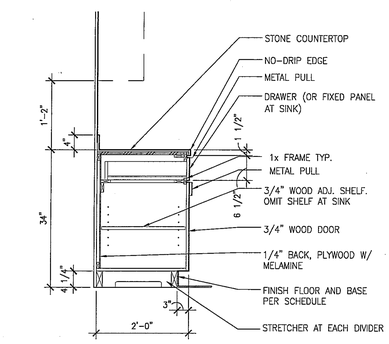

Unit Kitchen -Base Cabinet - One Drawer | Scale 3/4"=1'-0" | 15

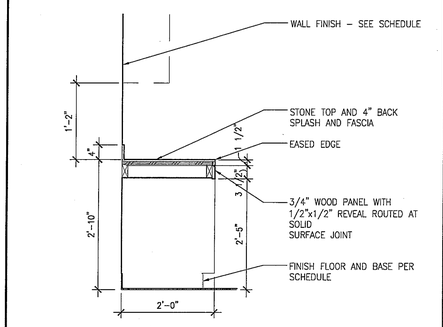

Unit Kitchen - Base Cabinet - Open | Scale 3/4"=1'-0" | 11

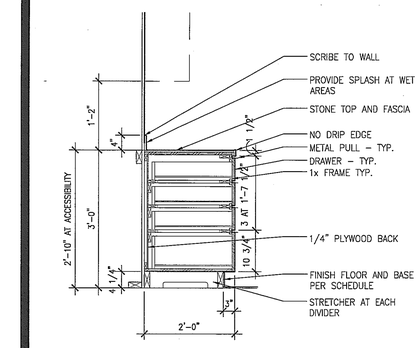

Unit Bathroom - Base Cabinet w/Drawers | Scale 3/4"=1'-0" | 18

Not Used | Scale 3/4"=1'-0" | 14

Not Used | Scale 3/4"=1'-0" | 10

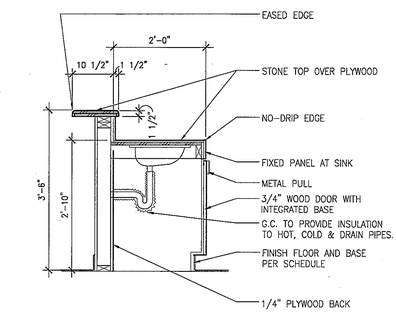

Unit Kitchen - Base Cabinet w/Sink - AC | Scale 3/4"=1'-0" | 14

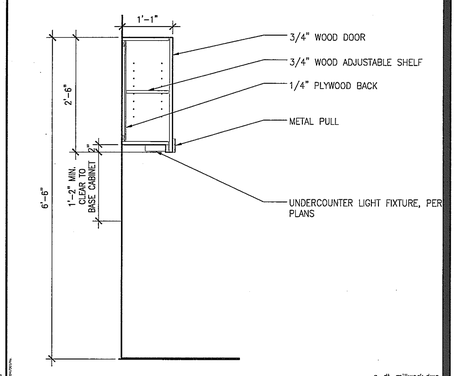

Unit Kitchen - Upper Cabinet | Scale 3/4"=1'-0" | 10

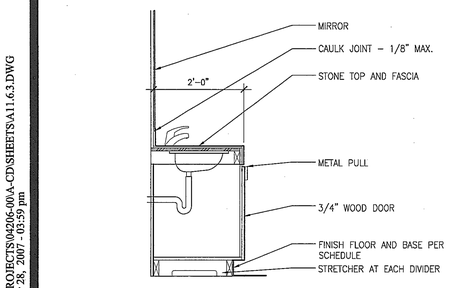

Unit Bathroom - Base Cabinet w/Lavatory | Scale 3/4"=1'-0" | 17

Not Used | Scale 3/4"=1'-0" | 13

Not Used | Scale 3/4"=1'-0" | 9

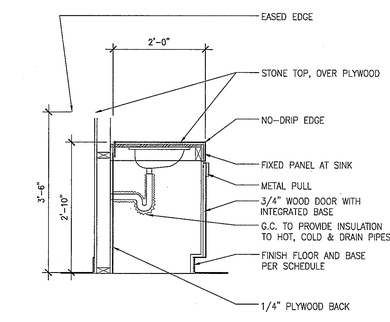

Unit Kitchen - Base Cabinet w/Sink | Scale 3/4"=1'-0" | 13

Not Used | Scale 3/4"=1'-0" | 1

WWC OT
Widom Wein Cohen O'Leary Terasawa

3130 Wilshire Boulevard
Sixth Floor
Santa Monica, California 90403
T (310) 829-0040
F (310) 453-9432
www.wwcot.com

Inland Empire
Palm Springs
Moorpark
Shanghai, China

RECEIVED
10:08 am, Aug 14, 2008
FRAMEMAX

Building Department Submittal: June 1, 2007
Issued For Bid:
Issued For Construction:

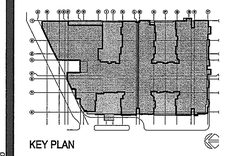

KEY PLAN

Project:
Jewish Home for The Aging
FOUNTAINVIEW AT EISENBERG VILLAGE

6440 Wilbur Ave
Reseda, CA. 91335

JEWISH HOME

JEWISH HOME FOR THE AGING
18855 Victory Blvd.
Reseda, CA 91335

Project Number: 04206.00

INTERIOR DETAIL: MILLWORK UNITS

Date: 04/05/2007
Drawn By:
Checked By:

A11.6.3
Sheet No.

File Path & Name: F:\PROJECTS\04206-00\A-CD\SHEETS\A11.6.3.DWG
© WWCOT 2006 May 28, 2007 - 03:59 pm

RECEIVED BY SUFFOLK ON 06/01/07

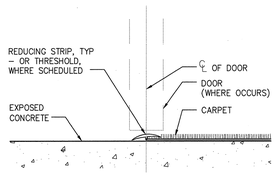

Threshold - Carpet to Conc. | Scale N.T.S. | 20

Not Used | Scale 3/4"=1'-0" | 16

Not Used | Scale 3/4"=1'-0" | 12

Not Used | Scale 3/4"=1'-0" | 8

Not Used | Scale | 4

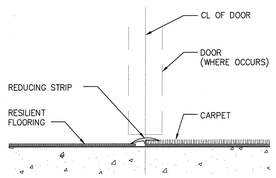

Threshold - Capet to Resilient Floor | Scale N.T.S. | 19

Not Used | Scale 3/4"=1'-0" | 15

Kitchen Sink Cabinet | Scale 3/4"=1'-0" | 11

Not Used | Scale 3/4"=1'-0" | 7

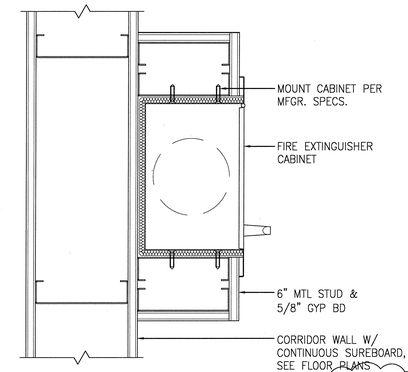

Fire Extinguisher Cabinet | Scale 3" = 1'-0" | 3

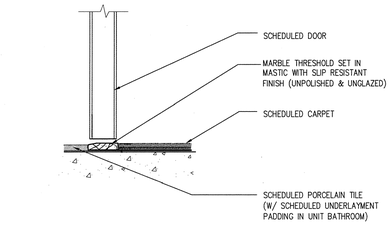

A–DET–DO–WIN.dwg

Door Sill at Ceramic Tile-Carpet Transition | Scale 3"=1'-0" | 18

Not Used | Scale 3/4"=1'-0" | 14

Not Used | Scale 3/4"=1'-0" | 10

Not Used | Scale 3/4"=1'-0" | 6

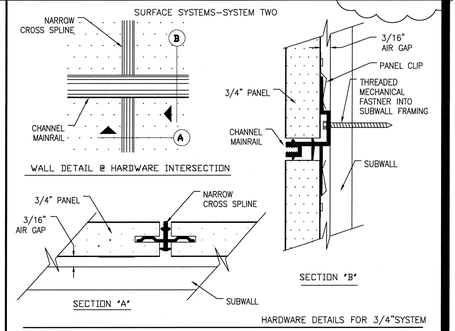

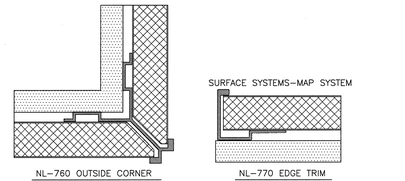

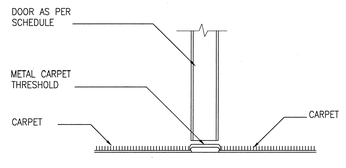

A–DET–DO–WIN.dwg

Door Sill at Carpet-Carpet Transition | Scale 3"=1'-0" | 17

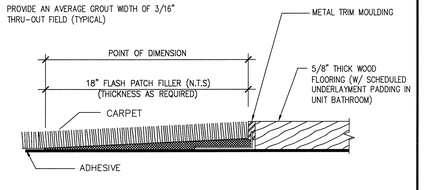

Carpet to Wood Floor | Scale N.T.S. | 13

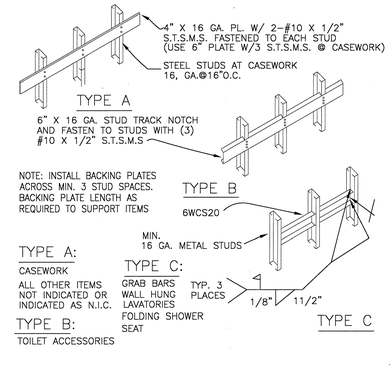

Wall Backing Plate Support for Millwork | Scale N.T.S. | 9

Not Used | Scale 3/4"=1'-0" | 5

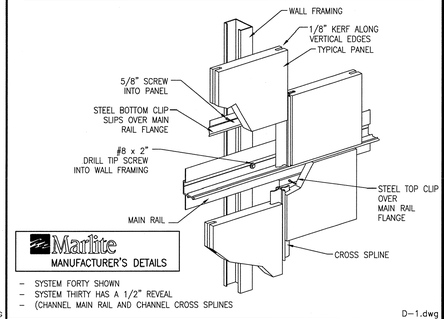

D–1.dwg

WOOD PANEL DETAILS | Scale 3"=1'-0" | 1

File Path & Name: F:\PROJECTS\04206-00A-CD\SHEETS\A11.6.4.DWG
© WWCOT 2006 May 13, 2008 - 11:09 am

WWC OT
Widom Wein Cohen O'Leary Terasawa

3130 Wilshire Boulevard
Sixth Floor
Santa Monica, California 90403
T (310) 828-0040
F (310) 453-9432
www.wwcot.com

Inland Empire
Palm Springs
Moorpark
Shanghai, China

RECEIVED
10:08 am, Aug 14, 2008
FRAMEMAX

Building Department
Submittal: June 1, 2007
Issued For Bid:
Issued For
Construction: January 29, 2008

5 05–12–2008 FIRE EXTINGUISHER REVISIONS

RECEIVED
MAY 16 2008
SUFFOLK CONSTRUCTION

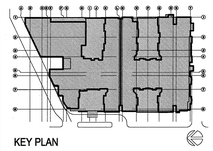

KEY PLAN

5 ——
4 ——
3 ——

Project:
Jewish Home for
The Aging
FOUNTAINVIEW
AT RISENBERG VILLAGE
6440 Wilbur Ave
Reseda, CA. 91335

JEWISH HOME
JEWISH HOME
FOR THE AGING
18855 Victory Blvd.
Reseda, CA 91335
Project Number: 04206.00

Interior Details and
Floor Transitions

Date: 01/21/2008
Drawn By: ——
Checked By: ——

A11.6.4
Sheet No.

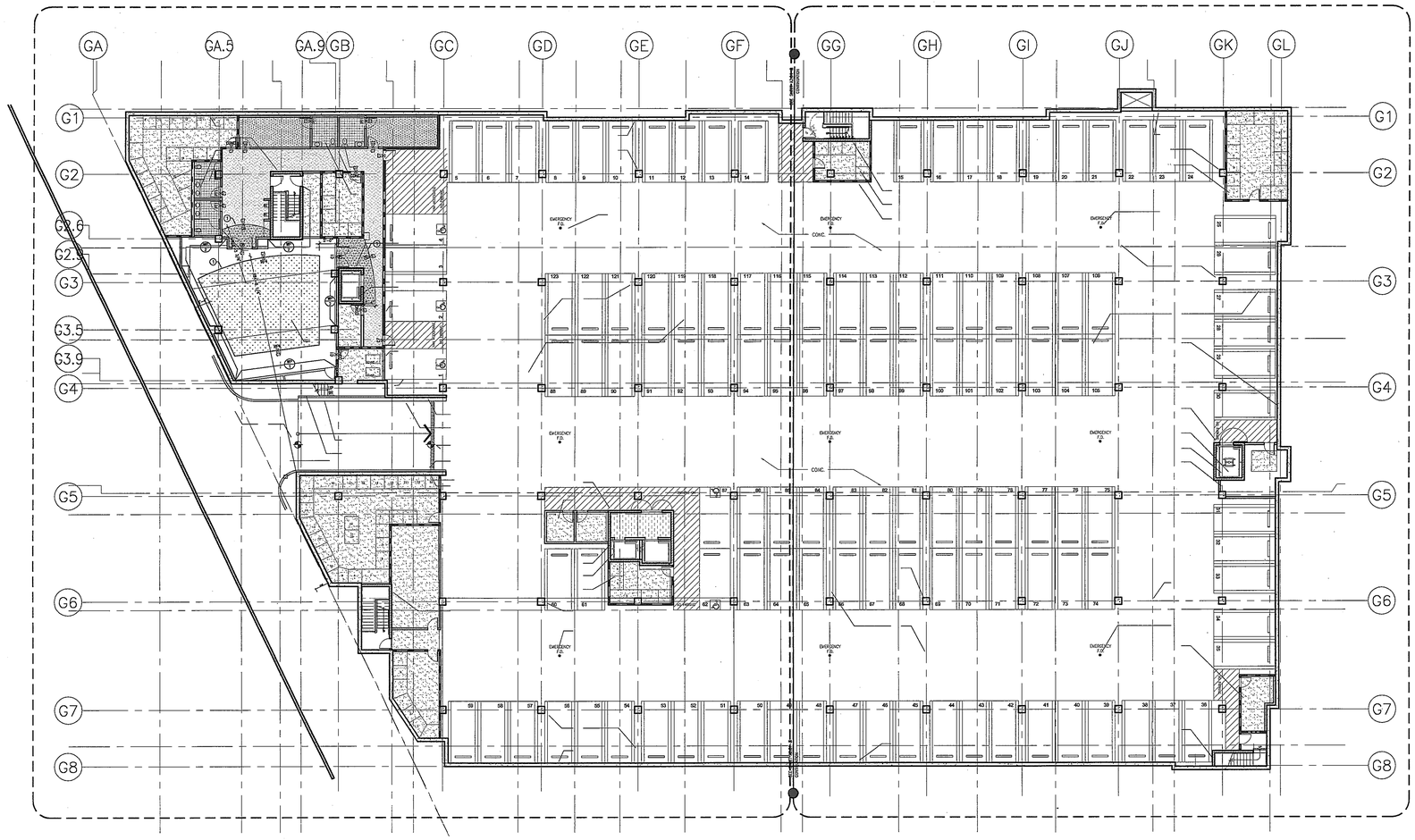

KEYNOTES

1. FLOOR FINISH TO ALIGN W/CEILING ABOVE. C.C. TO USE FULL TILE CARPET WHERE POSSIBLE.
2. LOCATION OF HANDRAIL (HR-1) IN CORRIDORS.

GENERAL NOTES:

1. REFER TO SPECIFICATION BOOK, SECTION 09000: COLORS & MATERIALS FOR ALL SCHEDULED INTERIOR FINISHES.

2. ALL GYP. BD. PARTITIONS & GYP. BD. CEILINGS TO RECEIVE PAINT THROUGHOUT, U.O.N. P-1 TO BE TYPICAL PAINT THROUGHOUT & GYP. BD. CEILING IN COMMON CORRIDORS, U.O.N.
UNITS & COMMON CORRIDOR ABOVE WAINSCOT WALLCOVERING TO BE P-2.

3. ALL BASE IN COMMON AREAS & UNITS TO BE B-1, U.O.N. ALL BASE IN EMPLOYEE AREAS OR BACK OF THE HOUSE TO BE B-2, U.O.N.
CONTRACTOR TO USE WALL BASE FROM COIL/ROLL. CONTRACTOR TO SCORE BACKSIDE FOR CRISP CORNERS.

4. ALL BROADLOOM CARPET TO BE INSTALLED DIRECT GLUED-DOWN. ALL CARPET TILES TO BE INSTALLED QUARTER-TURN.

5. TYP. CORRIDOR TO HAVE WALLCOVERING (WC1) UPTO 31" A.F.F. THROUGHOUT U.O.N.; PROVIDE & INSTALL HANDRAIL (HR1) ON ONE SIDE OF CORRIDOR AND WALLCOVERING WAINSCOT W/ J-MOLD ON THE OTHER SIDE. SEE ELEVATION ON SHEET A11.02.

6. TYPICAL UNIT FINISHES:
FLOORING FINISH- WOODFLOORING (WD-1) IN FOYER & KITCHEN; CARPET (C9) IN DINING, LIVING ROOM & BEDROOM; PORCELAIN TILE (PT-2) IN BATHROOM
WALL FINISH- PAINT (P-2) THROUGHOUT
WINDOW COVERING- WT-2 AT EXTERIOR WINDOW

8. REFER TO SHEET A7.09 FOR ENLARGED RESTROOM FINISH PLAN.

FINISH LEGEND

FLOORING & BASE FINISH

C-1	CARPET 1	
C-2	CARPET 2	
C-3	(NOT USED)	
C-4	(NOT USED)	
C-5	(NOT USED)	
C-6	CARPET 6	
C-7	CARPET 7	
C-8	(NOT USED)	
C-9	CARPET 9	
CONC.	SEALED CONCRETE	
EPX-1	EPOXY RESIN FLOORING 1	
PT-1	PORCELAIN TILE 1 (12"X12")	
PT-2	PORCELAIN TILE 2 (FLOOR & WALL)	
PT-3	PORCELAIN TILE 3 (MOSAIC) (FLOOR & WALL)	
PTB-1	PORCELAIN TILE BASE 1	
PTB-2	PORCELAIN TILE BASE 2	
QT-1	QUARRY TILE	
QTB-1	QUARRY TILE BASE	
B-1	RESILIENT BASE 1	
B-2	RESILIENT BASE 2	
RF-1	RESILIENT FLOORING 1	
RF-2	RESILIENT FLOORING 2	
RF-3	RESILIENT FLOORING 3	
RF-4	RESILIENT FLOORING 3	
RF-5	RESILIENT FLOORING 3	
WD-1	WOOD FLOOR 1	

WALL FINISH

P-1	PAINT 1
P-2	PAINT 2
P-3	PAINT 3
P-4	PAINT 4
P-5	PAINT 5
P-6	PAINT 6
P-7	PAINT 7
P-8	PAINT 8
P-9	PAINT 9
P-10	PAINT 10
WC-1	WALLCOVERING 1
WC-2	WALLCOVERING 2
WC-3	WALLCOVERING 3
WC-4	WALLCOVERING 4
WC-5	WALLCOVERING 5
WC-6	WALLCOVERING 6
WT-1	WINDOW TREATMENT 1
WT-2	WINDOW TREATMENT 2
WT-3	WINDOW TREATMENT 3
WT-4	WINDOW TREATMENT 4

MILLWORK FINISH/MISC.

GL-1	GLASS 1
GL-2	GLASS 2
GL-3	GLASS 3
PL-1	PLASTIC LAMINATE 1
PL-2	PLASTIC LAMINATE 2
PL-3	PLASTIC LAMINATE 3
QSF-1	QUARTZ SURFACE
SSF-1	SOLID SURFACE 1
ST-1	STONE 1
ST-2	STONE 2
HR-1	HANDRAIL 1
WP-1	WALL PANEL 1
WP-2	WALL PANEL 2
WP-3	WALL PANEL 3
WP-4	WALL PANEL 4
WPR1	WALL PROTECTION
WD-2	WOOD 2 (CABINETRY)

SYMBOL

X/# — WALL FINISH
X/# — FLOOR FINISH
X/# — BASE FINISH
X/X — MILLWORK
FINISH A / NOTE B — FLOOR FINISH TRANSITION

NOTE:
1.- FOR ALL DIMENSIONS TO REVEALS, SEE WALL SECTIONS ON 9/A5.01
2.- FOR WINDOW TYPE DEFINITIONS, SEE PLANS.

WWC OT
Widom Wein Cohen O'Leary Terasawa

3130 Wilshire Boulevard
Sixth Floor
Santa Monica, California 90403
T (310) 828-0040
F (310) 453-9432
www.wwcot.com

Inland Empire
Palm Springs
Moorpark
Shanghai, China

RECEIVED
10:08 am, Aug 14, 2008
FRAMEMAX

Building Department Submittal: June 1, 2007
Issued For Bid: _____
Issued For Construction: _____

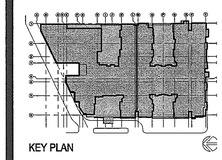

KEY PLAN

Project:
Jewish Home for The Aging
FOUNTAINVIEW AT EISENBERG VILLAGE
6440 Wilbur Ave
Reseda, CA. 91335

JEWISH HOME
JEWISH HOME FOR THE AGING
18855 Victory Blvd.
Reseda, CA 91335

Project Number: 04206.00

Overall Basement Floor Finish Plan

Date: 04/05/2007
Drawn By: _____
Checked By: _____

A12.00
Sheet No.

BASEMENT FLOOR FINISH PLAN

Scale 1/16" = 1'-0"

File Path & Name: F:\PROJECTS\04206.00\A-CD\SHEETS\A12.00.DWG
© WWCOT 2006 May 29, 2007 - 04:00 pm

RECEIVED BY SUFFOLK ON 06/01/07

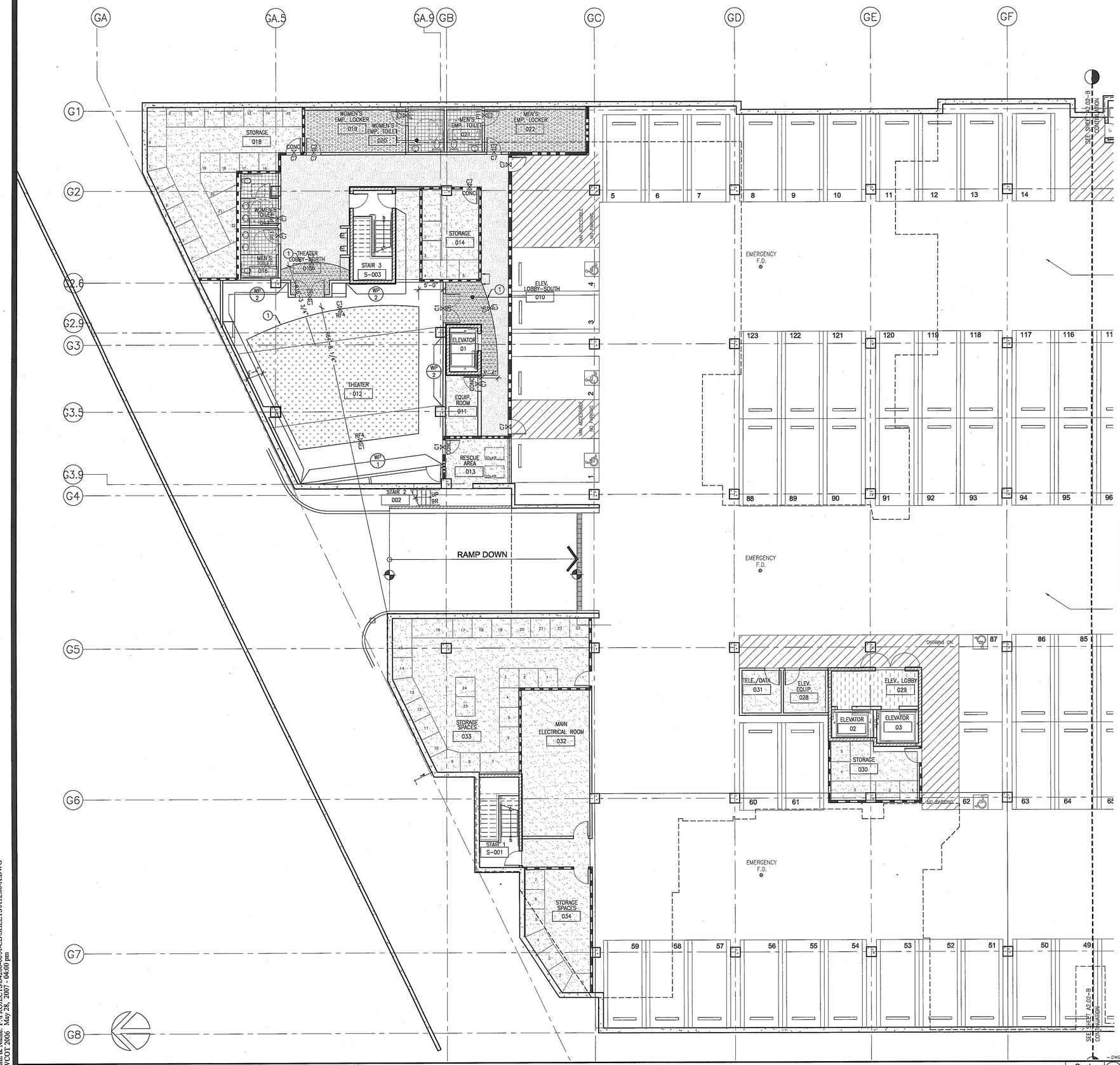

BASEMENT FLOOR FINISH PLAN (NORTH)

Scale 1/8" = 1'-0" 5

KEYNOTES

1. FLOOR FINISH TO ALIGN W/CEILING ABOVE. G.C. TO USE FULL TILE CARPET WHERE POSSIBLE.
2. LOCATION OF HANDRAIL (HR-1) IN CORRIDORS.

GENERAL NOTES:

1. REFER TO SPECIFICATION BOOK, SECTION 09000: COLORS & MATERIALS FOR ALL SCHEDULED INTERIOR FINISHES.

2. ALL GYP. BD. PARTITIONS & GYP. BD. CEILINGS TO RECEIVE PAINT THROUGHOUT, U.O.N. P-1 TO BE TYPICAL PAINT THROUGHOUT & GYP. BD. CEILING IN COMMON CORRIDORS, U.O.N.
UNITS & COMMON CORRIDOR ABOVE WAINSCOT WALLCOVERING TO BE P-2.

3. ALL BASE IN COMMON AREAS & UNITS TO BE B-1, U.O.N. ALL BASE IN EMPLOYEE AREAS OR BACK OF THE HOUSE TO BE B-2, U.O.N.
CONTRACTOR TO USE WALL BASE FROM COIL/ROLL. CONTRACTOR TO SCORE BACKSIDE FOR CRISP CORNERS.

4. ALL BROADLOOM CARPET TO BE INSTALLED DIRECT GLUED-DOWN. ALL CARPET TILES TO BE INSTALLED QUARTER-TURN.

5. TYP. CORRIDOR TO HAVE WALLCOVERING (WC1) UPTO 31" A.F.F. THROUGHOUT U.O.N.; PROVIDE & INSTALL HANDRAIL (HR1) ON ONE SIDE OF CORRIDOR AND WALLCOVERING WAINSCOT W/ J-MOLD ON THE OTHER SIDE. SEE ELEVATION ON SHEET A11.02.

6. TYPICAL UNIT FINISHES:
FLOORING FINISH- WOODFLOORING (WD-1) IN FOYER & KITCHEN; CARPET (C9) IN DINING, LIVING ROOM & BEDROOM; PORCELAIN TILE (PT-2) IN BATHROOM
WALL FINISH- PAINT (P-2) THROUGHOUT
WINDOW COVERING- WT-2 AT EXTERIOR WINDOW

8. REFER TO SHEET A7.09 FOR ENLARGED RESTROOM FINISH PLAN.

FINISH LEGEND

FLOORING & BASE FINISH			WALL FINISH	
	C-1	CARPET 1	P-1	PAINT 1
	C-2	CARPET 2	P-2	PAINT 2
			P-3	PAINT 3
	C-3	(NOT USED)	P-4	PAINT 4
	C-4	(NOT USED)	P-5	PAINT 5
	C-5	(NOT USED)	P-6	PAINT 6
	C-6	CARPET 6	P-7	PAINT 7
	C-7	CARPET 7	P-8	PAINT 8
	C-8	(NOT USED)	P-9	PAINT 9
	C-9	CARPET 9	P-10	PAINT 10
			WC-1	WALLCOVERING 1
	CONC.	SEALED CONCRETE	WC-2	WALLCOVERING 2
	EPX-1	EPOXY RESIN FLOORING 1	WC-3	WALLCOVERING 3
			WC-4	WALLCOVERING 4
	PT-1	PORCELAIN TILE 1 (12"X12")	WC-5	WALLCOVERING 5
	PT-2	PORCELAIN TILE 2 (FLOOR & WALL)	WC-6	WALLCOVERING 6
	PT-3	PORCELAIN TILE 3 (MOSAIC) (FLOOR & WALL)	WT-1	WINDOW TREATMENT 1
			WT-2	WINDOW TREATMENT 2
	PTB-1	PORCELAIN TILE BASE 1	WT-3	WINDOW TREATMENT 3
	PTB-2	PORCELAIN TILE BASE 2	WT-4	WINDOW TREATMENT 4
	QT-1	QUARRY TILE		
	QTB-1	QUARRY TILE BASE	MILLWORK FINISH/MISC.	
	B-1	RESILIENT BASE 1	GL-1	GLASS 1
	B-2	RESILIENT BASE 2	GL-2	GLASS 2
			GL-3	GLASS 3
	RF-1	RESILIENT FLOORING 1	PL-1	PLASTIC LAMINATE 1
	RF-2	RESILIENT FLOORING 2	PL-2	PLASTIC LAMINATE 2
	RF-3	RESILIENT FLOORING 3	PL-3	PLASTIC LAMINATE 3
	RF-4	RESILIENT FLOORING 3	QSF-1	QUARTZ SURFACE
	RF-5	RESILIENT FLOORING 3	SSF-1	SOLID SURFACE 1
			ST-1	STONE 1
	WD-1	WOOD FLOOR 1	ST-2	STONE 2
			HR-1	HANDRAIL 1
			WP-1	WALL PANEL 1
			WP-2	WALL PANEL 2
			WP-3	WALL PANEL 3
			WP-4	WALL PANEL 4
			WPR1	WALL PROTECTION
			WD-2	WOOD 2 (CABINETRY)

SYMBOL

- (X/#) — WALL FINISH
- (X/#) — FLOOR FINISH
- (X/#) — BASE FINISH
- (X/#) — MILLWORK
- FINISH A / NOTCH / FINISH B — FLOOR FINISH TRANSITION

1.- FOR ALL DIMENSIONS TO REVEALS, SEE WALL SECTIONS ON 9/A5.01
2.- FOR WINDOW TYPE DEFINITIONS, SEE PLANS.

Key Notes

Scale N.T.S. 1

WWC OT
Widom Wein Cohen O'Leary Terasawa

3130 Wilshire Boulevard
Sixth Floor
Santa Monica, California 90403
T (310) 828-0040
F (310) 453-9432
www.wwcot.com

Inland Empire
Palm Springs
Moorpark
Shanghai, China

RECEIVED
10:08 am, Aug 14, 2008
FRAMEMAX

Building Department Submittal: June 1, 2007
Issued For Bid: _____
Issued For Construction: _____

KEY PLAN

Project:
Jewish Home for The Aging
FOUNTAINVIEW AT EISENBERG VILLAGE
6440 Wilbur Ave
Reseda, CA. 91335

JEWISH HOME FOR THE AGING
18855 Victory Blvd.
Reseda, CA 91335
Project Number: 04206.00

Basement Finish Plan (North)

Date: 04/05/2007
Drawn By: _____
Checked By: _____

A12.00-A
Sheet No.

File Path & Name: F:\PROJECTS\04206-00\A-CD\SHEETS\A12.00-A.DWG
© WWCOT 2006 May 28, 2007 - 04:00 pm

RECEIVED BY SUFFOLK ON 06/01/07

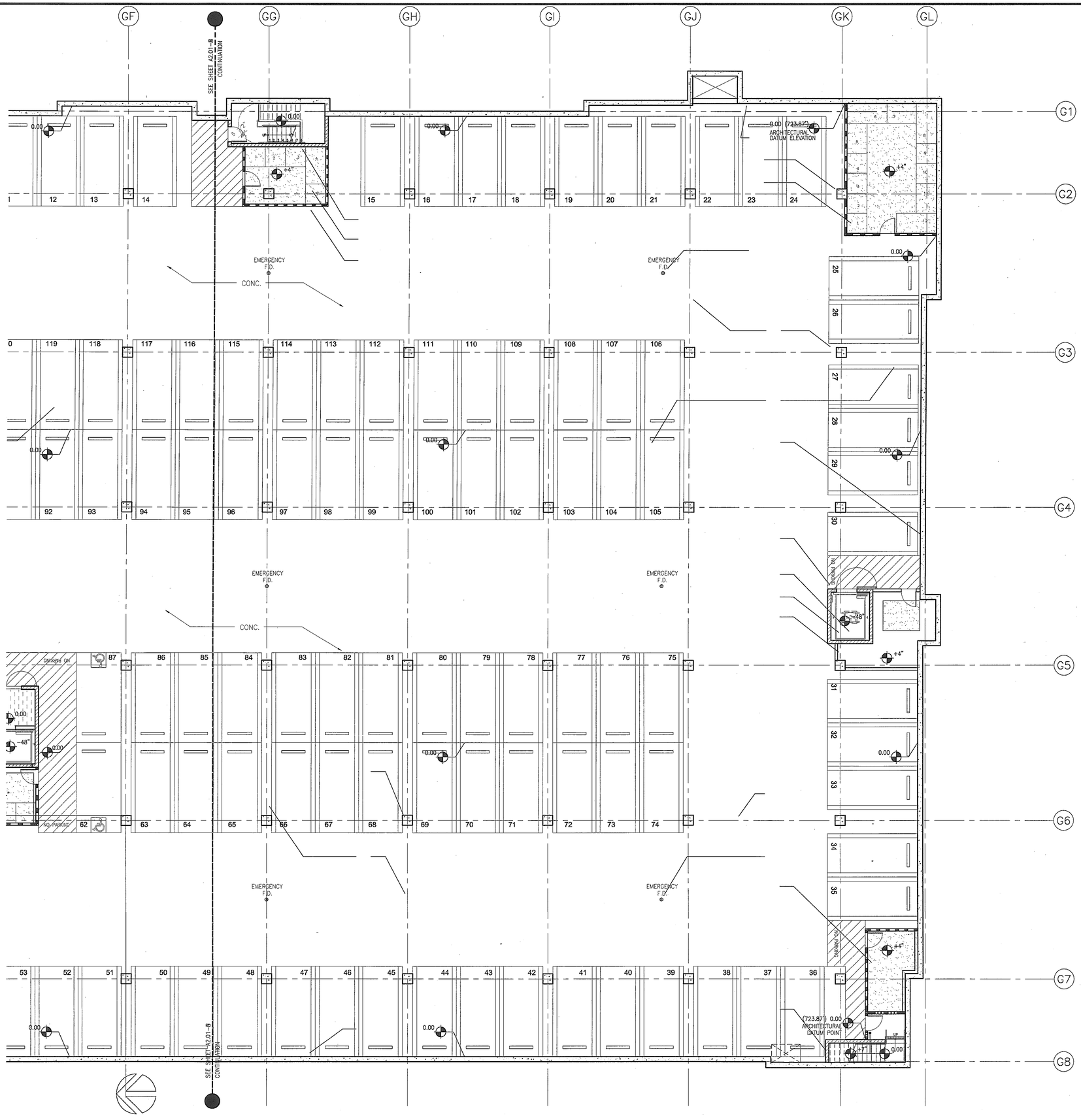

BASEMENT FLOOR FINISH PLAN (SOUTH)

Scale 1/8" = 1'-0" 5

KEYNOTES

1. FLOOR FINISH TO ALIGN W/CEILING ABOVE. G.C. TO USE FULL TILE CARPET WHERE POSSIBLE.
2. LOCATION OF HANDRAIL (HR-1) IN CORRIDORS.

GENERAL NOTES:

1. REFER TO SPECIFICATION BOOK, SECTION 09000: COLORS & MATERIALS FOR ALL SCHEDULED INTERIOR FINISHES.

2. ALL GYP. BD. PARTITIONS & GYP. BD. CEILINGS TO RECEIVE PAINT THROUGHOUT, U.O.N. P-1 TO BE TYPICAL PAINT THROUGHOUT & GYP. BD. CEILING IN COMMON CORRIDORS, U.O.N.
UNITS & COMMON CORRIDOR ABOVE WAINSCOT WALLCOVERING TO BE P-2.

3. ALL BASE IN COMMON AREAS & UNITS TO BE B-1, U.O.N. ALL BASE IN EMPLOYEE AREAS OR BACK OF THE HOUSE TO BE B-2, U.O.N.
CONTRACTOR TO USE WALL BASE FROM COIL/ROLL. CONTRACTOR TO SCORE BACKSIDE FOR CRISP CORNERS.

4. ALL BROADLOOM CARPET TO BE INSTALLED DIRECT GLUED-DOWN. ALL CARPET TILES TO BE INSTALLED QUARTER-TURN.

5. TYP. CORRIDOR TO HAVE WALLCOVERING (WC1) UPTO 31" A.F.F. THROUGHOUT U.O.N.; PROVIDE & INSTALL HANDRAIL (HR1) ON ONE SIDE OF CORRIDOR AND WALLCOVERING WAINSCOT W/ J-MOLD ON THE OTHER SIDE. SEE ELEVATION ON SHEET A11.02.

6. TYPICAL UNIT FINISHES:
FLOORING FINISH- WOODFLOORING (WD-1) IN FOYER & KITCHEN; CARPET (C9) IN DINING, LIVING ROOM & BEDROOM; PORCELAIN TILE (PT-2) IN BATHROOM
WALL FINISH- PAINT (P-2) THROUGHOUT
WINDOW COVERING- WT-2 AT EXTERIOR WINDOW

8. REFER TO SHEET A7.09 FOR ENLARGED RESTROOM FINISH PLAN.

FINISH LEGEND

FLOORING & BASE FINISH

C-1	CARPET 1	
C-2	CARPET 2	
C-3	(NOT USED)	
C-4	(NOT USED)	
C-5	(NOT USED)	
C-6	CARPET 6	
C-7	CARPET 7	
C-8	(NOT USED)	
C-9	CARPET 9	
CONC.	SEALED CONCRETE	
EPX-1	EPOXY RESIN FLOORING 1	
PT-1	PORCELAIN TILE 1 (12"X12")	
PT-2	PORCELAIN TILE 2 (FLOOR & WALL)	
PT-3	PORCELAIN TILE 3 (MOSAIC) (FLOOR & WALL)	
PTB-1	PORCELAIN TILE BASE 1	
PTB-2	PORCELAIN TILE BASE 2	
QT-1	QUARRY TILE	
QTB-1	QUARRY TILE BASE	
B-1	RESILIENT BASE 1	
B-2	RESILIENT BASE 2	
RF-1	RESILIENT FLOORING 1	
RF-2	RESILIENT FLOORING 2	
RF-3	RESILIENT FLOORING 3	
RF-4	RESILIENT FLOORING 3	
RF-5	RESILIENT FLOORING 3	
WD-1	WOOD FLOOR 1	

WALL FINISH

P-1	PAINT 1
P-2	PAINT 2
P-3	PAINT 3
P-4	PAINT 4
P-5	PAINT 5
P-6	PAINT 6
P-7	PAINT 7
P-8	PAINT 8
P-9	PAINT 9
P-10	PAINT 10
WC-1	WALLCOVERING 1
WC-2	WALLCOVERING 2
WC-3	WALLCOVERING 3
WC-4	WALLCOVERING 4
WC-5	WALLCOVERING 5
WC-6	WALLCOVERING 6
WT-1	WINDOW TREATMENT 1
WT-2	WINDOW TREATMENT 2
WT-3	WINDOW TREATMENT 3
WT-4	WINDOW TREATMENT 4

MILLWORK FINISH/MISC.

GL-1	GLASS 1
GL-2	GLASS 2
GL-3	GLASS 3
PL-1	PLASTIC LAMINATE 1
PL-2	PLASTIC LAMINATE 2
PL-3	PLASTIC LAMINATE 3
QSF-1	QUARTZ SURFACE
SSF-1	SOLID SURFACE 1
ST-1	STONE 1
ST-2	STONE 2
HR-1	HANDRAIL 1
WP-1	WALL PANEL 1
WP-2	WALL PANEL 2
WP-3	WALL PANEL 3
WP-4	WALL PANEL 4
WPR1	WALL PROTECTION
WD-2	WOOD 2 (CABINETRY)

SYMBOL

- X/# — WALL FINISH
- X/# — FLOOR FINISH
- X/# — BASE FINISH
- X/# — MILLWORK
- FINISH A / FINISH B — NOTE: FLOOR FINISH TRANSITION
- ALIGN

1.- FOR ALL DIMENSIONS TO REVEALS, SEE WALL SECTIONS ON 9/A5.01
2.- FOR WINDOW TYPE DEFINITIONS, SEE PLANS.

Key Notes

Scale N.T.S. 1

WWC OT
Widom Wein Cohen O'Leary Terasawa

3130 Wilshire Boulevard
Sixth Floor
Santa Monica, California 90403
T (310) 828-0040
F (310) 453-9432
www.wwcot.com

Inland Empire
Palm Springs
Moorpark
Shanghai, China

RECEIVED
10:08 am, Aug 14, 2008
FRAMEMAX

Building Department Submittal: June 1, 2007
Issued For Bid:
Issued For Construction:

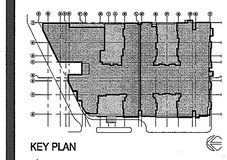

KEY PLAN

Project:
Jewish Home for The Aging
FOUNTAINVIEW AT EISENBERG VILLAGE
6440 Wilbur Ave
Reseda, CA. 91335

JEWISH HOME
JEWISH HOME FOR THE AGING
18855 Victory Blvd.
Reseda, CA 91335
Project Number: 04206.00

Basement Finish Plan (South)

Date: 04/05/2007
Drawn By:
Checked By:

A12.00-B
Sheet No.

File Path & Name: F:\PROJECTS\04206-00\A-CD\SHEETS\A12.00-B.DWG
© WWCOT 2006 May 28, 2007 - 04:00 pm

RECEIVED BY SUFFOLK ON 06/01/07

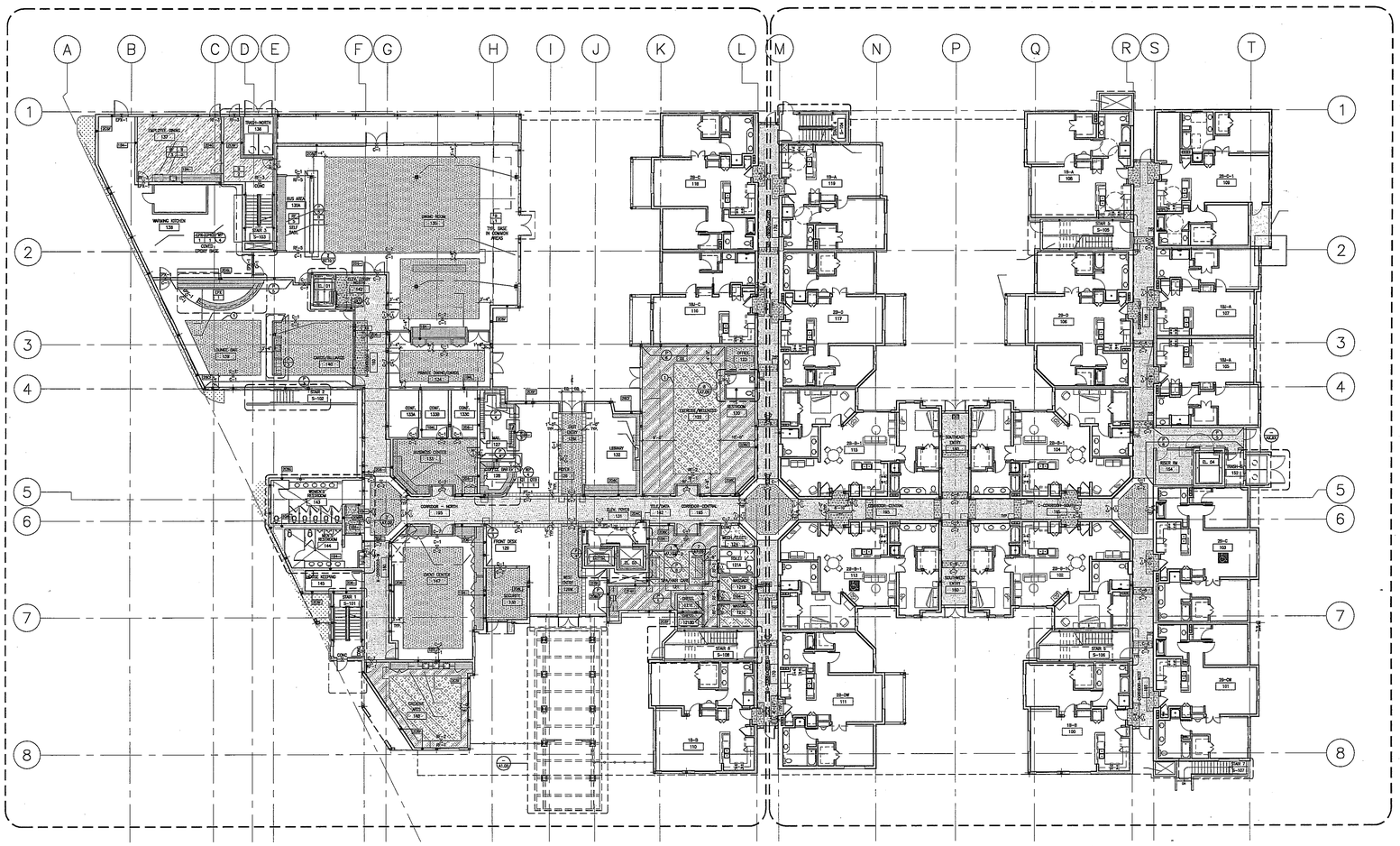

GROUND FLOOR PLAN

Scale 1/16" = 1'-0" | 5

1A NOT USED.

KEYNOTES

1. FLOOR FINISH TO ALIGN W/CEILING ABOVE. G.C. TO USE FULL TILE CARPET WHERE POSSIBLE.
2. LOCATION OF HANDRAIL (HR-1) IN CORRIDORS.

GENERAL NOTES:

1. REFER TO SPECIFICATION BOOK, SECTION 09000: COLORS & MATERIALS FOR ALL SCHEDULED INTERIOR FINISHES.
2. ALL GYP. BD. PARTITIONS & GYP. BD. CEILINGS TO RECEIVE PAINT THROUGHOUT, U.O.N. P-1 TO BE TYPICAL PAINT THROUGHOUT & GYP. BD. CEILING IN COMMON CORRIDORS, U.O.N.
UNITS & COMMON CORRIDOR ABOVE WAINSCOT WALLCOVERING TO BE P-2.
3. ALL BASE IN COMMON AREAS & UNITS TO BE B-1, U.O.N. ALL BASE IN EMPLOYEE AREAS OR BACK OF THE HOUSE TO BE B-2, U.O.N.
CONTRACTOR TO USE WALL BASE FROM COIL/ROLL. CONTRACTOR TO SCORE BACKSIDE FOR CRISP CORNERS.
4. ALL BROADLOOM CARPET TO BE INSTALLED DIRECT GLUED-DOWN. ALL CARPET TILES TO BE INSTALLED QUARTER-TURN.
5. TYP. CORRIDOR TO HAVE WALLCOVERING (WC1) UPTO 31" A.F.F. THROUGHOUT U.O.N.; PROVIDE & INSTALL HANDRAIL (HR1) ON ONE SIDE OF CORRIDOR AND WALLCOVERING WAINSCOT W/ J-MOLD ON THE OTHER SIDE. SEE ELEVATION ON SHEET A11.02.
6. TYPICAL UNIT FINISHES:
FLOORING FINISH- WOODFLOORING (WD-1) IN FOYER & KITCHEN; CARPET (C9) IN DINING, LIVING ROOM & BEDROOM; PORCELAIN TILE (PT-2) IN BATHROOM
WALL FINISH- PAINT (P-2) THROUGHOUT
WINDOW COVERING- WT-2 AT EXTERIOR WINDOW
8. REFER TO SHEET A7.09 FOR ENLARGED RESTROOM FINISH PLAN.

FINISH LEGEND

FLOORING & BASE FINISH		WALL FINISH	
C-1	CARPET 1	P-1	PAINT 1
C-2	CARPET 2	P-2	PAINT 2
		P-3	PAINT 3
C-3	(NOT USED)	P-4	PAINT 4
C-4	(NOT USED)	P-5	PAINT 5
C-5	(NOT USED)	P-6	PAINT 6
		P-7	PAINT 7
C-6	CARPET 6	P-8	PAINT 8
C-7	CARPET 7	P-9	PAINT 9
		P-10	PAINT 10
C-8	(NOT USED)	WC-1	WALLCOVERING 1
C-9	CARPET 9	WC-2	WALLCOVERING 2
CONC.	SEALED CONCRETE	WC-3	WALLCOVERING 3
EPX-1	EPOXY RESIN FLOORING 1	WC-4	WALLCOVERING 4
		WC-5	WALLCOVERING 5
PT-1	PORCELAIN TILE 1 (12"X12")	WC-6	WALLCOVERING 6
PT-2	PORCELAIN TILE 2 (FLOOR & WALL)	WT-1	WINDOW TREATMENT 1
PT-3	PORCELAIN TILE 3 (MOSAIC) (FLOOR & WALL)	WT-2	WINDOW TREATMENT 2
		WT-3	WINDOW TREATMENT 3
PTB-1	PORCELAIN TILE BASE 1	WT-4	WINDOW TREATMENT 4
PTB-2	PORCELAIN TILE BASE 2	MILLWORK FINISH/MISC.	
QT-1	QUARRY TILE		
QTB-1	QUARRY TILE BASE	GL-1	GLASS 1
B-1	RESILIENT BASE 1	GL-2	GLASS 2
B-2	RESILIENT BASE 2	GL-3	GLASS 3
RF-1	RESILIENT FLOORING 1	PL-1	PLASTIC LAMINATE 1
RF-2	RESILIENT FLOORING 2	PL-2	PLASTIC LAMINATE 2
RF-3	RESILIENT FLOORING 3	PL-3	PLASTIC LAMINATE 3
RF-4	RESILIENT FLOORING 3	QSF-1	QUARTZ SURFACE
		SSF-1	SOLID SURFACE 1
RF-5	RESILIENT FLOORING 3	ST-1	STONE 1
		ST-2	STONE 2
WD-1	WOOD FLOOR 1	HR-1	HANDRAIL 1
		WP-1	WALL PANEL 1
		WP-2	WALL PANEL 2
		WP-3	WALL PANEL 3
		WP-4	WALL PANEL 4
		WPR1	WALL PROTECTION
		WD-2	WOOD 2 (CABINETRY)

SYMBOL

- (X/#) — WALL FINISH
- (X/#) — FLOOR FINISH
- (X/#) — BASE FINISH
- (X/#) — MILLWORK
- FINISH A / FINISH B / ALIGN — FLOOR FINISH TRANSITION

NOTE:
1.- FOR ALL DIMENSIONS TO REVEALS, SEE WALL SECTIONS ON 9/A5.01
2.- FOR WINDOW TYPE DEFINITIONS, SEE PLANS.

Key Notes

Scale N.T.S. | 1

WWC OT
Widom Wein Cohen O'Leary Terasawa

3130 Wilshire Boulevard
Sixth Floor
Santa Monica, California 90403
T (310) 828-0040
F (310) 453-9432
www.wwcot.com

Inland Empire
Palm Springs
Moorpark
Shanghai, China

RECEIVED
10:08 am, Aug 14, 2008
FRAMEMAX

Building Department Submittal: June 1, 2007
Issued For Bid:
Issued For Construction:

KEY PLAN

Project:
Jewish Home for The Aging
FOUNTAINVIEW AT EISENBERG VILLAGE
6440 Wilbur Ave
Reseda, CA. 91335

JEWISH HOME FOR THE AGING
18855 Victory Blvd.
Reseda, CA 91335
Project Number: 04206.00

Overall Ground Floor Finish Plan

Date: 04/05/2007
Drawn By:
Checked By:

A12.01
Sheet No.

File Path & Name: F:\PROJECTS\04206.00\A-CD\SHEETS\A12.01.DWG
© WWCOT 2006 May 28, 2007 - 04:00 pm

RECEIVED BY SUFFOLK ON 06/01/07

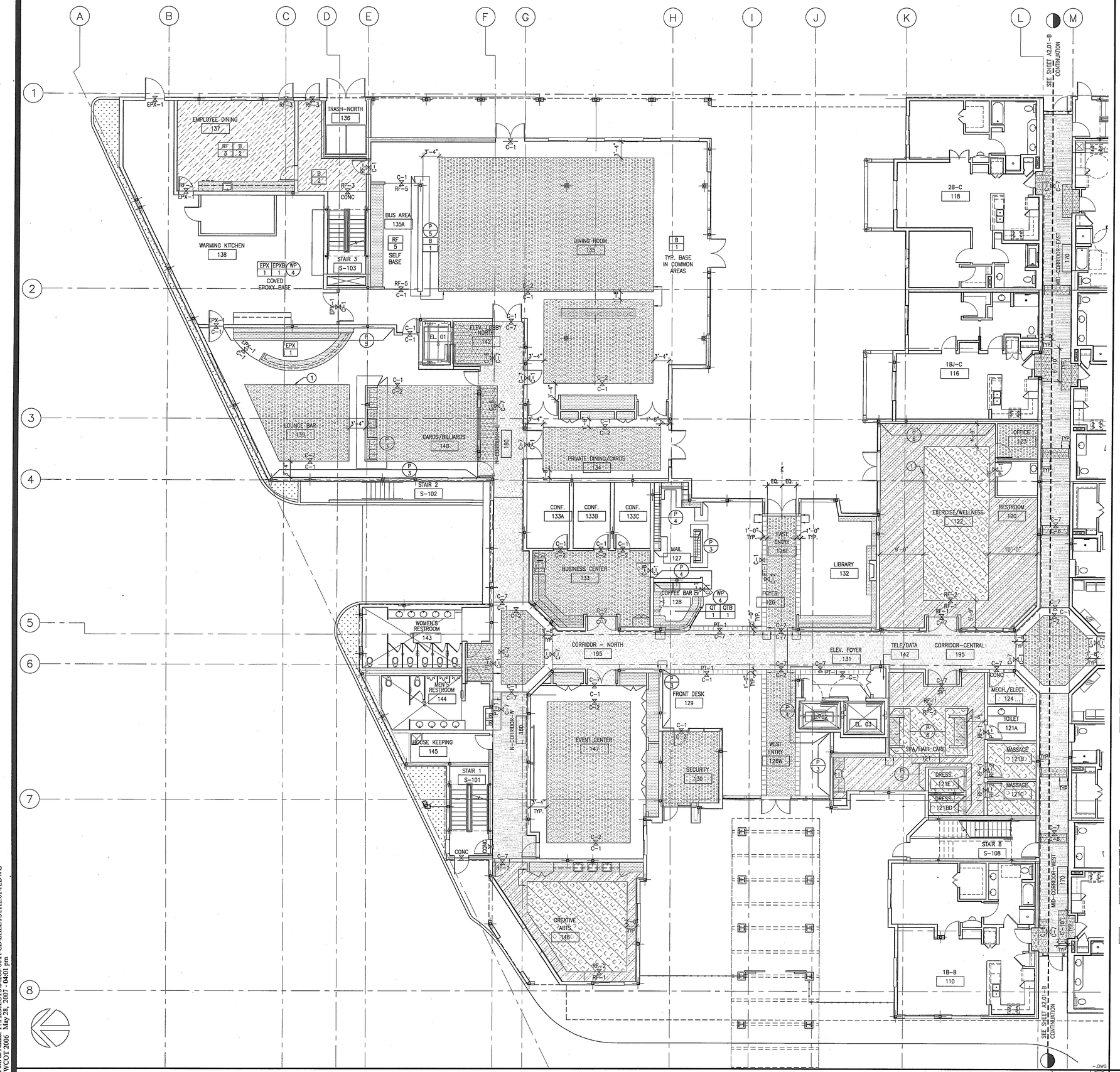

KEYNOTES

1. FLOOR FINISH TO ALIGN W/CEILING ABOVE. G.C. TO USE FULL TILE CARPET WHERE POSSIBLE.
2. LOCATION OF HANDRAIL (HR-1) IN CORRIDORS.

GENERAL NOTES:

1. REFER TO SPECIFICATION BOOK, SECTION 09000: COLORS & MATERIALS FOR ALL SCHEDULED INTERIOR FINISHES.
2. ALL GYP. BD. PARTITIONS & GYP. BD. CEILINGS TO RECEIVE PAINT THROUGHOUT, U.O.N. P-1 TO BE TYPICAL PAINT THROUGHOUT & GYP. BD. CEILING IN COMMON CORRIDORS, U.O.N.
UNITS & COMMON CORRIDOR ABOVE WAINSCOT WALLCOVERING TO BE P-2.
3. ALL BASE IN COMMON AREAS & UNITS TO BE B-1, U.O.N. ALL BASE IN EMPLOYEE AREAS OR BACK OF THE HOUSE TO BE B-2, U.O.N.
CONTRACTOR TO USE WALL BASE FROM COIL/ROLL. CONTRACTOR TO SCORE BACKSIDE FOR CRISP CORNERS.
4. ALL BROADLOOM CARPET TO BE INSTALLED DIRECT GLUED-DOWN. ALL CARPET TILES TO BE INSTALLED QUARTER-TURN.
5. TYP. CORRIDOR TO HAVE WALLCOVERING (WC1) UPTO 31" A.F.F. THROUGHOUT U.O.N.; PROVIDE & INSTALL HANDRAIL (HR1) ON ONE SIDE OF CORRIDOR AND WALLCOVERING WAINSCOT W/ J-MOLD ON THE OTHER SIDE. SEE ELEVATION ON SHEET A11.02.
6. TYPICAL UNIT FINISHES:
FLOORING FINISH- WOODFLOORING (WD-1) IN FOYER & KITCHEN; CARPET (C9) IN DINING, LIVING ROOM & BEDROOM; PORCELAIN TILE (PT-2) IN BATHROOM
WALL FINISH- PAINT (P-2) THROUGHOUT
WINDOW COVERING- WT-2 AT EXTERIOR WINDOW
8. REFER TO SHEET A7.09 FOR ENLARGED RESTROOM FINISH PLAN.

FINISH LEGEND

FLOORING & BASE FINISH

C-1	CARPET 1	
C-2	CARPET 2	
C-3	(NOT USED)	
C-4	(NOT USED)	
C-5	(NOT USED)	
C-6	CARPET 6	
C-7	CARPET 7	
C-8	(NOT USED)	
C-9	CARPET 9	
CONC.	SEALED CONCRETE	
EPX-1	EPOXY RESIN FLOORING 1	
PT-1	PORCELAIN TILE 1 (12"X12")	
PT-2	PORCELAIN TILE 2 (FLOOR & WALL)	
PT-3	PORCELAIN TILE 3 (MOSAIC) (FLOOR & WALL)	
PTB-1	PORCELAIN TILE BASE 1	
PTB-2	PORCELAIN TILE BASE 2	
QT-1	QUARRY TILE	
QTB-1	QUARRY TILE BASE	
B-1	RESILIENT BASE 1	
B-2	RESILIENT BASE 2	
RF-1	RESILIENT FLOORING 1	
RF-2	RESILIENT FLOORING 2	
RF-3	RESILIENT FLOORING 3	
RF-4	RESILIENT FLOORING 3	
RF-5	RESILIENT FLOORING 3	
WD-1	WOOD FLOOR 1	

SYMBOL
- X/# — WALL FINISH
- X/# — FLOOR FINISH
- X/# — BASE FINISH
- X/# — MILLWORK
- FINISH A / NOTE / FINISH B — FLOOR FINISH TRANSITION

WALL FINISH

P-1	PAINT 1
P-2	PAINT 2
P-3	PAINT 3
P-4	PAINT 4
P-5	PAINT 5
P-6	PAINT 6
P-7	PAINT 7
P-8	PAINT 8
P-9	PAINT 9
P-10	PAINT 10
WC-1	WALLCOVERING 1
WC-2	WALLCOVERING 2
WC-3	WALLCOVERING 3
WC-4	WALLCOVERING 4
WC-5	WALLCOVERING 5
WC-6	WALLCOVERING 6
WT-1	WINDOW TREATMENT 1
WT-2	WINDOW TREATMENT 2
WT-3	WINDOW TREATMENT 3
WT-4	WINDOW TREATMENT 4

MILLWORK FINISH/MISC.

GL-1	GLASS 1
GL-2	GLASS 2
GL-3	GLASS 3
PL-1	PLASTIC LAMINATE 1
PL-2	PLASTIC LAMINATE 2
PL-3	PLASTIC LAMINATE 3
QSF-1	QUARTZ SURFACE
SSF-1	SOLID SURFACE 1
ST-1	STONE 1
ST-2	STONE 2
HR-1	HANDRAIL 1
WP-1	WALL PANEL 1
WP-2	WALL PANEL 2
WP-3	WALL PANEL 3
WP-4	WALL PANEL 4
WPR1	WALL PROTECTION
WD-2	WOOD 2 (CABINETRY)

FLOOR FINISH TRANSITION
NOTE:
1.- FOR ALL DIMENSIONS TO REVEALS, SEE WALL SECTIONS ON 9/A5.01
2.- FOR WINDOW TYPE DEFINITIONS, SEE PLANS.

GROUND FLOOR PLAN (NORTH)

Scale 1/8" = 1'-0" 5

Key Notes

Scale N.T.S. 1

WWC OT
Widom Wein Cohen O'Leary Terasawa

3130 Wilshire Boulevard
Sixth Floor
Santa Monica, California 90403
T (310) 828-0040
F (310) 453-9432
www.wwcot.com

Inland Empire
Palm Springs
Moorpark
Shanghai, China

RECEIVED
10:08 am, Aug 14, 2008
FRAMEMAX

Building Department Submittal: June 1, 2007
Issued For Bid:
Issued For Construction:

KEY PLAN

Project:
Jewish Home for The Aging
FOUNTAINVIEW AT EISENBERG VILLAGE
6440 Wilbur Ave
Reseda, CA. 91335

JEWISH HOME FOR THE AGING
18855 Victory Blvd.
Reseda, CA 91335
Project Number: 04206.00

GROUND FLOOR FINISH PLAN (NORTH)

Date: 04/05/2007
Drawn By:
Checked By:

A12.01-A
Sheet No.

File Path & Name: F:\PROJECTS\04206-00\A-CD\SHEETS\A12.01-A.DWG
© WWCOT 2006 May 28, 2007 - 04:01 pm

RECEIVED BY SUFFOLK ON 06/01/07

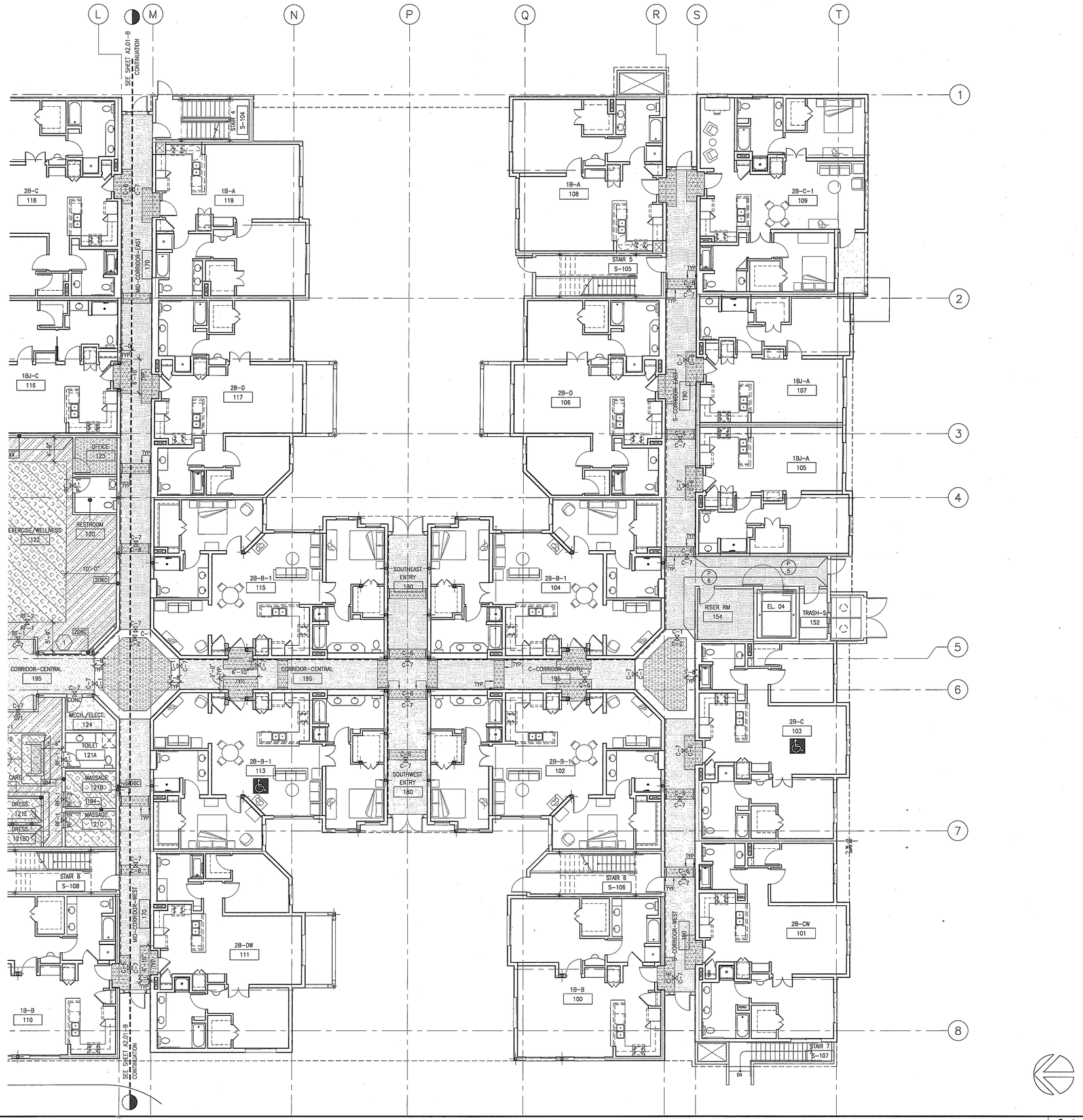

GROUND FLOOR PLAN (SOUTH)

Scale 1/8" = 1'-0" 5

KEYNOTES

1. FLOOR FINISH TO ALIGN W/CEILING ABOVE. G.C. TO USE FULL TILE CARPET WHERE POSSIBLE.
2. LOCATION OF HANDRAIL (HR-1) IN CORRIDORS.

GENERAL NOTES:

1. REFER TO SPECIFICATION BOOK, SECTION 09000: COLORS & MATERIALS FOR ALL SCHEDULED INTERIOR FINISHES.
2. ALL GYP. BD. PARTITIONS & GYP. BD. CEILINGS TO RECEIVE PAINT THROUGHOUT, U.O.N. P-1 TO BE TYPICAL PAINT THROUGHOUT & GYP. BD. CEILING IN COMMON CORRIDORS, U.O.N.
UNITS & COMMON CORRIDOR ABOVE WAINSCOT WALLCOVERING TO BE P-2.
3. ALL BASE IN COMMON AREAS & UNITS TO BE B-1, U.O.N. ALL BASE IN EMPLOYEE AREAS OR BACK OF THE HOUSE TO BE B-2, U.O.N.
CONTRACTOR TO USE WALL BASE FROM COIL/ROLL. CONTRACTOR TO SCORE BACKSIDE FOR CRISP CORNERS.
4. ALL BROADLOOM CARPET TO BE INSTALLED DIRECT GLUED-DOWN. ALL CARPET TILES TO BE INSTALLED QUARTER-TURN.
5. TYP. CORRIDOR TO HAVE WALLCOVERING (WC1) UPTO 31" A.F.F. THROUGHOUT U.O.N.; PROVIDE & INSTALL HANDRAIL (HR1) ON ONE SIDE OF CORRIDOR AND WALLCOVERING WAINSCOT W/ J-MOLD ON THE OTHER SIDE. SEE ELEVATION ON SHEET A11.02.
6. TYPICAL UNIT FINISHES:
FLOORING FINISH- WOODFLOORING (WD-1) IN FOYER & KITCHEN; CARPET (C9) IN DINING, LIVING ROOM & BEDROOM; PORCELAIN TILE (PT-2) IN BATHROOM
WALL FINISH- PAINT (P-2) THROUGHOUT
WINDOW COVERING- WT-2 AT EXTERIOR WINDOW
8. REFER TO SHEET A7.09 FOR ENLARGED RESTROOM FINISH PLAN.

FINISH LEGEND

FLOORING & BASE FINISH		WALL FINISH	
C-1	CARPET 1	P-1	PAINT 1
C-2	CARPET 2	P-2	PAINT 2
C-3	(NOT USED)	P-3	PAINT 3
C-4	(NOT USED)	P-4	PAINT 4
C-5	(NOT USED)	P-5	PAINT 5
C-6	CARPET 6	P-6	PAINT 6
C-7	CARPET 7	P-7	PAINT 7
C-8	(NOT USED)	P-8	PAINT 8
C-9	CARPET 9	P-9	PAINT 9
CONC.	SEALED CONCRETE	P-10	PAINT 10
EPX-1	EPOXY RESIN FLOORING 1	WC-1	WALLCOVERING 1
PT-1	PORCELAIN TILE 1 (12"X12")	WC-2	WALLCOVERING 2
PT-2	PORCELAIN TILE 2 (FLOOR & WALL)	WC-3	WALLCOVERING 3
PT-3	PORCELAIN TILE 3 (MOSAIC) (FLOOR & WALL)	WC-4	WALLCOVERING 4
PTB-1	PORCELAIN TILE BASE 1	WC-5	WALLCOVERING 5
PTB-2	PORCELAIN TILE BASE 2	WC-6	WALLCOVERING 6
QT-1	QUARRY TILE	WT-1	WINDOW TREATMENT 1
QTB-1	QUARRY TILE BASE	WT-2	WINDOW TREATMENT 2
B-1	RESILIENT BASE 1	WT-3	WINDOW TREATMENT 3
B-2	RESILIENT BASE 2	WT-4	WINDOW TREATMENT 4
RF-1	RESILIENT FLOORING 1	MILLWORK FINISH/MISC.	
RF-2	RESILIENT FLOORING 2	GL-1	GLASS 1
RF-3	RESILIENT FLOORING 3	GL-2	GLASS 2
RF-4	RESILIENT FLOORING 3	GL-3	GLASS 3
RF-5	RESILIENT FLOORING 3	PL-1	PLASTIC LAMINATE 1
WD-1	WOOD FLOOR 1	PL-2	PLASTIC LAMINATE 2
		PL-3	PLASTIC LAMINATE 3
		QSF-1	QUARTZ SURFACE
		SSF-1	SOLID SURFACE 1
		ST-1	STONE 1
		ST-2	STONE 2
		HR-1	HANDRAIL 1
		WP-1	WALL PANEL 1
		WP-2	WALL PANEL 2
		WP-3	WALL PANEL 3
		WP-4	WALL PANEL 4
		WPR1	WALL PROTECTION
		WD-2	WOOD 2 (CABINETRY)

SYMBOL
- X/# — WALL FINISH
- X/# — FLOOR FINISH
- X/# — BASE FINISH
- X/# — MILLWORK

FINISH A ABOVE, FINISH B BELOW — FLOOR FINISH TRANSITION

NOTE:
1.- FOR ALL DIMENSIONS TO REVEALS, SEE WALL SECTIONS ON 9/A5.01
2.- FOR WINDOW TYPE DEFINITIONS, SEE PLANS.

Finish Plan Legends & Key Notes

Scale N.T.S. 1

WWC OT
Widom Wein Cohen O'Leary Terasawa

3130 Wilshire Boulevard
Sixth Floor
Santa Monica, California 90403
T (310) 828-0040
F (310) 453-9432
www.wwcot.com

Inland Empire
Palm Springs
Moorpark
Shanghai, China

RECEIVED
10:08 am, Aug 14, 2008
FRAMEMAX

Building Department Submittal: June 1, 2007
Issued For Bid: _____
Issued For Construction: _____

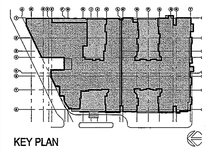

KEY PLAN

Project:
Jewish Home for The Aging

FOUNTAINVIEW AT EISENBERG VILLAGE

6440 Wilbur Ave
Reseda, CA. 91335

JEWISH HOME

JEWISH HOME FOR THE AGING
18855 Victory Blvd.
Reseda, CA 91335

Project Number: 04206.00

Ground Floor Finish Plan (South)

Date: 04/05/2007
Drawn By: _____
Checked By: _____

A12.01-B

Sheet No.

File Path & Name: F:\PROJECTS\04206.00\A-CD\SHEETS\A12.01-B.DWG
© WWCOT 2006 May 28, 2007 - 04:01 pm

RECEIVED BY SUFFOLK ON 06/01/07

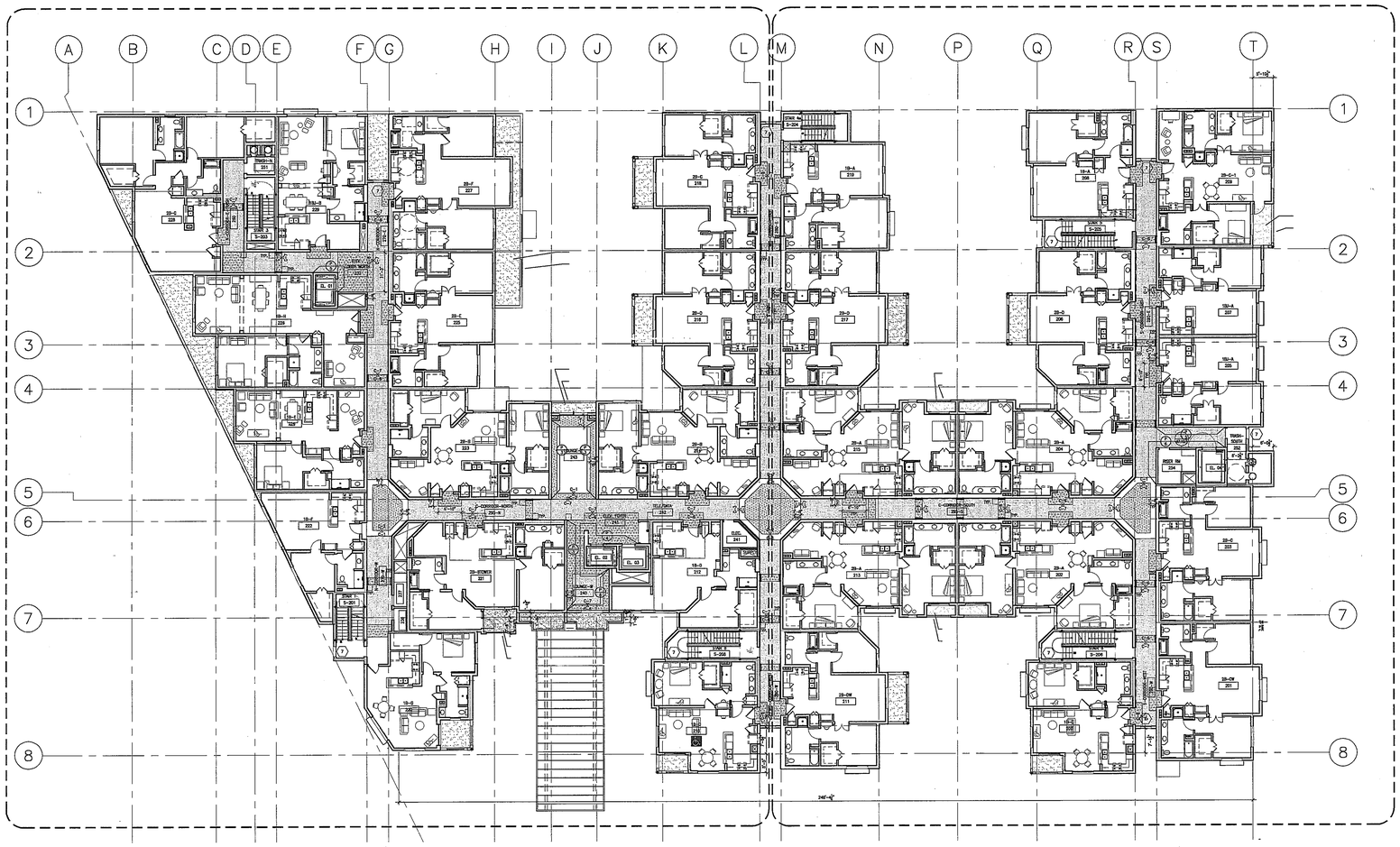

SECOND FLOOR PLAN

Scale 1/16" = 1'-0" 5

KEYNOTES

1. FLOOR FINISH TO ALIGN W/CEILING ABOVE. G.C. TO USE FULL TILE CARPET WHERE POSSIBLE.
2. LOCATION OF HANDRAIL (HR-1) IN CORRIDORS.

GENERAL NOTES:

1. REFER TO SPECIFICATION BOOK, SECTION 09000: COLORS & MATERIALS FOR ALL SCHEDULED INTERIOR FINISHES.

2. ALL GYP. BD. PARTITIONS & GYP. BD. CEILINGS TO RECEIVE PAINT THROUGHOUT, U.O.N. P-1 TO BE TYPICAL PAINT THROUGHOUT & GYP. BD. CEILING IN COMMON CORRIDORS, U.O.N.
UNITS & COMMON CORRIDOR ABOVE WAINSCOT WALLCOVERING TO BE P-2.

3. ALL BASE IN COMMON AREAS & UNITS TO BE B-1, U.O.N. ALL BASE IN EMPLOYEE AREAS OR BACK OF THE HOUSE TO BE B-2, U.O.N.
CONTRACTOR TO USE WALL BASE FROM COIL/ROLL. CONTRACTOR TO SCORE BACKSIDE FOR CRISP CORNERS.

4. ALL BROADLOOM CARPET TO BE INSTALLED DIRECT GLUED-DOWN. ALL CARPET TILES TO BE INSTALLED QUARTER-TURN.

5. TYP. CORRIDOR TO HAVE WALLCOVERING (WC1) UPTO 31" A.F.F. THROUGHOUT U.O.N.; PROVIDE & INSTALL HANDRAIL (HR1) ON ONE SIDE OF CORRIDOR AND WALLCOVERING WAINSCOT W/ J-MOLD ON THE OTHER SIDE. SEE ELEVATION ON SHEET A11.02.

6. TYPICAL UNIT FINISHES:
FLOORING FINISH- WOODFLOORING (WD-1) IN FOYER & KITCHEN; CARPET (C9) IN DINING, LIVING ROOM & BEDROOM; PORCELAIN TILE (PT-2) IN BATHROOM
WALL FINISH- PAINT (P-2) THROUGHOUT
WINDOW COVERING- WT-2 AT EXTERIOR WINDOW

8. REFER TO SHEET A7.09 FOR ENLARGED RESTROOM FINISH PLAN.

FINISH LEGEND

FLOORING & BASE FINISH			WALL FINISH	
C-1	CARPET 1		P-1	PAINT 1
C-2	CARPET 2		P-2	PAINT 2
C-3	(NOT USED)		P-3	PAINT 3
C-4	(NOT USED)		P-4	PAINT 4
C-5	(NOT USED)		P-5	PAINT 5
C-6	CARPET 6		P-6	PAINT 6
C-7	CARPET 7		P-7	PAINT 7
C-8	(NOT USED)		P-8	PAINT 8
C-9	CARPET 9		P-9	PAINT 9
CONC.	SEALED CONCRETE		P-10	PAINT 10
EPX-1	EPOXY RESIN FLOORING 1		WC-1	WALLCOVERING 1
PT-1	PORCELAIN TILE 1 (12"X12")		WC-2	WALLCOVERING 2
PT-2	PORCELAIN TILE 2 (FLOOR & WALL)		WC-3	WALLCOVERING 3
PT-3	PORCELAIN TILE 3 (MOSAIC) (FLOOR & WALL)		WC-4	WALLCOVERING 4
PTB-1	PORCELAIN TILE BASE 1		WC-5	WALLCOVERING 5
PTB-2	PORCELAIN TILE BASE 2		WC-6	WALLCOVERING 6
QT-1	QUARRY TILE		WT-1	WINDOW TREATMENT 1
QTB-1	QUARRY TILE BASE		WT-2	WINDOW TREATMENT 2
B-1	RESILIENT BASE 1		WT-3	WINDOW TREATMENT 3
B-2	RESILIENT BASE 2		WT-4	WINDOW TREATMENT 4
RF-1	RESILIENT FLOORING 1	MILLWORK FINISH/MISC.		
RF-2	RESILIENT FLOORING 2		GL-1	GLASS 1
RF-3	RESILIENT FLOORING 3		GL-2	GLASS 2
RF-4	RESILIENT FLOORING 3		GL-3	GLASS 3
RF-5	RESILIENT FLOORING 3		PL-1	PLASTIC LAMINATE 1
WD-1	WOOD FLOOR 1		PL-2	PLASTIC LAMINATE 2
			PL-3	PLASTIC LAMINATE 3
			QSF-1	QUARTZ SURFACE
			SSF-1	SOLID SURFACE 1
			ST-1	STONE 1
			ST-2	STONE 2
		HR-1	HANDRAIL 1	
			WP-1	WALL PANEL 1
			WP-2	WALL PANEL 2
			WP-3	WALL PANEL 3
			WP-4	WALL PANEL 4
			WPR1	WALL PROTECTION
			WD-2	WOOD 2 (CABINETRY)

SYMBOL

X/F — WALL FINISH
X/F — FLOOR FINISH
X/F — BASE FINISH
X/F — MILLWORK
FINISH A / FINISH B — FLOOR FINISH TRANSITION
ALIGN

NOTE:
1.- FOR ALL DIMENSIONS TO REVEALS, SEE WALL SECTIONS ON 9/A5.01
2.- FOR WINDOW TYPE DEFINITIONS, SEE PLANS.

Key Notes

Scale N.T.S. 1

WWC OT
Widom Wein Cohen O'Leary Terasawa

3130 Wilshire Boulevard
Sixth Floor
Santa Monica, California 90403
T (310) 828-0040
F (310) 453-9432
www.wwcot.com

Inland Empire
Palm Springs
Moorpark
Shanghai, China

RECEIVED
10:08 am, Aug 14, 2008
FRAMEMAX

Building Department Submittal: June 1, 2007
Issued For Bid:
Issued For Construction:

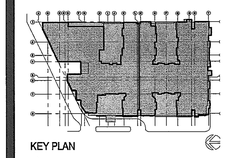

KEY PLAN

Project:
Jewish Home for The Aging
FOUNTAINVIEW AT EISENBERG VILLAGE
6440 Wilbur Ave
Reseda, CA. 91335

JEWISH HOME
JEWISH HOME FOR THE AGING
18855 Victory Blvd.
Reseda, CA 91335

Project Number: 04206.00

Overall Typical Floor Finish Plan

Date: 04/05/2007
Drawn By:
Checked By:

A12.02
Sheet No.

File Path & Name: F:\PROJECTS\04206-00\A-CD\SHEETS\A12.02.DWG
© WWCOT 2006 May 28, 2007 - 04:01 pm

RECEIVED BY SUFFOLK ON 06/01/07

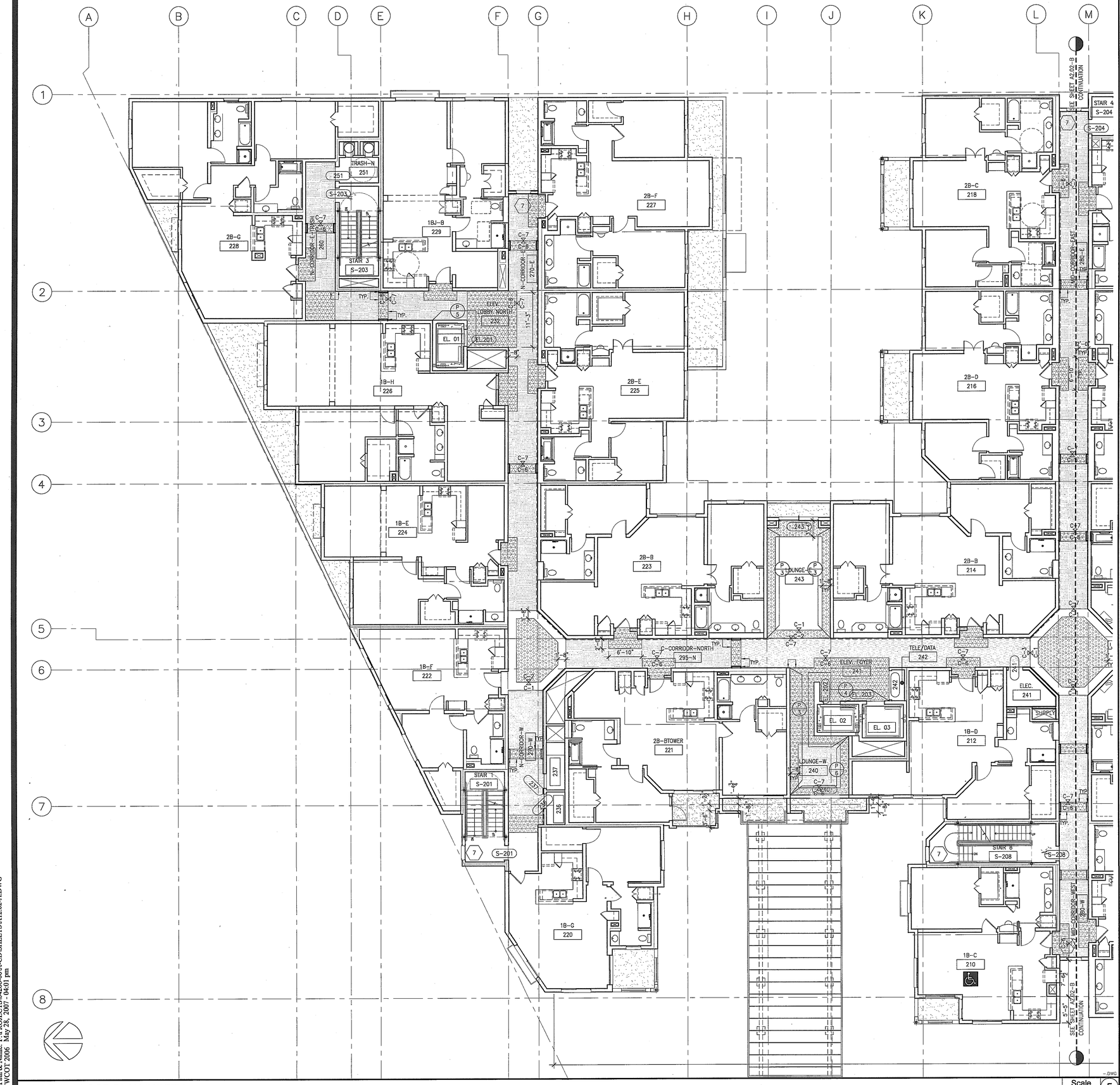

SECOND FLOOR PLAN (NORTH)

Scale 1/8" = 1'-0" 5

KEYNOTES

1. FLOOR FINISH TO ALIGN W/CEILING ABOVE. G.C. TO USE FULL TILE CARPET WHERE POSSIBLE.
2. LOCATION OF HANDRAIL (HR-1) IN CORRIDORS.

GENERAL NOTES:

1. REFER TO SPECIFICATION BOOK, SECTION 09000: COLORS & MATERIALS FOR ALL SCHEDULED INTERIOR FINISHES.

2. ALL GYP. BD. PARTITIONS & GYP. BD. CEILINGS TO RECEIVE PAINT THROUGHOUT, U.O.N. P-1 TO BE TYPICAL PAINT THROUGHOUT & GYP. BD. CEILING IN COMMON CORRIDORS, U.O.N.
UNITS & COMMON CORRIDOR ABOVE WAINSCOT WALLCOVERING TO BE P-2.

3. ALL BASE IN COMMON AREAS & UNITS TO BE B-1, U.O.N. ALL BASE IN EMPLOYEE AREAS OR BACK OF THE HOUSE TO BE B-2, U.O.N.
CONTRACTOR TO USE WALL BASE FROM COIL/ROLL. CONTRACTOR TO SCORE BACKSIDE FOR CRISP CORNERS.

4. ALL BROADLOOM CARPET TO BE INSTALLED DIRECT GLUED-DOWN. ALL CARPET TILES TO BE INSTALLED QUARTER-TURN.

5. TYP. CORRIDOR TO HAVE WALLCOVERING (WC1) UPTO 31" A.F.F. THROUGHOUT U.O.N.; PROVIDE & INSTALL HANDRAIL (HR1) ON ONE SIDE OF CORRIDOR AND WALLCOVERING WAINSCOT W/ J-MOLD ON THE OTHER SIDE. SEE ELEVATION ON SHEET A11.02.

6. TYPICAL UNIT FINISHES:
FLOORING FINISH- WOODFLOORING (WD-1) IN FOYER & KITCHEN; CARPET (C9) IN DINING, LIVING ROOM & BEDROOM; PORCELAIN TILE (PT-2) IN BATHROOM
WALL FINISH- PAINT (P-2) THROUGHOUT
WINDOW COVERING- WT-2 AT EXTERIOR WINDOW

8. REFER TO SHEET A7.09 FOR ENLARGED RESTROOM FINISH PLAN.

FINISH LEGEND

FLOORING & BASE FINISH			WALL FINISH	
	C-1	CARPET 1	P-1	PAINT 1
	C-2	CARPET 2	P-2	PAINT 2
	C-3	(NOT USED)	P-3	PAINT 3
	C-4	(NOT USED)	P-4	PAINT 4
	C-5	(NOT USED)	P-5	PAINT 5
	C-6	CARPET 6	P-6	PAINT 6
	C-7	CARPET 7	P-7	PAINT 7
	C-8	(NOT USED)	P-8	PAINT 8
	C-9	CARPET 9	P-9	PAINT 9
	CONC.	SEALED CONCRETE	P-10	PAINT 10
	EPX-1	EPOXY RESIN FLOORING 1	WC-1	WALLCOVERING 1
	PT-1	PORCELAIN TILE 1 (12"X12")	WC-2	WALLCOVERING 2
	PT-2	PORCELAIN TILE 2 (FLOOR & WALL)	WC-3	WALLCOVERING 3
	PT-3	PORCELAIN TILE 3 (MOSAIC) (FLOOR & WALL)	WC-4	WALLCOVERING 4
	PTB-1	PORCELAIN TILE BASE 1	WC-5	WALLCOVERING 5
	PTB-2	PORCELAIN TILE BASE 2	WC-6	WALLCOVERING 6
	QT-1	QUARRY TILE	WT-1	WINDOW TREATMENT 1
	QTB-1	QUARRY TILE BASE	WT-2	WINDOW TREATMENT 2
	B-1	RESILIENT BASE 1	WT-3	WINDOW TREATMENT 3
	B-2	RESILIENT BASE 2	WT-4	WINDOW TREATMENT 4
	RF-1	RESILIENT FLOORING 1	MILLWORK FINISH/MISC.	
	RF-2	RESILIENT FLOORING 2	GL-1	GLASS 1
	RF-3	RESILIENT FLOORING 3	GL-2	GLASS 2
	RF-4	RESILIENT FLOORING 3	GL-3	GLASS 3
	RF-5	RESILIENT FLOORING 3	PL-1	PLASTIC LAMINATE 1
	WD-1	WOOD FLOOR 1	PL-2	PLASTIC LAMINATE 2
			PL-3	PLASTIC LAMINATE 3
			QSF-1	QUARTZ SURFACE
			SSF-1	SOLID SURFACE 1
			ST-1	STONE 1
			ST-2	STONE 2
			HR-1	HANDRAIL 1
			WP-1	WALL PANEL 1
			WP-2	WALL PANEL 2
			WP-3	WALL PANEL 3
			WP-4	WALL PANEL 4
			WPR1	WALL PROTECTION
			WD-2	WOOD 2 (CABINETRY)

SYMBOL
X/# — WALL FINISH
X/# — FLOOR FINISH
X/# — BASE FINISH
X/# — MILLWORK

FINISH A / FINISH B — FLOOR FINISH TRANSITION
NOTE: 1.- FOR ALL DIMENSIONS TO REVEALS, SEE WALL SECTIONS ON 9/A5.01
2.- FOR WINDOW TYPE DEFINITIONS, SEE PLANS.
ALIGN

Key Notes

Scale N.T.S. 1

WWC OT
Widom Wein Cohen O'Leary Terasawa
3130 Wilshire Boulevard
Sixth Floor
Santa Monica, California 90403
T (310) 828-0040
F (310) 453-9432
www.wwcot.com
Inland Empire
Palm Springs
Moorpark
Shanghai, China

RECEIVED
10:08 am, Aug 14, 2008
FRAMEMAX

Building Department Submittal: June 1, 2007
Issued For Bid: _____
Issued For Construction: _____

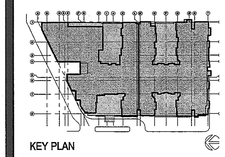

KEY PLAN

Project:
Jewish Home for The Aging
FOUNTAINVIEW AT EISENBERG VILLAGE
6440 Wilbur Ave
Reseda, CA. 91335
JEWISH HOME
JEWISH HOME FOR THE AGING
18855 Victory Blvd.
Reseda, CA 91335
Project Number: 04206.00

Typical Floor Finish Plan (North)

Date: 04/05/2007
Drawn By: _____
Checked By: _____

A12.02-A
Sheet No.

File Path & Name: F:\PROJECTS\04206-00\A-CD\SHEETS\A12.02-A.DWG
© WWCOT 2006 May 28, 2007 - 04:01 pm

RECEIVED BY SUFFOLK ON 06/01/07

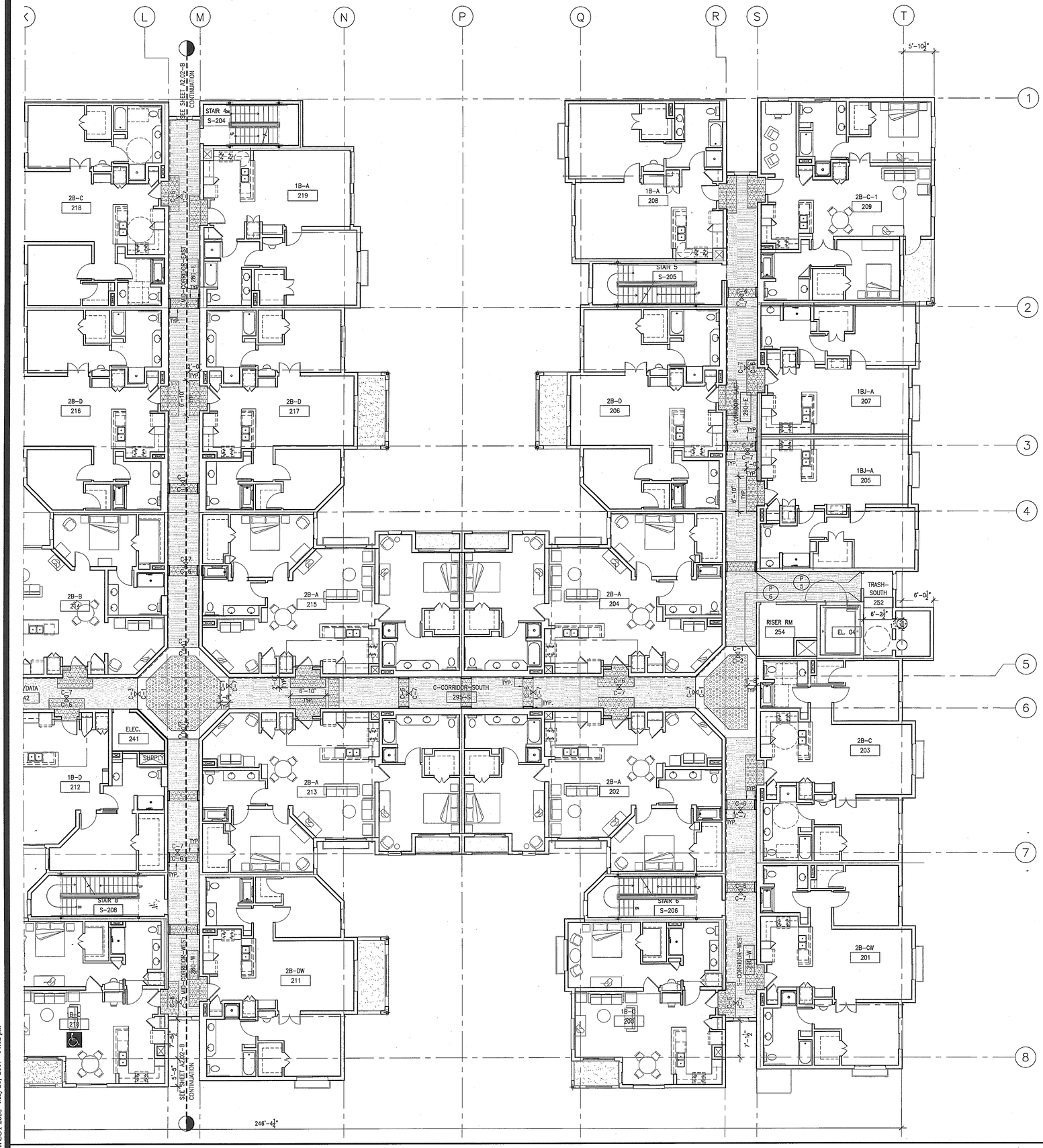

1A NOT USED.

KEYNOTES

1. FLOOR FINISH TO ALIGN W/CEILING ABOVE. G.C. TO USE FULL TILE CARPET WHERE POSSIBLE.
2. LOCATION OF HANDRAIL (HR-1) IN CORRIDORS.

GENERAL NOTES:

1. REFER TO SPECIFICATION BOOK, SECTION 09000: COLORS & MATERIALS FOR ALL SCHEDULED INTERIOR FINISHES.

2. ALL GYP. BD. PARTITIONS & GYP. BD. CEILINGS TO RECEIVE PAINT THROUGHOUT, U.O.N. P-1 TO BE TYPICAL PAINT THROUGHOUT & GYP. BD. CEILING IN COMMON CORRIDORS, U.O.N.
UNITS & COMMON CORRIDOR ABOVE WAINSCOT WALLCOVERING TO BE P-2.

3. ALL BASE IN COMMON AREAS & UNITS TO BE B-1, U.O.N. ALL BASE IN EMPLOYEE AREAS OR BACK OF THE HOUSE TO BE B-2, U.O.N.
CONTRACTOR TO USE WALL BASE FROM COIL/ROLL. CONTRACTOR TO SCORE BACKSIDE FOR CRISP CORNERS.

4. ALL BROADLOOM CARPET TO BE INSTALLED DIRECT GLUED-DOWN. ALL CARPET TILES TO BE INSTALLED QUARTER-TURN.

5. TYP. CORRIDOR TO HAVE WALLCOVERING (WC1) UPTO 31" A.F.F. THROUGHOUT U.O.N.; PROVIDE & INSTALL HANDRAIL (HR1) ON ONE SIDE OF CORRIDOR AND WALLCOVERING WAINSCOT W/ J-MOLD ON THE OTHER SIDE. SEE ELEVATION ON SHEET A11.02.

6. TYPICAL UNIT FINISHES:
FLOORING FINISH- WOODFLOORING (WD-1) IN FOYER & KITCHEN; CARPET (C9) IN DINING, LIVING ROOM & BEDROOM; PORCELAIN TILE (PT-2) IN BATHROOM
WALL FINISH- PAINT (P-2) THROUGHOUT
WINDOW COVERING- WT-2 AT EXTERIOR WINDOW

8. REFER TO SHEET A7.09 FOR ENLARGED RESTROOM FINISH PLAN.

FINISH LEGEND

FLOORING & BASE FINISH		WALL FINISH	
C-1	CARPET 1	P-1	PAINT 1
C-2	CARPET 2	P-2	PAINT 2
C-3	(NOT USED)	P-3	PAINT 3
C-4	(NOT USED)	P-4	PAINT 4
C-5	(NOT USED)	P-5	PAINT 5
C-6	CARPET 6	P-6	PAINT 6
C-7	CARPET 7	P-7	PAINT 7
C-8	(NOT USED)	P-8	PAINT 8
C-9	CARPET 9	P-9	PAINT 9
CONC.	SEALED CONCRETE	P-10	PAINT 10
EPX-1	EPOXY RESIN FLOORING 1	WC-1	WALLCOVERING 1
PT-1	PORCELAIN TILE 1 (12"X12")	WC-2	WALLCOVERING 2
PT-2	PORCELAIN TILE 2 (FLOOR & WALL)	WC-3	WALLCOVERING 3
PT-3	PORCELAIN TILE 3 (MOSAIC) (FLOOR & WALL)	WC-4	WALLCOVERING 4
PTB-1	PORCELAIN TILE BASE 1	WC-5	WALLCOVERING 5
PTB-2	PORCELAIN TILE BASE 2	WC-6	WALLCOVERING 6
QT-1	QUARRY TILE	WT-1	WINDOW TREATMENT 1
QTB-1	QUARRY TILE BASE	WT-2	WINDOW TREATMENT 2
B-1	RESILIENT BASE 1	WT-3	WINDOW TREATMENT 3
B-2	RESILIENT BASE 2	WT-4	WINDOW TREATMENT 4
RF-1	RESILIENT FLOORING 1	MILLWORK FINISH/MISC.	
RF-2	RESILIENT FLOORING 2	GL-1	GLASS 1
RF-3	RESILIENT FLOORING 3	GL-2	GLASS 2
RF-4	RESILIENT FLOORING 3	GL-3	GLASS 3
RF-5	RESILIENT FLOORING 3	PL-1	PLASTIC LAMINATE 1
WD-1	WOOD FLOOR 1	PL-2	PLASTIC LAMINATE 2
		PL-3	PLASTIC LAMINATE 3
		QSF-1	QUARTZ SURFACE
		SSF-1	SOLID SURFACE 1
		ST-1	STONE 1
		ST-2	STONE 2
		HR-1	HANDRAIL 1
		WP-1	WALL PANEL 1
		WP-2	WALL PANEL 2
		WP-3	WALL PANEL 3
		WP-4	WALL PANEL 4
		WPR1	WALL PROTECTION
		WD-2	WOOD 2 (CABINETRY)

SYMBOL

X/# — WALL FINISH
X/# — FLOOR FINISH
X/# — BASE FINISH
X/# — MILLWORK
FINISH A TO FINISH B — FLOOR FINISH TRANSITION

NOTES:
1.- FOR ALL DIMENSIONS TO REVEALS, SEE WALL SECTIONS ON 9/A5.01
2. FOR WINDOW TYPE DEFINITIONS, SEE PLANS.
3. ALIGN

WWC OT
Widom Wein Cohen O'Leary Terasawa

3130 Wilshire Boulevard
Sixth Floor
Santa Monica, California 90403
T (310) 828-0040
F (310) 453-9432
www.wwcot.com

Inland Empire
Palm Springs
Moorpark
Shanghai, China

RECEIVED
10:08 am, Aug 14, 2008
FRAMEMAX

Building Department Submittal: June 1, 2007
Issued For Bid: _____
Issued For Construction: _____

KEY PLAN

Project:
Jewish Home for The Aging
FOUNTAINVIEW AT EISENBERG VILLAGE
6440 Wilbur Ave
Reseda, CA. 91335

JEWISH HOME
JEWISH HOME FOR THE AGING
18855 Victory Blvd.
Reseda, CA 91335
Project Number: 04206.00

Second Floor Finish Plan (South)

Date: 04/05/2007
Drawn By: _____
Checked By: _____

A12.02-B
Sheet No.

SECOND FLOOR PLAN (SOUTH) — Scale 1/8" = 1'-0" — 5

Key Notes — Scale N.T.S. — 1

File Path & Name: F:\PROJECTS\04206-00\A-CD\SHEETS\A12.02-B.DWG
© WWCOT 2006 May 28, 2007 - 04:02 pm

RECEIVED BY SUFFOLK ON 06/01/07

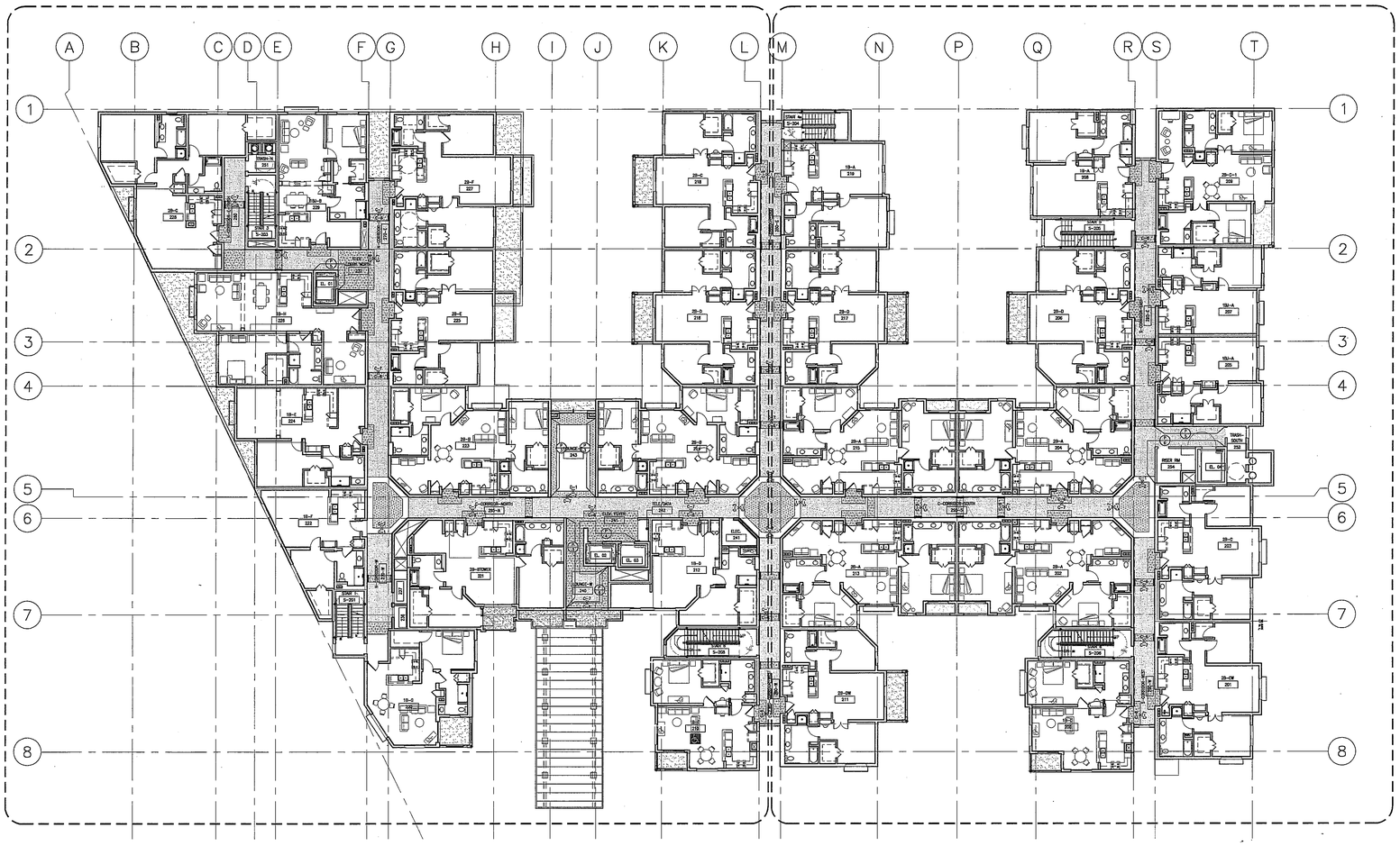

KEYNOTES

1. FLOOR FINISH TO ALIGN W/CEILING ABOVE. G.C. TO USE FULL TILE CARPET WHERE POSSIBLE.
2. LOCATION OF HANDRAIL (HR-1) IN CORRIDORS.

GENERAL NOTES:

1. REFER TO SPECIFICATION BOOK, SECTION 09000: COLORS & MATERIALS FOR ALL SCHEDULED INTERIOR FINISHES.

2. ALL GYP. BD. PARTITIONS & GYP. BD. CEILINGS TO RECEIVE PAINT THROUGHOUT, U.O.N. P-1 TO BE TYPICAL PAINT THROUGHOUT & GYP. BD. CEILING IN COMMON CORRIDORS, U.O.N.
UNITS & COMMON CORRIDOR ABOVE WAINSCOT WALLCOVERING TO BE P-2.

3. ALL BASE IN COMMON AREAS & UNITS TO BE B-1, U.O.N. ALL BASE IN EMPLOYEE AREAS OR BACK OF THE HOUSE TO BE B-2, U.O.N.
CONTRACTOR TO USE WALL BASE FROM COIL/ROLL. CONTRACTOR TO SCORE BACKSIDE FOR CRISP CORNERS.

4. ALL BROADLOOM CARPET TO BE INSTALLED DIRECT GLUED-DOWN. ALL CARPET TILES TO BE INSTALLED QUARTER-TURN.

5. TYP. CORRIDOR TO HAVE WALLCOVERING (WC1) UPTO 31" A.F.F. THROUGHOUT U.O.N.; PROVIDE & INSTALL HANDRAIL (HR1) ON ONE SIDE OF CORRIDOR AND WALLCOVERING WAINSCOT W/ J-MOLD ON THE OTHER SIDE. SEE ELEVATION ON SHEET A11.02.

6. TYPICAL UNIT FINISHES:
FLOORING FINISH- WOODFLOORING (WD-1) IN FOYER & KITCHEN; CARPET (C9) IN DINING, LIVING ROOM & BEDROOM; PORCELAIN TILE (PT-2) IN BATHROOM
WALL FINISH- PAINT (P-2) THROUGHOUT
WINDOW COVERING- WT-2 AT EXTERIOR WINDOW

8. REFER TO SHEET A7.09 FOR ENLARGED RESTROOM FINISH PLAN.

FINISH LEGEND

FLOORING & BASE FINISH		WALL FINISH	
C-1	CARPET 1	P-1	PAINT 1
C-2	CARPET 2	P-2	PAINT 2
		P-3	PAINT 3
C-3	(NOT USED)	P-4	PAINT 4
C-4	(NOT USED)	P-5	PAINT 5
C-5	(NOT USED)	P-6	PAINT 6
C-6	CARPET 6	P-7	PAINT 7
C-7	CARPET 7	P-8	PAINT 8
		P-9	PAINT 9
C-8	(NOT USED)	P-10	PAINT 10
		WC-1	WALLCOVERING 1
C-9	CARPET 9	WC-2	WALLCOVERING 2
CONC.	SEALED CONCRETE	WC-3	WALLCOVERING 3
EPX-1	EPOXY RESIN FLOORING 1	WC-4	WALLCOVERING 4
		WC-5	WALLCOVERING 5
PT-1	PORCELAIN TILE 1 (12"X12")	WC-6	WALLCOVERING 6
PT-2	PORCELAIN TILE 2 (FLOOR & WALL)	WT-1	WINDOW TREATMENT 1
		WT-2	WINDOW TREATMENT 2
PT-3	PORCELAIN TILE 3 (MOSAIC) (FLOOR & WALL)	WT-3	WINDOW TREATMENT 3
		WT-4	WINDOW TREATMENT 4
PTB-1	PORCELAIN TILE BASE 1		
PTB-2	PORCELAIN TILE BASE 2	MILLWORK FINISH/MISC.	
QT-1	QUARRY TILE		
QTB-1	QUARRY TILE BASE	GL-1	GLASS 1
B-1	RESILIENT BASE 1	GL-2	GLASS 2
B-2	RESILIENT BASE 2	GL-3	GLASS 3
RF-1	RESILIENT FLOORING 1	PL-1	PLASTIC LAMINATE 1
RF-2	RESILIENT FLOORING 2	PL-2	PLASTIC LAMINATE 2
RF-3	RESILIENT FLOORING 3	PL-3	PLASTIC LAMINATE 3
RF-4	RESILIENT FLOORING 3	QSF-1	QUARTZ SURFACE
		SSF-1	SOLID SURFACE 1
RF-5	RESILIENT FLOORING 3	ST-1	STONE 1
		ST-2	STONE 2
WD-1	WOOD FLOOR 1	HR-1	HANDRAIL 1
		WP-1	WALL PANEL 1
SYMBOL		WP-2	WALL PANEL 2
X/#	WALL FINISH	WP-3	WALL PANEL 3
X/#	FLOOR FINISH	WP-4	WALL PANEL 4
X/#	BASE FINISH	WPR1	WALL PROTECTION
X/#	MILLWORK	WD-2	WOOD 2 (CABINETRY)

FINISH A / FINISH B — FLOOR FINISH TRANSITION
NOTE: 1.- FOR ALL DIMENSIONS TO REVEALS, SEE WALL SECTIONS ON 9/A5.01
2.- FOR WINDOW TYPE DEFINITIONS, SEE PLANS.
ELEVATION

WWC OT
Widom Wein Cohen O'Leary Terasawa

3130 Wilshire Boulevard
Sixth Floor
Santa Monica, California 90403
T (310) 828-0040
F (310) 453-0432
www.wwcot.com

Inland Empire
Palm Springs
Moorpark
Shanghai, China

RECEIVED
10:08 am, Aug 14, 2008
FRAMEMAX

Building Department Submittal: June 1, 2007
Issued For Bid: _____
Issued For Construction: _____

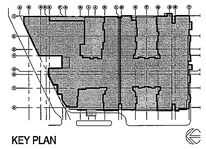

KEY PLAN

Project:
Jewish Home for The Aging

FOUNTAINVIEW AT EISENBERG VILLAGE

6440 Wilbur Ave
Reseda, CA. 91335

JEWISH HOME

JEWISH HOME FOR THE AGING
18855 Victory Blvd.
Reseda, CA 91335

Project Number: 04206.00

Overall Third Floor Finish Plan

Date: 04/05/2007
Drawn By: _____
Checked By: _____

A12.03
Sheet No.

THIRD FLOOR FINISH PLAN — Scale 1/16" = 1'-0" — 5

Key Notes — Scale N.T.S. — 1

File Path & Name: F:\PROJECTS\04206-00\A-CD\SHEETS\A12.03.DWG
© WWCOT 2006 May 28, 2007 - 04:02 pm

RECEIVED BY SUFFOLK ON 06/01/07

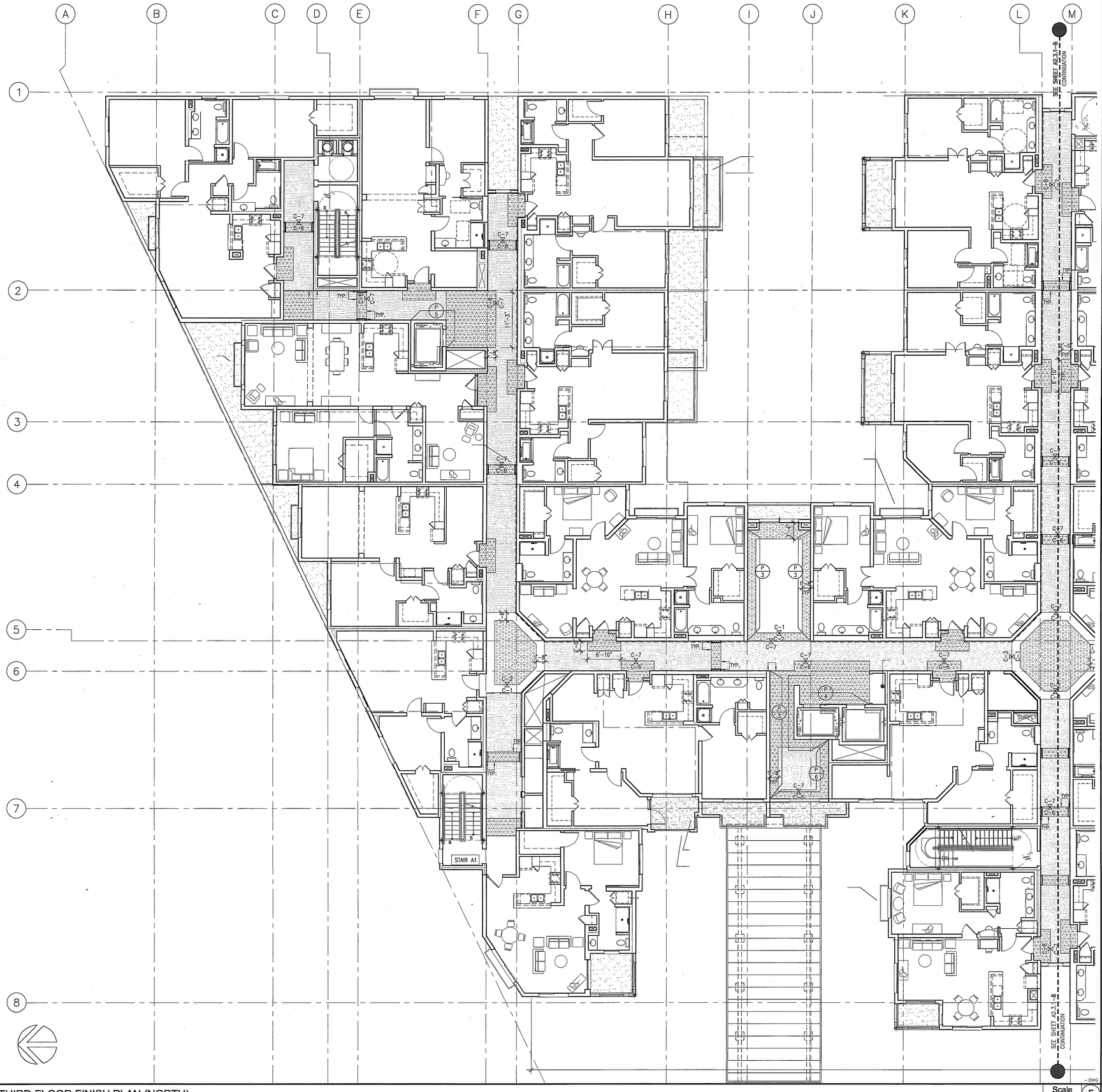

THIRD FLOOR FINISH PLAN (NORTH)

Scale 1/8" = 1'-0" 5

KEYNOTES

1. FLOOR FINISH TO ALIGN W/CEILING ABOVE. G.C. TO USE FULL TILE CARPET WHERE POSSIBLE.
2. LOCATION OF HANDRAIL (HR-1) IN CORRIDORS.

GENERAL NOTES:

1. REFER TO SPECIFICATION BOOK, SECTION 09000: COLORS & MATERIALS FOR ALL SCHEDULED INTERIOR FINISHES.

2. ALL GYP. BD. PARTITIONS & GYP. BD. CEILINGS TO RECEIVE PAINT THROUGHOUT, U.O.N. P-1 TO BE TYPICAL PAINT THROUGHOUT & GYP. BD. CEILING IN COMMON CORRIDORS, U.O.N.
UNITS & COMMON CORRIDOR ABOVE WAINSCOT WALLCOVERING TO BE P-2.

3. ALL BASE IN COMMON AREAS & UNITS TO BE B-1, U.O.N. ALL BASE IN EMPLOYEE AREAS OR BACK OF THE HOUSE TO BE B-2, U.O.N.
CONTRACTOR TO USE WALL BASE FROM COIL/ROLL. CONTRACTOR TO SCORE BACKSIDE FOR CRISP CORNERS.

4. ALL BROADLOOM CARPET TO BE INSTALLED DIRECT GLUED-DOWN. ALL CARPET TILES TO BE INSTALLED QUARTER-TURN.

5. TYP. CORRIDOR TO HAVE WALLCOVERING (WC1) UPTO 31" A.F.F. THROUGHOUT U.O.N.; PROVIDE & INSTALL HANDRAIL (HR1) ON ONE SIDE OF CORRIDOR AND WALLCOVERING WAINSCOT W/ J-MOLD ON THE OTHER SIDE. SEE ELEVATION ON SHEET A11.02.

6. TYPICAL UNIT FINISHES:
FLOORING FINISH- WOODFLOORING (WD-1) IN FOYER & KITCHEN; CARPET (C9) IN DINING, LIVING ROOM & BEDROOM; PORCELAIN TILE (PT-2) IN BATHROOM
WALL FINISH- PAINT (P-2) THROUGHOUT
WINDOW COVERING- WT-2 AT EXTERIOR WINDOW

8. REFER TO SHEET A7.09 FOR ENLARGED RESTROOM FINISH PLAN.

FINISH LEGEND

FLOORING & BASE FINISH		WALL FINISH	
C-1	CARPET 1	P-1	PAINT 1
C-2	CARPET 2	P-2	PAINT 2
C-3	(NOT USED)	P-3	PAINT 3
C-4	(NOT USED)	P-4	PAINT 4
C-5	(NOT USED)	P-5	PAINT 5
C-6	CARPET 6	P-6	PAINT 6
C-7	CARPET 7	P-7	PAINT 7
C-8	(NOT USED)	P-8	PAINT 8
C-9	CARPET 9	P-9	PAINT 9
CONC.	SEALED CONCRETE	P-10	PAINT 10
EPX-1	EPOXY RESIN FLOORING 1	WC-1	WALLCOVERING 1
PT-1	PORCELAIN TILE 1 (12"X12")	WC-2	WALLCOVERING 2
PT-2	PORCELAIN TILE 2 (FLOOR & WALL)	WC-3	WALLCOVERING 3
PT-3	PORCELAIN TILE 3 (MOSAIC) (FLOOR & WALL)	WC-4	WALLCOVERING 4
PTB-1	PORCELAIN TILE BASE 1	WC-5	WALLCOVERING 5
PTB-2	PORCELAIN TILE BASE 2	WC-6	WALLCOVERING 6
QT-1	QUARRY TILE	WT-1	WINDOW TREATMENT 1
QTB-1	QUARRY TILE BASE	WT-2	WINDOW TREATMENT 2
B-1	RESILIENT BASE 1	WT-3	WINDOW TREATMENT 3
B-2	RESILIENT BASE 2	WT-4	WINDOW TREATMENT 4
RF-1	RESILIENT FLOORING 1	MILLWORK FINISH/MISC.	
RF-2	RESILIENT FLOORING 2	GL-1	GLASS 1
RF-3	RESILIENT FLOORING 3	GL-2	GLASS 2
RF-4	RESILIENT FLOORING 3	GL-3	GLASS 3
RF-5	RESILIENT FLOORING 3	PL-1	PLASTIC LAMINATE 1
WD-1	WOOD FLOOR 1	PL-2	PLASTIC LAMINATE 2
		PL-3	PLASTIC LAMINATE 3
		QSF-1	QUARTZ SURFACE
		SSF-1	SOLID SURFACE 1
		ST-1	STONE 1
		ST-2	STONE 2
		HR-1	HANDRAIL 1
		WP-1	WALL PANEL 1
		WP-2	WALL PANEL 2
		WP-3	WALL PANEL 3
		WP-4	WALL PANEL 4
		WPR1	WALL PROTECTION
		WD-2	WOOD 2 (CABINETRY)

SYMBOL
- X/# — WALL FINISH
- X/# — FLOOR FINISH
- X/# — BASE FINISH
- X/# — MILLWORK
- FINISH A / FINISH B — FLOOR FINISH TRANSITION

NOTES
1. FOR ALL DIMENSIONS TO REVEALS, SEE WALL SECTIONS ON 9/A5.01
2. FOR WINDOW TYPE DEFINITIONS, SEE PLANS.
3. ALIGN

Key Notes

Scale N.T.S. 1

WWC OT
Widom Wein Cohen O'Leary Terasawa

3130 Wilshire Boulevard
Sixth Floor
Santa Monica, California 90403
T (310) 828-0040
F (310) 453-9432
www.wwcot.com

Inland Empire
Palm Springs
Moorpark
Shanghai, China

RECEIVED
10:08 am, Aug 14, 2008
FRAMEMAX

Building Department Submittal: June 1, 2007
Issued For Bid:
Issued For Construction:

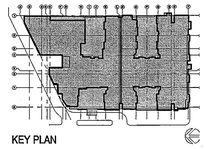

KEY PLAN

Project:
Jewish Home for The Aging
FOUNTAINVIEW AT EISENBERG VILLAGE
6440 Wilbur Ave
Reseda, CA. 91335

JEWISH HOME FOR THE AGING
18855 Victory Blvd.
Reseda, CA 91335
Project Number: 04206.00

Typical Floor Finish Plan (North)

Date: 04/05/2007
Drawn By:
Checked By:

A12.03-A
Sheet No.

File Path & Name: F:\PROJECTS\04206-00\A-CD\SHEETS\A12.03-A.DWG
© WWCOT 2006 May 28, 2007 - 04:02 pm

RECEIVED BY SUFFOLK ON 06/01/07

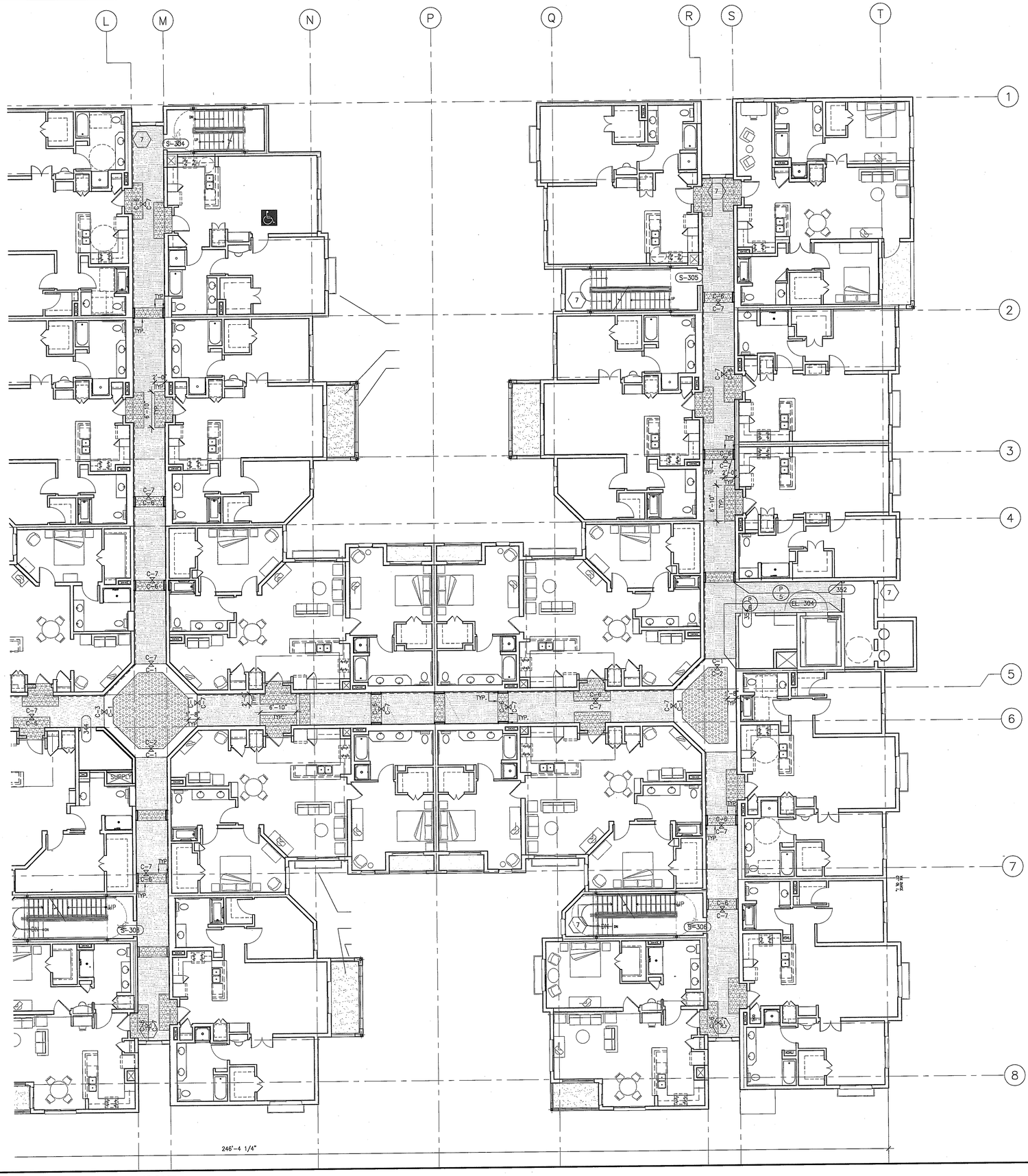

THIRD FLOOR FINISH PLAN (SOUTH)

Scale 1/8" = 1'-0" (2)

KEYNOTES

1. FLOOR FINISH TO ALIGN W/CEILING ABOVE. C.C. TO USE FULL TILE CARPET WHERE POSSIBLE.
2. LOCATION OF HANDRAIL (HR-1) IN CORRIDORS.

GENERAL NOTES:

1. REFER TO SPECIFICATION BOOK, SECTION 09000: COLORS & MATERIALS FOR ALL SCHEDULED INTERIOR FINISHES.
2. ALL GYP. BD. PARTITIONS & GYP. BD. CEILINGS TO RECEIVE PAINT THROUGHOUT, U.O.N. P-1 TO BE TYPICAL PAINT THROUGHOUT & GYP. BD. CEILING IN COMMON CORRIDORS, U.O.N.
UNITS & COMMON CORRIDOR ABOVE WAINSCOT WALLCOVERING TO BE P-2.
3. ALL BASE IN COMMON AREAS & UNITS TO BE B-1, U.O.N. ALL BASE IN EMPLOYEE AREAS OR BACK OF THE HOUSE TO BE B-2, U.O.N.
CONTRACTOR TO USE WALL BASE FROM COIL/ROLL. CONTRACTOR TO SCORE BACKSIDE FOR CRISP CORNERS.
4. ALL BROADLOOM CARPET TO BE INSTALLED DIRECT GLUED-DOWN. ALL CARPET TILES TO BE INSTALLED QUARTER-TURN.
5. TYP. CORRIDOR TO HAVE WALLCOVERING (WC1) UPTO 31" A.F.F. THROUGHOUT U.O.N.; PROVIDE & INSTALL HANDRAIL (HR1) ON ONE SIDE OF CORRIDOR AND WALLCOVERING WAINSCOT W/ J-MOLD ON THE OTHER SIDE. SEE ELEVATION ON SHEET A11.02.
6. TYPICAL UNIT FINISHES:
FLOORING FINISH- WOODFLOORING (WD-1) IN FOYER & KITCHEN; CARPET (C9) IN DINING, LIVING ROOM & BEDROOM; PORCELAIN TILE (PT-2) IN BATHROOM
WALL FINISH- PAINT (P-2) THROUGHOUT
WINDOW COVERING- WT-2 AT EXTERIOR WINDOW
8. REFER TO SHEET A7.09 FOR ENLARGED RESTROOM FINISH PLAN.

FINISH LEGEND

FLOORING & BASE FINISH

C-1	CARPET 1	
C-2	CARPET 2	
C-3	(NOT USED)	
C-4	(NOT USED)	
C-5	(NOT USED)	
C-6	CARPET 6	
C-7	CARPET 7	
C-8	(NOT USED)	
C-9	CARPET 9	
CONC.	SEALED CONCRETE	
EPX-1	EPOXY RESIN FLOORING 1	
PT-1	PORCELAIN TILE 1 (12"X12")	
PT-2	PORCELAIN TILE 2 (FLOOR & WALL)	
PT-3	PORCELAIN TILE 3 (MOSAIC) (FLOOR & WALL)	
PTB-1	PORCELAIN TILE BASE 1	
PTB-2	PORCELAIN TILE BASE 2	
QT-1	QUARRY TILE	
QTB-1	QUARRY TILE BASE	
B-1	RESILIENT BASE 1	
B-2	RESILIENT BASE 2	
RF-1	RESILIENT FLOORING 1	
RF-2	RESILIENT FLOORING 2	
RF-3	RESILIENT FLOORING 3	
RF-4	RESILIENT FLOORING 3	
RF-5	RESILIENT FLOORING 3	
WD-1	WOOD FLOOR 1	

WALL FINISH

P-1	PAINT 1
P-2	PAINT 2
P-3	PAINT 3
P-4	PAINT 4
P-5	PAINT 5
P-6	PAINT 6
P-7	PAINT 7
P-8	PAINT 8
P-9	PAINT 9
P-10	PAINT 10
WC-1	WALLCOVERING 1
WC-2	WALLCOVERING 2
WC-3	WALLCOVERING 3
WC-4	WALLCOVERING 4
WC-5	WALLCOVERING 5
WC-6	WALLCOVERING 6
WT-1	WINDOW TREATMENT 1
WT-2	WINDOW TREATMENT 2
WT-3	WINDOW TREATMENT 3
WT-4	WINDOW TREATMENT 4

MILLWORK FINISH/MISC.

GL-1	GLASS 1
GL-2	GLASS 2
GL-3	GLASS 3
PL-1	PLASTIC LAMINATE 1
PL-2	PLASTIC LAMINATE 2
PL-3	PLASTIC LAMINATE 3
QSF-1	QUARTZ SURFACE
SSF-1	SOLID SURFACE 1
ST-1	STONE 1
ST-2	STONE 2
HR-1	HANDRAIL 1
WP-1	WALL PANEL 1
WP-2	WALL PANEL 2
WP-3	WALL PANEL 3
WP-4	WALL PANEL 4
WPR1	WALL PROTECTION
WD-2	WOOD 2 (CABINETRY)

SYMBOL

- X/# — WALL FINISH
- X/# — FLOOR FINISH
- X/# — BASE FINISH
- X/# — MILLWORK
- FINISH A / FINISH B — FLOOR FINISH TRANSITION

NOTES:
1.- FOR ALL DIMENSIONS TO REVEALS, SEE WALL SECTIONS ON 9/A5.01
2.- FOR WINDOW TYPE DEFINITIONS, SEE PLANS.

Key Notes — Scale N.T.S. (1)

WWC OT
Widom Wein Cohen O'Leary Terasawa
3130 Wilshire Boulevard
Sixth Floor
Santa Monica, California 90403
T (310) 828-0040
F (310) 453-9432
www.wwcot.com
Inland Empire
Palm Springs
Moorpark
Shanghai, China

RECEIVED
10:08 am, Aug 14, 2008
FRAMEMAX

Building Department Submittal: June 1, 2007
Issued For Bid:
Issued For Construction:

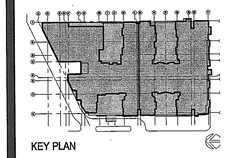

KEY PLAN

Project:
Jewish Home for The Aging
FOUNTAINVIEW AT EISENBERG VILLAGE
6440 Wilbur Ave
Reseda, CA. 91335

JEWISH HOME FOR THE AGING
18855 Victory Blvd.
Reseda, CA 91335
Project Number: 04206.00

Third Floor Finish Plan (South)

Date: 04/05/2007
Drawn By:
Checked By:

A12.03-B
Sheet No.

File Path & Name: F:\PROJECTS\04206-00\A-CD\SHEETS\A12.03-B.DWG
© WWCOT 2006 May 28, 2007 - 04:02 pm

RECEIVED BY SUFFOLK ON 06/01/07

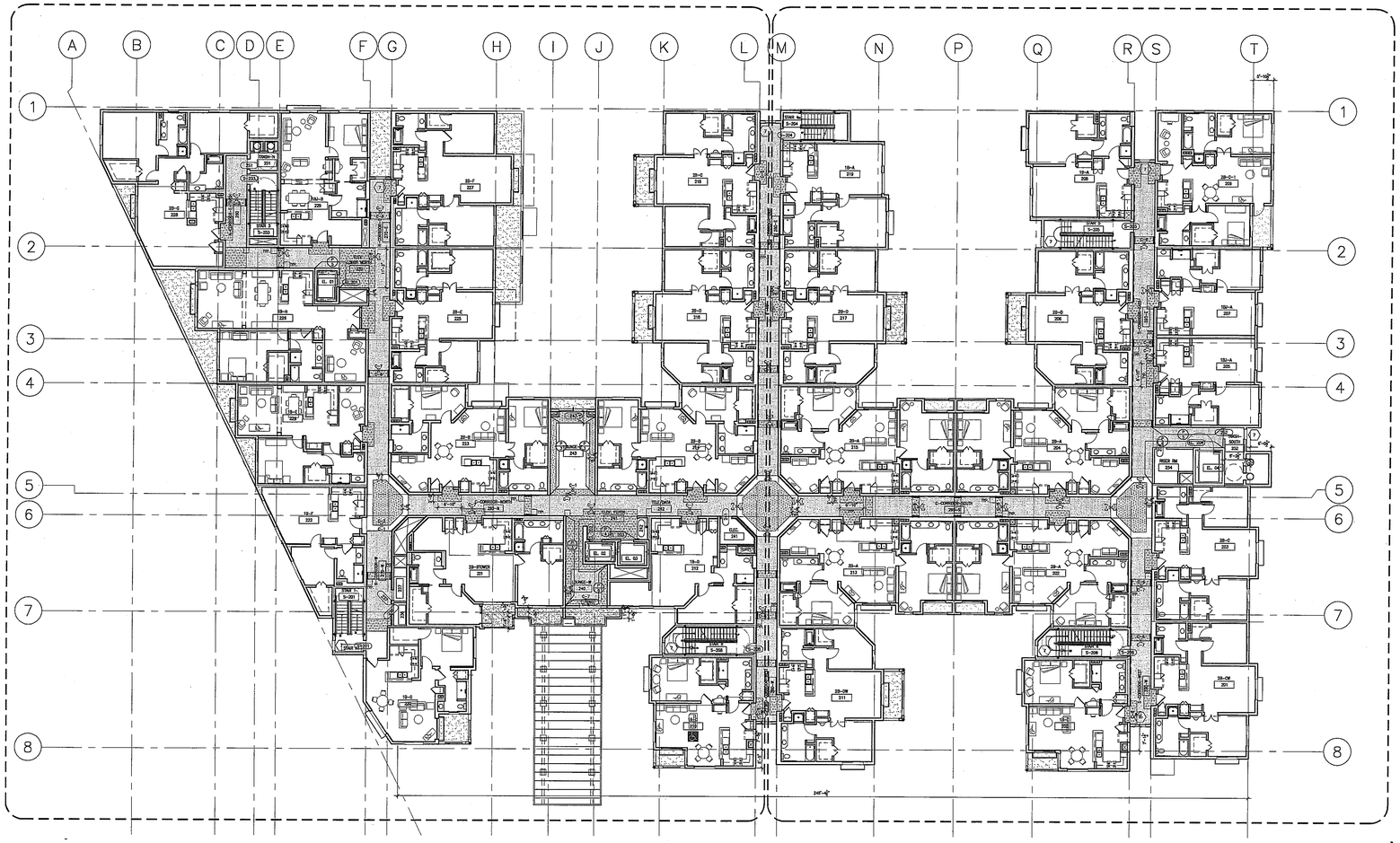

FOURTH FLOOR FINISH PLAN

Scale 1/16" = 1'-0"

5

KEYNOTES

1. FLOOR FINISH TO ALIGN W/CEILING ABOVE. G.C. TO USE FULL TILE CARPET WHERE POSSIBLE.
2. LOCATION OF HANDRAIL (HR-1) IN CORRIDORS.

GENERAL NOTES:

1. REFER TO SPECIFICATION BOOK, SECTION 09000: COLORS & MATERIALS FOR ALL SCHEDULED INTERIOR FINISHES.

2. ALL GYP. BD. PARTITIONS & GYP. BD. CEILINGS TO RECEIVE PAINT THROUGHOUT, U.O.N. P-1 TO BE TYPICAL PAINT THROUGHOUT & GYP. BD. CEILING IN COMMON CORRIDORS, U.O.N.
UNITS & COMMON CORRIDOR ABOVE WAINSCOT WALLCOVERING TO BE P-2.

3. ALL BASE IN COMMON AREAS & UNITS TO BE B-1, U.O.N. ALL BASE IN EMPLOYEE AREAS OR BACK OF THE HOUSE TO BE B-2, U.O.N.
CONTRACTOR TO USE WALL BASE FROM COIL/ROLL. CONTRACTOR TO SCORE BACKSIDE FOR CRISP CORNERS.

4. ALL BROADLOOM CARPET TO BE INSTALLED DIRECT GLUED-DOWN. ALL CARPET TILES TO BE INSTALLED QUARTER-TURN.

5. TYP. CORRIDOR TO HAVE WALLCOVERING (WC1) UPTO 31" A.F.F. THROUGHOUT U.O.N.; PROVIDE & INSTALL HANDRAIL (HR1) ON ONE SIDE OF CORRIDOR AND WALLCOVERING WAINSCOT W/ J-MOLD ON THE OTHER SIDE. SEE ELEVATION ON SHEET A11.02.

6. TYPICAL UNIT FINISHES:
FLOORING FINISH- WOODFLOORING (WD-1) IN FOYER & KITCHEN; CARPET (C9) IN DINING, LIVING ROOM & BEDROOM; PORCELAIN TILE (PT-2) IN BATHROOM
WALL FINISH- PAINT (P-2) THROUGHOUT
WINDOW COVERING- WT-2 AT EXTERIOR WINDOW

8. REFER TO SHEET A7.09 FOR ENLARGED RESTROOM FINISH PLAN.

FINISH LEGEND

FLOORING & BASE FINISH

C-1	CARPET 1	
C-2	CARPET 2	
C-3	(NOT USED)	
C-4	(NOT USED)	
C-5	(NOT USED)	
C-6	CARPET 6	
C-7	CARPET 7	
C-8	(NOT USED)	
C-9	CARPET 9	
CONC.	SEALED CONCRETE	
EPX-1	EPOXY RESIN FLOORING 1	
PT-1	PORCELAIN TILE 1 (12"X12")	
PT-2	PORCELAIN TILE 2 (FLOOR & WALL)	
PT-3	PORCELAIN TILE 3 (MOSAIC) (FLOOR & WALL)	
PTB-1	PORCELAIN TILE BASE 1	
PTB-2	PORCELAIN TILE BASE 2	
QT-1	QUARRY TILE	
QTB-1	QUARRY TILE BASE	
B-1	RESILIENT BASE 1	
B-2	RESILIENT BASE 2	
RF-1	RESILIENT FLOORING 1	
RF-2	RESILIENT FLOORING 2	
RF-3	RESILIENT FLOORING 3	
RF-4	RESILIENT FLOORING 3	
RF-5	RESILIENT FLOORING 3	
WD-1	WOOD FLOOR 1	

WALL FINISH

P-1	PAINT 1
P-2	PAINT 2
P-3	PAINT 3
P-4	PAINT 4
P-5	PAINT 5
P-6	PAINT 6
P-7	PAINT 7
P-8	PAINT 8
P-9	PAINT 9
P-10	PAINT 10
WC-1	WALLCOVERING 1
WC-2	WALLCOVERING 2
WC-3	WALLCOVERING 3
WC-4	WALLCOVERING 4
WC-5	WALLCOVERING 5
WC-6	WALLCOVERING 6
WT-1	WINDOW TREATMENT 1
WT-2	WINDOW TREATMENT 2
WT-3	WINDOW TREATMENT 3
WT-4	WINDOW TREATMENT 4

MILLWORK FINISH/MISC.

GL-1	GLASS 1
GL-2	GLASS 2
GL-3	GLASS 3
PL-1	PLASTIC LAMINATE 1
PL-2	PLASTIC LAMINATE 2
PL-3	PLASTIC LAMINATE 3
QSF-1	QUARTZ SURFACE
SSF-1	SOLID SURFACE 1
ST-1	STONE 1
ST-2	STONE 2
HR-1	HANDRAIL 1
WP-1	WALL PANEL 1
WP-2	WALL PANEL 2
WP-3	WALL PANEL 3
WP-4	WALL PANEL 4
WPR1	WALL PROTECTION
WD-2	WOOD 2 (CABINETRY)

SYMBOL

- X/# — WALL FINISH
- X/# — FLOOR FINISH
- X/# — BASE FINISH
- X/# — MILLWORK
- FINISH A / FINISH B — FLOOR FINISH TRANSITION

NOTES:
1. FOR ALL DIMENSIONS TO REVEALS, SEE WALL SECTIONS ON 9/A5.01
2. FOR WINDOW TYPE DEFINITIONS, SEE PLANS.

Key Notes

Scale N.T.S.

1

WWCOT
Widom Wein Cohen O'Leary Terasawa

3130 Wilshire Boulevard
Sixth Floor
Santa Monica, California 90403
T (310) 828-0040
F (310) 453-9432
www.wwcot.com

Inland Empire
Palm Springs
Moorpark
Shanghai, China

RECEIVED
10:08 am, Aug 14, 2008
FRAMEMAX

Building Department Submittal: June 1, 2007
Issued For Bid:
Issued For Construction:

KEY PLAN

Project:
Jewish Home for The Aging
FOUNTAINVIEW AT EISENBERG VILLAGE
6440 Wilbur Ave
Reseda, CA. 91335

JEWISH HOME
JEWISH HOME FOR THE AGING
18855 Victory Blvd.
Reseda, CA 91335

Project Number: 04206.00

Overall Fourth Floor Finish Plan

Date: 04/05/2007
Drawn By:
Checked By:

A12.04
Sheet No.

File Path & Name: F:\PROJECTS\04206-00\A-CD\SHEETS\A12.04.DWG
© WWCOT 2006 May 28, 2007 - 04:03 pm

RECEIVED BY SUFFOLK ON 06/01/07

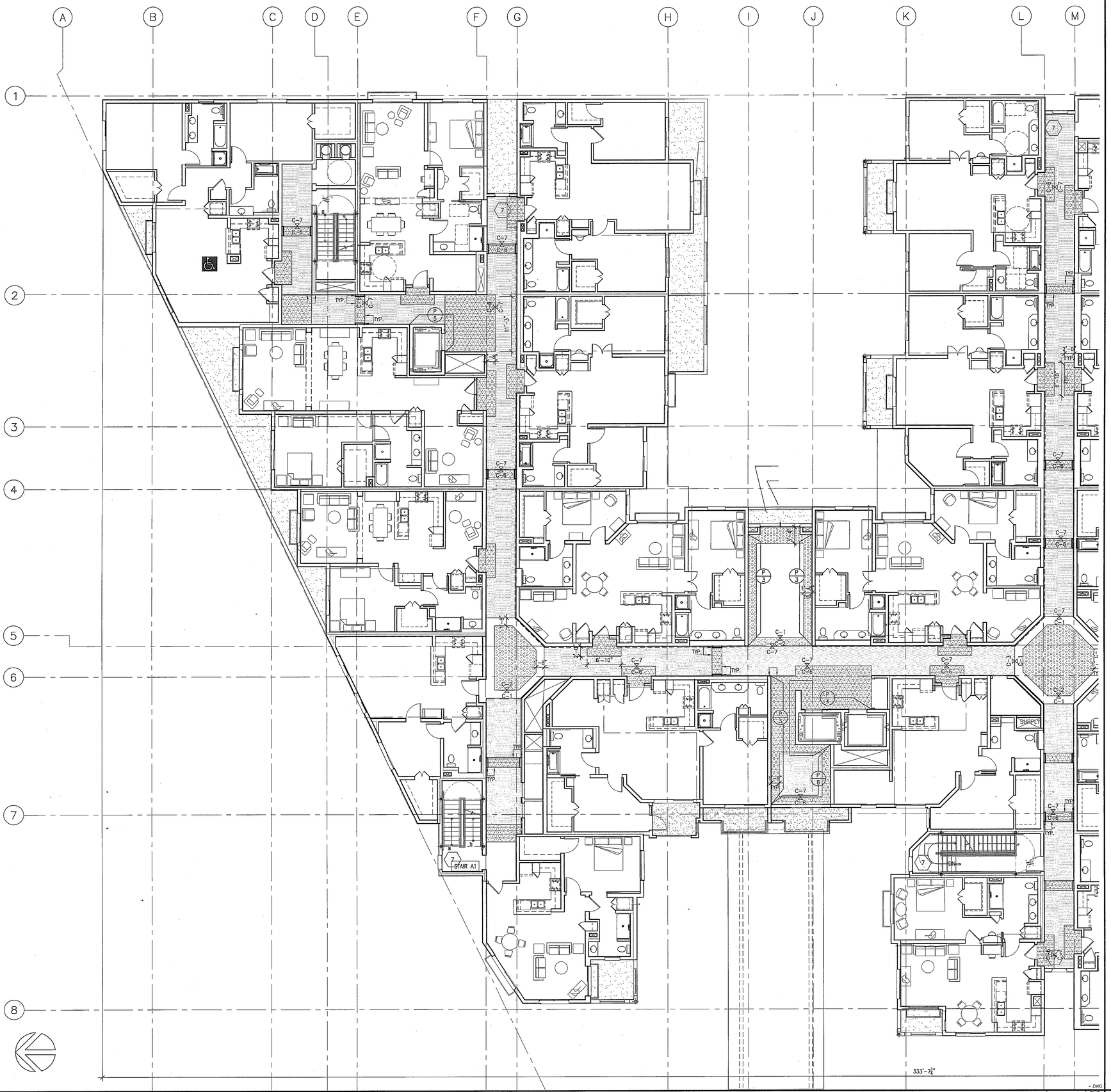

FOURTH FLOOR FINISH PLAN (NORTH)

Scale 1/8" = 1'-0" 5

KEYNOTES

1. FLOOR FINISH TO ALIGN W/CEILING ABOVE. G.C. TO USE FULL TILE CARPET WHERE POSSIBLE.
2. LOCATION OF HANDRAIL (HR-1) IN CORRIDORS.

GENERAL NOTES:

1. REFER TO SPECIFICATION BOOK, SECTION 09000: COLORS & MATERIALS FOR ALL SCHEDULED INTERIOR FINISHES.
2. ALL GYP. BD. PARTITIONS & GYP. BD. CEILINGS TO RECEIVE PAINT THROUGHOUT, U.O.N. P-1 TO BE TYPICAL PAINT THROUGHOUT & GYP. BD. CEILING IN COMMON CORRIDORS, U.O.N.
UNITS & COMMON CORRIDOR ABOVE WAINSCOT WALLCOVERING TO BE P-2.
3. ALL BASE IN COMMON AREAS & UNITS TO BE B-1, U.O.N. ALL BASE IN EMPLOYEE AREAS OR BACK OF THE HOUSE TO BE B-2, U.O.N.
CONTRACTOR TO USE WALL BASE FROM COIL/ROLL. CONTRACTOR TO SCORE BACKSIDE FOR CRISP CORNERS.
4. ALL BROADLOOM CARPET TO BE INSTALLED DIRECT GLUED-DOWN. ALL CARPET TILES TO BE INSTALLED QUARTER-TURN.
5. TYP. CORRIDOR TO HAVE WALLCOVERING (WC1) UPTO 31" A.F.F. THROUGHOUT U.O.N.; PROVIDE & INSTALL HANDRAIL (HR1) ON ONE SIDE OF CORRIDOR AND WALLCOVERING WAINSCOT W/ J-MOLD ON THE OTHER SIDE. SEE ELEVATION ON SHEET A11.02.
6. TYPICAL UNIT FINISHES:
FLOORING FINISH- WOODFLOORING (WD-1) IN FOYER & KITCHEN; CARPET (C9) IN DINING, LIVING ROOM & BEDROOM; PORCELAIN TILE (PT-2) IN BATHROOM
WALL FINISH- PAINT (P-2) THROUGHOUT
WINDOW COVERING- WT-2 AT EXTERIOR WINDOW
8. REFER TO SHEET A7.09 FOR ENLARGED RESTROOM FINISH PLAN.

FINISH LEGEND

FLOORING & BASE FINISH		WALL FINISH	
C-1	CARPET 1	P-1	PAINT 1
C-2	CARPET 2	P-2	PAINT 2
C-3	(NOT USED)	P-3	PAINT 3
C-4	(NOT USED)	P-4	PAINT 4
C-5	(NOT USED)	P-5	PAINT 5
C-6	CARPET 6	P-6	PAINT 6
C-7	CARPET 7	P-7	PAINT 7
C-8	(NOT USED)	P-8	PAINT 8
C-9	CARPET 9	P-9	PAINT 9
CONC.	SEALED CONCRETE	P-10	PAINT 10
EPX-1	EPOXY RESIN FLOORING 1	WC-1	WALLCOVERING 1
PT-1	PORCELAIN TILE 1 (12"X12")	WC-2	WALLCOVERING 2
PT-2	PORCELAIN TILE 2 (FLOOR & WALL)	WC-3	WALLCOVERING 3
PT-3	PORCELAIN TILE 3 (MOSAIC) (FLOOR & WALL)	WC-4	WALLCOVERING 4
PTB-1	PORCELAIN TILE BASE 1	WC-5	WALLCOVERING 5
PTB-2	PORCELAIN TILE BASE 2	WC-6	WALLCOVERING 6
QT-1	QUARRY TILE	WT-1	WINDOW TREATMENT 1
QTB-1	QUARRY TILE BASE	WT-2	WINDOW TREATMENT 2
B-1	RESILIENT BASE 1	WT-3	WINDOW TREATMENT 3
B-2	RESILIENT BASE 2	WT-4	WINDOW TREATMENT 4
RF-1	RESILIENT FLOORING 1	MILLWORK FINISH/MISC.	
RF-2	RESILIENT FLOORING 2	GL-1	GLASS 1
RF-3	RESILIENT FLOORING 3	GL-2	GLASS 2
RF-4	RESILIENT FLOORING 3	GL-3	GLASS 3
RF-5	RESILIENT FLOORING 3	PL-1	PLASTIC LAMINATE 1
WD-1	WOOD FLOOR 1	PL-2	PLASTIC LAMINATE 2
		PL-3	PLASTIC LAMINATE 3
		QSF-1	QUARTZ SURFACE
		SSF-1	SOLID SURFACE 1
		ST-1	STONE 1
		ST-2	STONE 2
		HR-1	HANDRAIL 1
		WP-1	WALL PANEL 1
		WP-2	WALL PANEL 2
		WP-3	WALL PANEL 3
		WP-4	WALL PANEL 4
		WPR1	WALL PROTECTION
		WD-2	WOOD 2 (CABINETRY)

SYMBOL
X/# — WALL FINISH
X/# — FLOOR FINISH
X/# — BASE FINISH
X/# — MILLWORK

FINISH A / FINISH B — FLOOR FINISH TRANSITION
NOTE: 1.- FOR ALL DIMENSIONS TO REVEALS, SEE WALL SECTIONS ON 9/A5.01
2.- FOR WINDOW TYPE DEFINITIONS, SEE PLANS.

Key Notes

Scale N.T.S. 1

WWC OT
Widom Wein Cohen O'Leary Terasawa
3130 Wilshire Boulevard
Sixth Floor
Santa Monica, California 90403
T (310) 828-0040
F (310) 453-9432
www.wwcot.com
Inland Empire
Palm Springs
Moorpark
Shanghai, China

RECEIVED
10:08 am, Aug 14, 2006
FRAMEMAX

Building Department Submittal: June 1, 2007
Issued For Bid: _____
Issued For Construction: _____

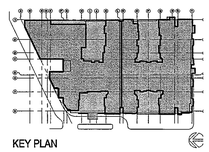

KEY PLAN

Project:
Jewish Home for The Aging
FOUNTAINVIEW AT EISENBERG VILLAGE
6440 Wilbur Ave
Reseda, CA. 91335

JEWISH HOME FOR THE AGING
18855 Victory Blvd.
Reseda, CA 91335
Project Number: 04206.00

Fourth Floor Finish Plan (North)

Date: 04/05/2007
Drawn By: _____
Checked By: _____

A12.04-A
Sheet No.

File Path & Name: F:\PROJECTS\04206-00\A-CD\SHEETS\A12.04-A.DWG
May 28, 2007 - 04:03 pm
© WWCOT 2006

RECEIVED BY SUFFOLK ON 06/01/07

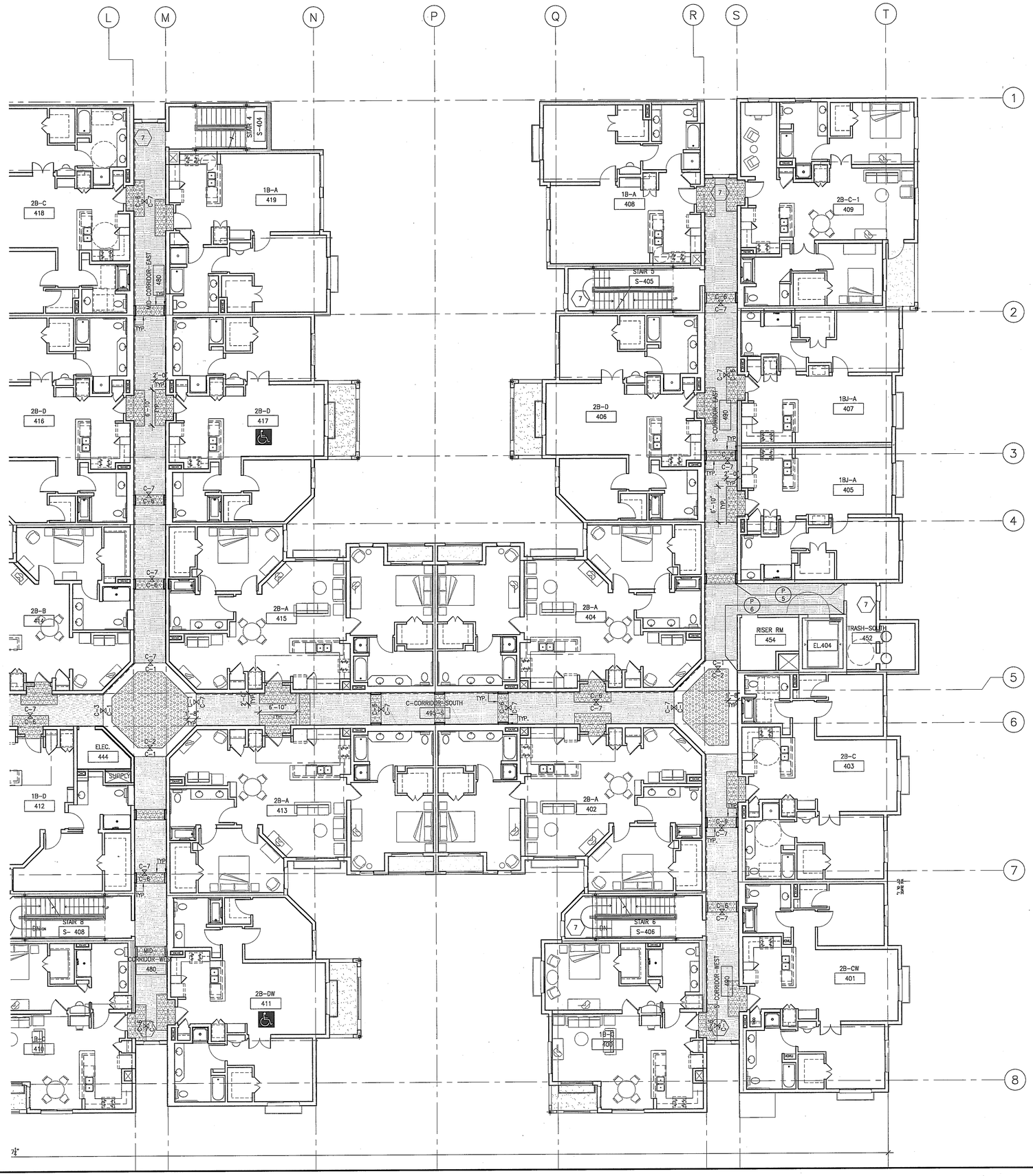

FOURTH FLOOR FINISH PLAN (SOUTH)

Scale 1/8" = 1'-0" (2)

KEYNOTES

1. FLOOR FINISH TO ALIGN W/CEILING ABOVE. G.C. TO USE FULL TILE CARPET WHERE POSSIBLE.
2. LOCATION OF HANDRAIL (HR-1) IN CORRIDORS.

GENERAL NOTES:

1. REFER TO SPECIFICATION BOOK, SECTION 09000: COLORS & MATERIALS FOR ALL SCHEDULED INTERIOR FINISHES.
2. ALL GYP. BD. PARTITIONS & GYP. BD. CEILINGS TO RECEIVE PAINT THROUGHOUT, U.O.N. P-1 TO BE TYPICAL PAINT THROUGHOUT & GYP. BD. CEILING IN COMMON CORRIDORS, U.O.N.
UNITS & COMMON CORRIDOR ABOVE WAINSCOT WALLCOVERING TO BE P-2.
3. ALL BASE IN COMMON AREAS & UNITS TO BE B-1, U.O.N. ALL BASE IN EMPLOYEE AREAS OR BACK OF THE HOUSE TO BE B-2, U.O.N.
CONTRACTOR TO USE WALL BASE FROM COIL/ROLL. CONTRACTOR TO SCORE BACKSIDE FOR CRISP CORNERS.
4. ALL BROADLOOM CARPET TO BE INSTALLED DIRECT GLUED-DOWN. ALL CARPET TILES TO BE INSTALLED QUARTER-TURN.
5. TYP. CORRIDOR TO HAVE WALLCOVERING (WC1) UPTO 31" A.F.F. THROUGHOUT U.O.N.; PROVIDE & INSTALL HANDRAIL (HR1) ON ONE SIDE OF CORRIDOR AND WALLCOVERING WAINSCOT W/ J-MOLD ON THE OTHER SIDE. SEE ELEVATION ON SHEET A11.02.
6. TYPICAL UNIT FINISHES:
FLOORING FINISH- WOODFLOORING (WD-1) IN FOYER & KITCHEN; CARPET (C9) IN DINING, LIVING ROOM & BEDROOM; PORCELAIN TILE (PT-2) IN BATHROOM
WALL FINISH- PAINT (P-2) THROUGHOUT
WINDOW COVERING- WT-2 AT EXTERIOR WINDOW
8. REFER TO SHEET A7.09 FOR ENLARGED RESTROOM FINISH PLAN.

FINISH LEGEND

FLOORING & BASE FINISH

C-1	CARPET 1	
C-2	CARPET 2	
C-3	(NOT USED)	
C-4	(NOT USED)	
C-5	(NOT USED)	
C-6	CARPET 6	
C-7	CARPET 7	
C-8	(NOT USED)	
C-9	CARPET 9	
CONC.	SEALED CONCRETE	
EPX-1	EPOXY RESIN FLOORING 1	
PT-1	PORCELAIN TILE 1 (12"X12")	
PT-2	PORCELAIN TILE 2 (FLOOR & WALL)	
PT-3	PORCELAIN TILE 3 (MOSAIC) (FLOOR & WALL)	
PTB-1	PORCELAIN TILE BASE 1	
PTB-2	PORCELAIN TILE BASE 2	
QT-1	QUARRY TILE	
QTB-1	QUARRY TILE BASE	
B-1	RESILIENT BASE 1	
B-2	RESILIENT BASE 2	
RF-1	RESILIENT FLOORING 1	
RF-2	RESILIENT FLOORING 2	
RF-3	RESILIENT FLOORING 3	
RF-4	RESILIENT FLOORING 3	
RF-5	RESILIENT FLOORING 3	
WD-1	WOOD FLOOR 1	

WALL FINISH

P-1	PAINT 1
P-2	PAINT 2
P-3	PAINT 3
P-4	PAINT 4
P-5	PAINT 5
P-6	PAINT 6
P-7	PAINT 7
P-8	PAINT 8
P-9	PAINT 9
P-10	PAINT 10
WC-1	WALLCOVERING 1
WC-2	WALLCOVERING 2
WC-3	WALLCOVERING 3
WC-4	WALLCOVERING 4
WC-5	WALLCOVERING 5
WC-6	WALLCOVERING 6
WT-1	WINDOW TREATMENT 1
WT-2	WINDOW TREATMENT 2
WT-3	WINDOW TREATMENT 3
WT-4	WINDOW TREATMENT 4

MILLWORK FINISH/MISC.

GL-1	GLASS 1
GL-2	GLASS 2
GL-3	GLASS 3
PL-1	PLASTIC LAMINATE 1
PL-2	PLASTIC LAMINATE 2
PL-3	PLASTIC LAMINATE 3
QSF-1	QUARTZ SURFACE
SSF-1	SOLID SURFACE 1
ST-1	STONE 1
ST-2	STONE 2
HR-1	HANDRAIL 1
WP-1	WALL PANEL 1
WP-2	WALL PANEL 2
WP-3	WALL PANEL 3
WP-4	WALL PANEL 4
WPR1	WALL PROTECTION
WD-2	WOOD 2 (CABINETRY)

SYMBOL

- X/# — WALL FINISH
- X/# — FLOOR FINISH
- X/# — BASE FINISH
- X/# — MILLWORK
- FINISH A TO FINISH B — FLOOR FINISH TRANSITION

NOTE: 1.- FOR ALL DIMENSIONS TO REVEALS, SEE WALL SECTIONS ON 9/A5.01
2.- ALIGN FOR WINDOW TYPE DEFINITIONS, SEE PLANS.

Key Notes — Scale N.T.S. (1)

WWC OT
Widom Wein Cohen O'Leary Terasawa

3130 Wilshire Boulevard
Sixth Floor
Santa Monica, California 90403
T (310) 828-0040
F (310) 453-9432
www.wwcot.com

Inland Empire
Palm Springs
Moorpark
Shanghai, China

RECEIVED
10:08 am, Aug 14, 2008
FRAMEMAX

Building Department Submittal: June 1, 2007
Issued For Bid: _____
Issued For Construction: _____

KEY PLAN

Project:
Jewish Home for The Aging
FOUNTAINVIEW AT EISENBERG VILLAGE
6440 Wilbur Ave
Reseda, CA. 91335

JEWISH HOME FOR THE AGING
18855 Victory Blvd.
Reseda, CA 91335
Project Number: 04206.00

Fourth Floor Finish Plan (South)

Date: 04/05/2007
Drawn By: _____
Checked By: _____

A12.04-B
Sheet No.

File Path & Name: F:\PROJECTS\04206.00\A-CD\SHEETS\A12.04-B.DWG
© WWCOT 2006 May 28, 2007 - 04:03 pm

RECEIVED BY SUFFOLK ON 06/01/07

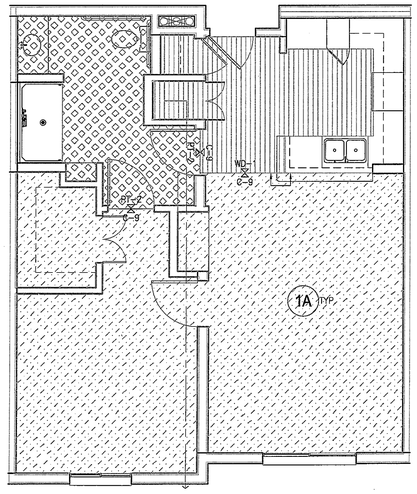

Enlarged Unit Finish Plan-1BJ-A — Scale 1/4" = 1'-0" — 13

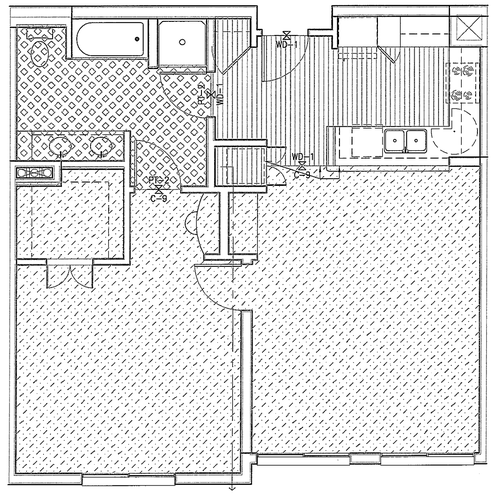

Enlarged Unit Finish Plan-1B-A — Scale 1/4" = 1'-0" — 5

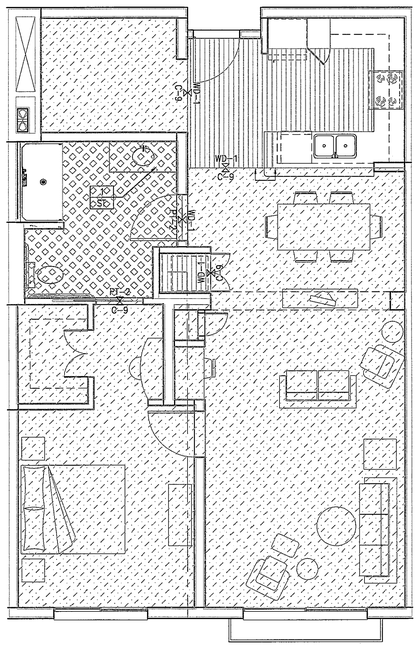

Enlarged Unit Finish Plan-1BJ-B+DEN — Scale 1/4" = 1'-0" — 13

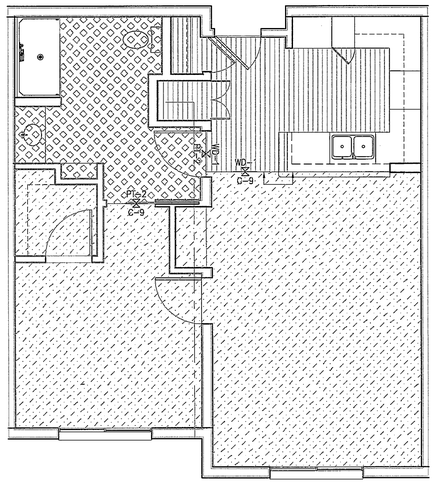

Enlarged Unit Finish Plan-1BJ-C — Scale 1/4" = 1'-0" — 5

KEYNOTES

1. FLOOR FINISH TO ALIGN W/CEILING ABOVE. G.C. TO USE FULL TILE CARPET WHERE POSSIBLE.
2. LOCATION OF HANDRAIL (HR-1) IN CORRIDORS.

GENERAL NOTES:

1. REFER TO SPECIFICATION BOOK, SECTION 09000: COLORS & MATERIALS FOR ALL SCHEDULED INTERIOR FINISHES.

2. ALL GYP. BD. PARTITIONS & GYP. BD. CEILINGS TO RECEIVE PAINT THROUGHOUT, U.O.N. P-1 TO BE TYPICAL PAINT THROUGHOUT & GYP. BD. CEILING IN COMMON CORRIDORS, U.O.N.
UNITS & COMMON CORRIDOR ABOVE WAINSCOT WALLCOVERING TO BE P-2.

3. ALL BASE IN COMMON AREAS & UNITS TO BE B-1, U.O.N. ALL BASE IN EMPLOYEE AREAS OR BACK OF THE HOUSE TO BE B-2, U.O.N.
CONTRACTOR TO USE WALL BASE FROM COIL/ROLL. CONTRACTOR TO SCORE BACKSIDE FOR CRISP CORNERS.

4. ALL BROADLOOM CARPET TO BE INSTALLED DIRECT GLUED-DOWN. ALL CARPET TILES TO BE INSTALLED QUARTER-TURN.

5. TYP. CORRIDOR TO HAVE WALLCOVERING (WC1) UPTO 31" A.F.F. THROUGHOUT U.O.N.; PROVIDE & INSTALL HANDRAIL (HR1) ON ONE SIDE OF CORRIDOR AND WALLCOVERING WAINSCOT W/ J-MOLD ON THE OTHER SIDE. SEE ELEVATION ON SHEET A11.02.

6. TYPICAL UNIT FINISHES:
FLOORING FINISH- WOODFLOORING (WD-1) IN FOYER & KITCHEN; CARPET (C9) IN DINING, LIVING ROOM & BEDROOM; PORCELAIN TILE (PT-2) IN BATHROOM
WALL FINISH- PAINT (P-2) THROUGHOUT
WINDOW COVERING- WT-2 AT EXTERIOR WINDOW

8. REFER TO SHEET A7.09 FOR ENLARGED RESTROOM FINISH PLAN.

FINISH LEGEND

FLOORING & BASE FINISH		WALL FINISH	
C-1	CARPET 1	P-1	PAINT 1
C-2	CARPET 2	P-2	PAINT 2
C-3	(NOT USED)	P-3	PAINT 3
C-4	(NOT USED)	P-4	PAINT 4
C-5	(NOT USED)	P-5	PAINT 5
C-6	CARPET 6	P-6	PAINT 6
C-7	CARPET 7	P-7	PAINT 7
C-8	(NOT USED)	P-8	PAINT 8
C-9	CARPET 9	P-9	PAINT 9
CONC.	SEALED CONCRETE	P-10	PAINT 10
EPX-1	EPOXY RESIN FLOORING 1	WC-1	WALLCOVERING 1
PT-1	PORCELAIN TILE 1 (12"X12")	WC-2	WALLCOVERING 2
PT-2	PORCELAIN TILE 2 (FLOOR & WALL)	WC-3	WALLCOVERING 3
PT-3	PORCELAIN TILE 3 (MOSAIC) (FLOOR & WALL)	WC-4	WALLCOVERING 4
PTB-1	PORCELAIN TILE BASE 1	WC-5	WALLCOVERING 5
PTB-2	PORCELAIN TILE BASE 2	WC-6	WALLCOVERING 6
QT-1	QUARRY TILE	WT-1	WINDOW TREATMENT 1
QTB-1	QUARRY TILE BASE	WT-2	WINDOW TREATMENT 2
B-1	RESILIENT BASE 1	WT-3	WINDOW TREATMENT 3
B-2	RESILIENT BASE 2	WT-4	WINDOW TREATMENT 4
RF-1	RESILIENT FLOORING 1	MILLWORK FINISH/MISC.	
RF-2	RESILIENT FLOORING 2	GL-1	GLASS 1
RF-3	RESILIENT FLOORING 3	GL-2	GLASS 2
RF-4	RESILIENT FLOORING 3	GL-3	GLASS 3
RF-5	RESILIENT FLOORING 3	PL-1	PLASTIC LAMINATE 1
WD-1	WOOD FLOOR 1	PL-2	PLASTIC LAMINATE 2
		PL-3	PLASTIC LAMINATE 3
		QSF-1	QUARTZ SURFACE
		SSF-1	SOLID SURFACE 1
		ST-1	STONE 1
		ST-2	STONE 2
		HR-1	HANDRAIL 1
		WP-1	WALL PANEL 1
		WP-2	WALL PANEL 2
		WP-3	WALL PANEL 3
		WP-4	WALL PANEL 4
		WPR1	WALL PROTECTION
		WD-2	WOOD 2 (CABINETRY)

SYMBOL

- WALL FINISH
- FLOOR FINISH
- BASE FINISH
- MILLWORK
- FINISH A / FINISH B — FLOOR FINISH TRANSITION
- ALIGN

Unit Accessory Notes and Schedules — Scale N.T.S. — 1

WWC OT
Widom Wein Cohen O'Leary Terasawa

3130 Wilshire Boulevard
Sixth Floor
Santa Monica, California 90403
T (310) 828-0040
F (310) 453-9432
www.wwcot.com

Inland Empire
Palm Springs
Moorpark
Shanghai, China

RECEIVED
10:08 am, Aug 14, 2008
FRAMEMAX

Building Department Submittal: June 1, 2007
Issued For Bid:
Issued For Construction:

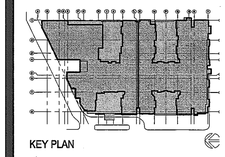

KEY PLAN

Project:
Jewish Home for The Aging
FOUNTAINVIEW AT EISENBERG VILLAGE
6440 Wilbur Ave
Reseda, CA. 91335

JEWISH HOME FOR THE AGING
18855 Victory Blvd.
Reseda, CA 91335
Project Number: 04206.00

Enlarged Unit Floor Finish Plan

Date: 04/05/2007
Drawn By:
Checked By:

A12.05
Sheet No.

File Path & Name: F:\PROJECTS\04206-00\A-CD\SHEETS\A12.05.DWG
© WWCOT 2006 May 28, 2007 - 04:03 pm

RECEIVED BY SUFFOLK ON 06/01/07

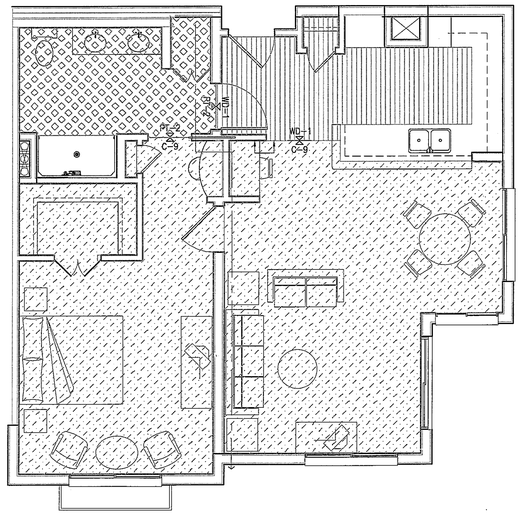

Enlarged Unit Finish Plan-1B-C — Scale 1/4" = 1'-0" — 13

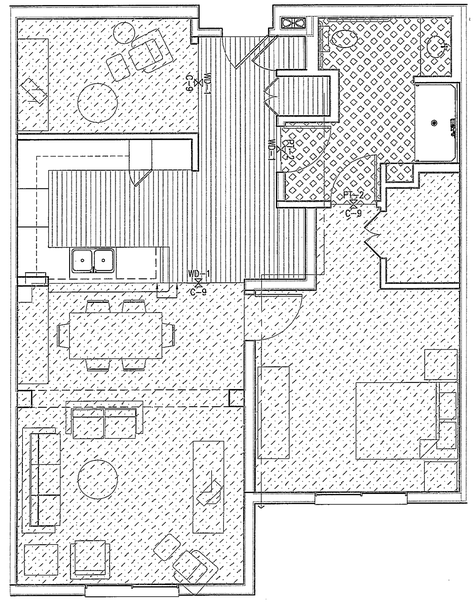

Enlarged Unit Finish Plan - 1B-E — Scale 1/4" = 1'-0" — 5

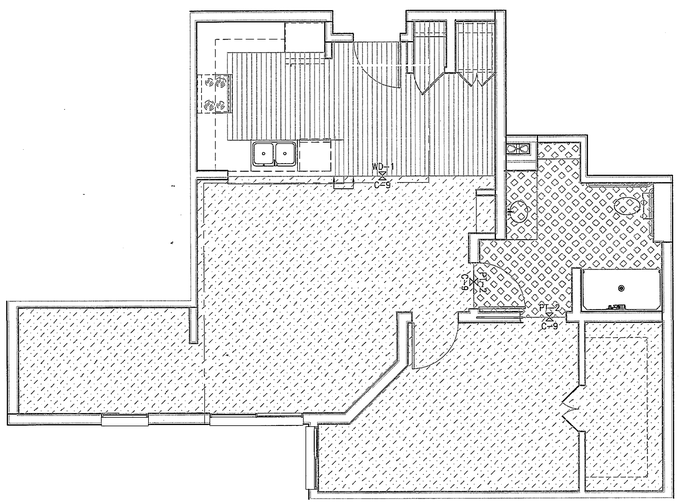

Enlarged Unit Finish Plan-1B-D — Scale 1/4" = 1'-0" — 13

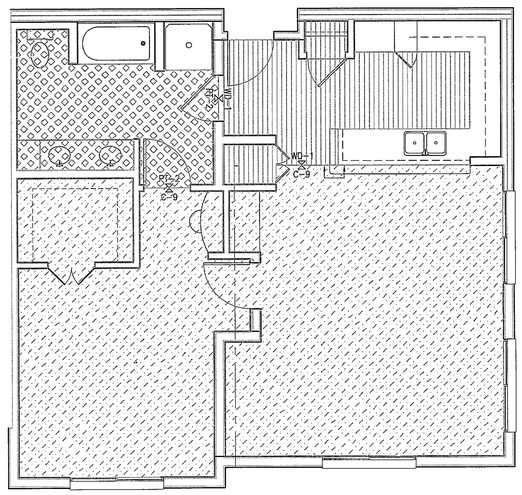

Enlarged Unit Finish Plan - 1B-B — Scale 1/4" = 1'-0" — 5

KEYNOTES

1. FLOOR FINISH TO ALIGN W/CEILING ABOVE. G.C. TO USE FULL TILE CARPET WHERE POSSIBLE.
2. LOCATION OF HANDRAIL (HR-1) IN CORRIDORS.

GENERAL NOTES:

1. REFER TO SPECIFICATION BOOK, SECTION 09000: COLORS & MATERIALS FOR ALL SCHEDULED INTERIOR FINISHES.

2. ALL GYP. BD. PARTITIONS & GYP. BD. CEILINGS TO RECEIVE PAINT THROUGHOUT, U.O.N. P-1 TO BE TYPICAL PAINT THROUGHOUT & GYP. BD. CEILING IN COMMON CORRIDORS, U.O.N.
UNITS & COMMON CORRIDOR ABOVE WAINSCOT WALLCOVERING TO BE P-2.

3. ALL BASE IN COMMON AREAS & UNITS TO BE B-1, U.O.N. ALL BASE IN EMPLOYEE AREAS OR BACK OF THE HOUSE TO BE B-2, U.O.N.
CONTRACTOR TO USE WALL BASE FROM COIL/ROLL. CONTRACTOR TO SCORE BACKSIDE FOR CRISP CORNERS.

4. ALL BROADLOOM CARPET TO BE INSTALLED DIRECT GLUED-DOWN. ALL CARPET TILES TO BE INSTALLED QUARTER-TURN.

5. TYP. CORRIDOR TO HAVE WALLCOVERING (WC1) UPTO 31" A.F.F. THROUGHOUT U.O.N.; PROVIDE & INSTALL HANDRAIL (HR1) ON ONE SIDE OF CORRIDOR AND WALLCOVERING WAINSCOT W/ J-MOLD ON THE OTHER SIDE. SEE ELEVATION ON SHEET A11.02.

6. TYPICAL UNIT FINISHES:
FLOORING FINISH- WOODFLOORING (WD-1) IN FOYER & KITCHEN; CARPET (C9) IN DINING, LIVING ROOM & BEDROOM; PORCELAIN TILE (PT-2) IN BATHROOM
WALL FINISH- PAINT (P-2) THROUGHOUT
WINDOW COVERING- WT-2 AT EXTERIOR WINDOW

8. REFER TO SHEET A7.09 FOR ENLARGED RESTROOM FINISH PLAN.

FINISH LEGEND

FLOORING & BASE FINISH

C-1	CARPET 1	
C-2	CARPET 2	
C-3	(NOT USED)	
C-4	(NOT USED)	
C-5	(NOT USED)	
C-6	CARPET 6	
C-7	CARPET 7	
C-8	(NOT USED)	
C-9	CARPET 9	
CONC.	SEALED CONCRETE	
EPX-1	EPOXY RESIN FLOORING 1	
PT-1	PORCELAIN TILE 1 (12"X12")	
PT-2	PORCELAIN TILE 2 (FLOOR & WALL)	
PT-3	PORCELAIN TILE 3 (MOSAIC) (FLOOR & WALL)	
PTB-1	PORCELAIN TILE BASE 1	
PTB-2	PORCELAIN TILE BASE 2	
QT-1	QUARRY TILE	
QTB-1	QUARRY TILE BASE	
B-1	RESILIENT BASE 1	
B-2	RESILIENT BASE 2	
RF-1	RESILIENT FLOORING 1	
RF-2	RESILIENT FLOORING 2	
RF-3	RESILIENT FLOORING 3	
RF-4	RESILIENT FLOORING 3	
RF-5	RESILIENT FLOORING 3	
WD-1	WOOD FLOOR 1	

WALL FINISH

P-1	PAINT 1
P-2	PAINT 2
P-3	PAINT 3
P-4	PAINT 4
P-5	PAINT 5
P-6	PAINT 6
P-7	PAINT 7
P-8	PAINT 8
P-9	PAINT 9
P-10	PAINT 10
WC-1	WALLCOVERING 1
WC-2	WALLCOVERING 2
WC-3	WALLCOVERING 3
WC-4	WALLCOVERING 4
WC-5	WALLCOVERING 5
WC-6	WALLCOVERING 6
WT-1	WINDOW TREATMENT 1
WT-2	WINDOW TREATMENT 2
WT-3	WINDOW TREATMENT 3
WT-4	WINDOW TREATMENT 4

MILLWORK FINISH/MISC.

GL-1	GLASS 1
GL-2	GLASS 2
GL-3	GLASS 3
PL-1	PLASTIC LAMINATE 1
PL-2	PLASTIC LAMINATE 2
PL-3	PLASTIC LAMINATE 3
QSF-1	QUARTZ SURFACE
SSF-1	SOLID SURFACE 1
ST-1	STONE 1
ST-2	STONE 2
HR-1	HANDRAIL 1
WP-1	WALL PANEL 1
WP-2	WALL PANEL 2
WP-3	WALL PANEL 3
WP-4	WALL PANEL 4
WPR1	WALL PROTECTION
WD-2	WOOD 2 (CABINETRY)

SYMBOL

- X/# — WALL FINISH
- X/# — FLOOR FINISH
- X/# — BASE FINISH
- X/# — MILLWORK
- FINISH A / FINISH B — FLOOR FINISH TRANSITION
- ALIGN

Finish Plan Legends — Scale N.T.S. — 1

WWC OT
Widom Wein Cohen O'Leary Terasawa

3130 Wilshire Boulevard
Sixth Floor
Santa Monica, California 90403
T (310) 828-0040
F (310) 453-9432
www.wwcot.com

Inland Empire
Palm Springs
Moorpark
Shanghai, China

RECEIVED
10:08 am, Aug 14, 2008
FRAMEMAX

Building Department Submittal: June 1, 2007
Issued For Bid: _____
Issued For Construction: _____



KEY PLAN

Project:
Jewish Home for The Aging
FOUNTAINVIEW AT EISENBERG VILLAGE
6440 Wilbur Ave
Reseda, CA. 91335

JEWISH HOME FOR THE AGING
18855 Victory Blvd.
Reseda, CA 91335
Project Number: 04206.00

Enlarged Unit Finish Plan

Date: 04/05/2007
Drawn By: _____
Checked By: _____

A12.06
Sheet No.

File Path & Name: F:\PROJECTS\04206-00\A-CD\SHEETS\A12.06.DWG
© WWCOT 2006 May 28, 2007 - 04:04 pm

RECEIVED BY SUFFOLK ON 06/01/07

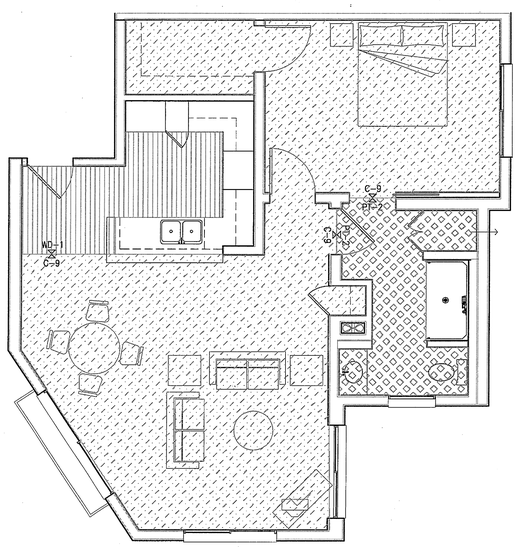

Enlarged Unit Finish Plan 1B-G — Scale 1/4" = 1'-0" — 13 — -.DWG

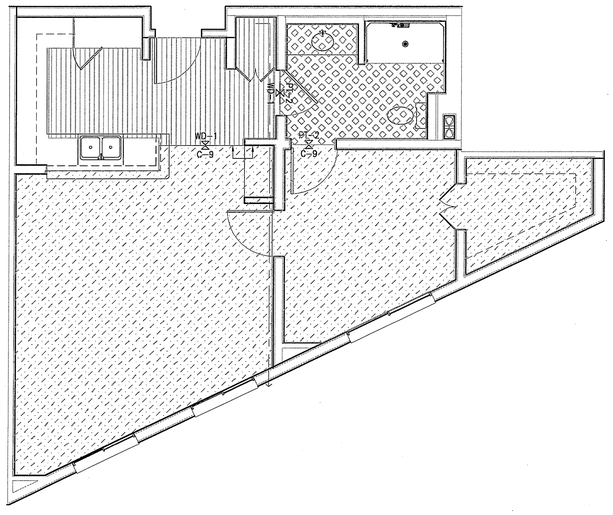

Enlarged Unit Finish Plan - 1B-F — Scale 1/4" = 1'-0" — 5 — -.DWG



Enlarged Unit Finish Plan 1B-H — Scale 1/4" = 1'-0" — 13 — -.DWG

xxx — Scale 1/4" = 1'-0" — 5 — -.DWG

KEYNOTES

1. FLOOR FINISH TO ALIGN W/CEILING ABOVE. G.C. TO USE FULL TILE CARPET WHERE POSSIBLE.
2. LOCATION OF HANDRAIL (HR-1) IN CORRIDORS.

GENERAL NOTES:

1. REFER TO SPECIFICATION BOOK, SECTION 09000: COLORS & MATERIALS FOR ALL SCHEDULED INTERIOR FINISHES.

2. ALL GYP. BD. PARTITIONS & GYP. BD. CEILINGS TO RECEIVE PAINT THROUGHOUT, U.O.N. P-1 TO BE TYPICAL PAINT THROUGHOUT & GYP. BD. CEILING IN COMMON CORRIDORS, U.O.N.
UNITS & COMMON CORRIDOR ABOVE WAINSCOT WALLCOVERING TO BE P-2.

3. ALL BASE IN COMMON AREAS & UNITS TO BE B-1, U.O.N. ALL BASE IN EMPLOYEE AREAS OR BACK OF THE HOUSE TO BE B-2, U.O.N.
CONTRACTOR TO USE WALL BASE FROM COIL/ROLL. CONTRACTOR TO SCORE BACKSIDE FOR CRISP CORNERS.

4. ALL BROADLOOM CARPET TO BE INSTALLED DIRECT GLUED-DOWN. ALL CARPET TILES TO BE INSTALLED QUARTER-TURN.

5. TYP. CORRIDOR TO HAVE WALLCOVERING (WC1) UPTO 31" A.F.F. THROUGHOUT U.O.N.; PROVIDE & INSTALL HANDRAIL (HR1) ON ONE SIDE OF CORRIDOR AND WALLCOVERING WAINSCOT W/ J-MOLD ON THE OTHER SIDE. SEE ELEVATION ON SHEET A11.02.

6. TYPICAL UNIT FINISHES:
FLOORING FINISH- WOODFLOORING (WD-1) IN FOYER & KITCHEN; CARPET (C9) IN DINING, LIVING ROOM & BEDROOM; PORCELAIN TILE (PT-2) IN BATHROOM
WALL FINISH- PAINT (P-2) THROUGHOUT
WINDOW COVERING- WT-2 AT EXTERIOR WINDOW

8. REFER TO SHEET A7.09 FOR ENLARGED RESTROOM FINISH PLAN.

FINISH LEGEND

FLOORING & BASE FINISH

C-1	CARPET 1	
C-2	CARPET 2	
C-3	(NOT USED)	
C-4	(NOT USED)	
C-5	(NOT USED)	
C-6	CARPET 6	
C-7	CARPET 7	
C-8	(NOT USED)	
C-9	CARPET 9	
CONC.	SEALED CONCRETE	
EPX-1	EPOXY RESIN FLOORING 1	
PT-1	PORCELAIN TILE 1 (12"X12")	
PT-2	PORCELAIN TILE 2 (FLOOR & WALL)	
PT-3	PORCELAIN TILE 3 (MOSAIC) (FLOOR & WALL)	
PTB-1	PORCELAIN TILE BASE 1	
PTB-2	PORCELAIN TILE BASE 2	
QT-1	QUARRY TILE	
QTB-1	QUARRY TILE BASE	
B-1	RESILIENT BASE 1	
B-2	RESILIENT BASE 2	
RF-1	RESILIENT FLOORING 1	
RF-2	RESILIENT FLOORING 2	
RF-3	RESILIENT FLOORING 3	
RF-4	RESILIENT FLOORING 3	
RF-5	RESILIENT FLOORING 3	
WD-1	WOOD FLOOR 1	

SYMBOL

- X/# — WALL FINISH
- X/# — FLOOR FINISH
- X/# — BASE FINISH
- X/# — MILLWORK
- FINISH A / FINISH B — FLOOR FINISH TRANSITION
- ALIGN

WALL FINISH

P-1	PAINT 1
P-2	PAINT 2
P-3	PAINT 3
P-4	PAINT 4
P-5	PAINT 5
P-6	PAINT 6
P-7	PAINT 7
P-8	PAINT 8
P-9	PAINT 9
P-10	PAINT 10
WC-1	WALLCOVERING 1
WC-2	WALLCOVERING 2
WC-3	WALLCOVERING 3
WC-4	WALLCOVERING 4
WC-5	WALLCOVERING 5
WC-6	WALLCOVERING 6
WT-1	WINDOW TREATMENT 1
WT-2	WINDOW TREATMENT 2
WT-3	WINDOW TREATMENT 3
WT-4	WINDOW TREATMENT 4

MILLWORK FINISH/MISC.

GL-1	GLASS 1
GL-2	GLASS 2
GL-3	GLASS 3
PL-1	PLASTIC LAMINATE 1
PL-2	PLASTIC LAMINATE 2
PL-3	PLASTIC LAMINATE 3
QSF-1	QUARTZ SURFACE
SSF-1	SOLID SURFACE 1
ST-1	STONE 1
ST-2	STONE 2
HR-1	HANDRAIL 1
WP-1	WALL PANEL 1
WP-2	WALL PANEL 2
WP-3	WALL PANEL 3
WP-4	WALL PANEL 4
WPR1	WALL PROTECTION
WD-2	WOOD 2 (CABINETRY)

Finish Plan Legends — Scale N.T.S. — 1 — -.DWG

WWC OT
Widom Wein Cohen O'Leary Terasawa

3130 Wilshire Boulevard
Sixth Floor
Santa Monica, California 90403
T (310) 829-0043
F (310) 453-9432
www.wwcot.com

Inland Empire
Palm Springs
Moorpark
Shanghai, China

RECEIVED
10:08 am, Aug 14, 2008
FRAMEMAX

Building Department Submittal: June 1, 2007
Issued For Bid:
Issued For Construction:

KEY PLAN

Project:
Jewish Home for The Aging
FOUNTAINVIEW AT EISENBERG VILLAGE
6440 Wilbur Ave
Reseda, CA. 91335

JEWISH HOME
JEWISH HOME FOR THE AGING
18855 Victory Blvd.
Reseda, CA 91335
Project Number: 04206.00

Enlarged Unit Finish Plans

Date: 04/05/2007
Drawn By:
Checked By:

A12.07
Sheet No.

File Path & Name: F:\PROJECTS\04206.00\A-CD'S\SHEETS\A12.07.DWG
© WWCOT 2006 May 28, 2007 - 04:04 pm

RECEIVED BY SUFFOLK ON 06/01/07

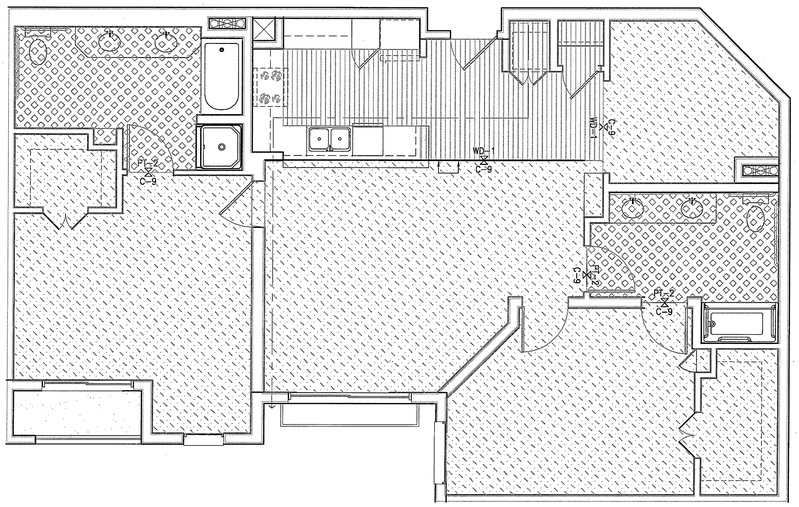

Enlarged Unit Finish Plan 2B-A

Scale 1/4" = 1'-0" | 13



Enlarged Unit Finish Plan - 2B-C-1

Scale 1/4" = 1'-0" | 13

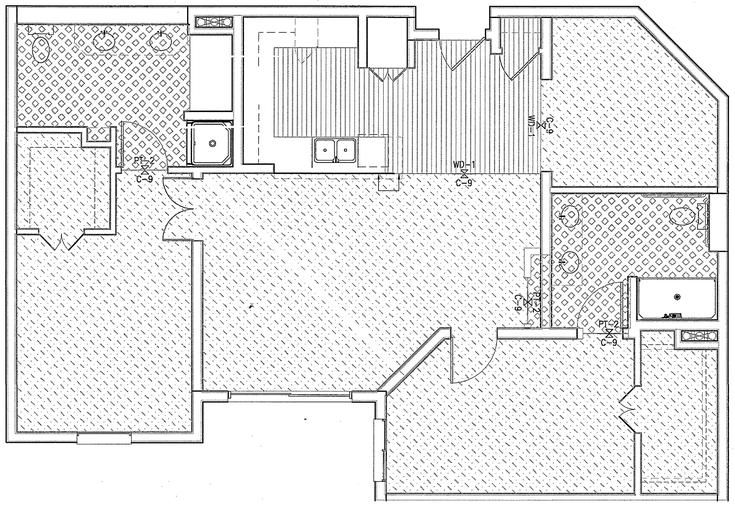

2B-B

2B-B-1

Enlarged Unit Finish Plan 2B-B & 2B-B-1

Scale 1/4" = 1'-0" | 13



Enlarged Unit Finish Plans- 2B-BTOWER

Scale 1/4" = 1'-0" | 5

KEYNOTES

1. FLOOR FINISH TO ALIGN W/CEILING ABOVE. G.C. TO USE FULL TILE CARPET WHERE POSSIBLE.
2. LOCATION OF HANDRAIL (HR-1) IN CORRIDORS.

GENERAL NOTES:

1. REFER TO SPECIFICATION BOOK, SECTION 09000: COLORS & MATERIALS FOR ALL SCHEDULED INTERIOR FINISHES.

2. ALL GYP. BD. PARTITIONS & GYP. BD. CEILINGS TO RECEIVE PAINT THROUGHOUT, U.O.N. P-1 TO BE TYPICAL PAINT THROUGHOUT & GYP. BD. CEILING IN COMMON CORRIDORS, U.O.N.
UNITS & COMMON CORRIDOR ABOVE WAINSCOT WALLCOVERING TO BE P-2.

3. ALL BASE IN COMMON AREAS & UNITS TO BE B-1, U.O.N. ALL BASE IN EMPLOYEE AREAS OR BACK OF THE HOUSE TO BE B-2, U.O.N.
CONTRACTOR TO USE WALL BASE FROM COIL/ROLL. CONTRACTOR TO SCORE BACKSIDE FOR CRISP CORNERS.

4. ALL BROADLOOM CARPET TO BE INSTALLED DIRECT GLUED-DOWN. ALL CARPET TILES TO BE INSTALLED QUARTER-TURN.

5. TYP. CORRIDOR TO HAVE WALLCOVERING (WC1) UPTO 31" A.F.F. THROUGHOUT U.O.N.; PROVIDE & INSTALL HANDRAIL (HR1) ON ONE SIDE OF CORRIDOR AND WALLCOVERING WAINSCOT W/ J-MOLD ON THE OTHER SIDE. SEE ELEVATION ON SHEET A11.02.

6. TYPICAL UNIT FINISHES:
FLOORING FINISH- WOODFLOORING (WD-1) IN FOYER & KITCHEN; CARPET (C9) IN DINING, LIVING ROOM & BEDROOM; PORCELAIN TILE (PT-2) IN BATHROOM
WALL FINISH- PAINT (P-2) THROUGHOUT
WINDOW COVERING- WT-2 AT EXTERIOR WINDOW

8. REFER TO SHEET A7.09 FOR ENLARGED RESTROOM FINISH PLAN.

FINISH LEGEND

FLOORING & BASE FINISH

C-1	CARPET 1	
C-2	CARPET 2	
C-3	(NOT USED)	
C-4	(NOT USED)	
C-5	(NOT USED)	
C-6	CARPET 6	
C-7	CARPET 7	
C-8	(NOT USED)	
C-9	CARPET 9	
CONC.	SEALED CONCRETE	
EPX-1	EPOXY RESIN FLOORING 1	
PT-1	PORCELAIN TILE 1 (12"X12")	
PT-2	PORCELAIN TILE 2 (FLOOR & WALL)	
PT-3	PORCELAIN TILE 3 (MOSAIC) (FLOOR & WALL)	
PTB-1	PORCELAIN TILE BASE 1	
PTB-2	PORCELAIN TILE BASE 2	
QT-1	QUARRY TILE	
QTB-1	QUARRY TILE BASE	
B-1	RESILIENT BASE 1	
B-2	RESILIENT BASE 2	
RF-1	RESILIENT FLOORING 1	
RF-2	RESILIENT FLOORING 2	
RF-3	RESILIENT FLOORING 3	
RF-4	RESILIENT FLOORING 3	
RF-5	RESILIENT FLOORING 3	
WD-1	WOOD FLOOR 1	

WALL FINISH

P-1	PAINT 1
P-2	PAINT 2
P-3	PAINT 3
P-4	PAINT 4
P-5	PAINT 5
P-6	PAINT 6
P-7	PAINT 7
P-8	PAINT 8
P-9	PAINT 9
P-10	PAINT 10
WC-1	WALLCOVERING 1
WC-2	WALLCOVERING 2
WC-3	WALLCOVERING 3
WC-4	WALLCOVERING 4
WC-5	WALLCOVERING 5
WC-6	WALLCOVERING 6
WT-1	WINDOW TREATMENT 1
WT-2	WINDOW TREATMENT 2
WT-3	WINDOW TREATMENT 3
WT-4	WINDOW TREATMENT 4

MILLWORK FINISH/MISC.

GL-1	GLASS 1
GL-2	GLASS 2
GL-3	GLASS 3
PL-1	PLASTIC LAMINATE 1
PL-2	PLASTIC LAMINATE 2
PL-3	PLASTIC LAMINATE 3
QSF-1	QUARTZ SURFACE
SSF-1	SOLID SURFACE 1
ST-1	STONE 1
ST-2	STONE 2
HR-1	HANDRAIL 1
WP-1	WALL PANEL 1
WP-2	WALL PANEL 2
WP-3	WALL PANEL 3
WP-4	WALL PANEL 4
WPR1	WALL PROTECTION
WD-2	WOOD 2 (CABINETRY)

SYMBOL

- X/# — WALL FINISH
- X/# — FLOOR FINISH
- X/# — BASE FINISH
- X/# — MILLWORK
- FINISH A / FINISH B — FLOOR FINISH TRANSITION
- ALIGN

Finish Plan Legends

Scale N.T.S. | 1

WWCOT
Widom Wein Cohen O'Leary Terasawa

3130 Wilshire Boulevard
Sixth Floor
Santa Monica, California 90403
T (310) 828-0040
F (310) 453-9432
www.wwcot.com

Inland Empire
Palm Springs
Moorpark
Shanghai, China

RECEIVED
10:08 am, Aug 14, 2008
FRAMEMAX

Building Department Submittal: June 1, 2007
Issued For Bid:
Issued For Construction:

KEY PLAN

Project:
Jewish Home for The Aging
FOUNTAINVIEW AT EISENBERG VILLAGE
6440 Wilbur Ave
Reseda, CA. 91335

JEWISH HOME
JEWISH HOME FOR THE AGING
18855 Victory Blvd.
Reseda, CA 91335
Project Number: 04206.00

Enlarged Unit Finish Plans

Date: 04/05/2007
Drawn By:
Checked By:

A12.08
Sheet No.

File Path & Name: F:\PROJECTS\04206.00\A-CD\SHEETS\A12.08.DWG
© WWCOT 2006 May 25, 2007 - 04:04 pm

RECEIVED BY SUFFOLK ON 06/01/07

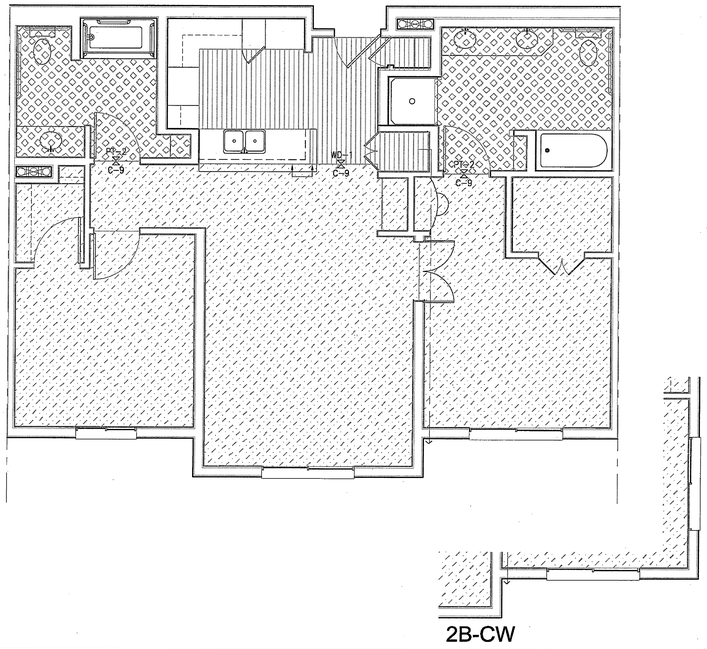

2B-C

2B-CW

Enlarged Unit Finish Plan 2B-C &CW — Scale 1/4" = 1'-0" — 13 — DWG



Enlarged Unit Finish Plan - 2B-E — Scale 1/4" = 1'-0" — 5 — DWG

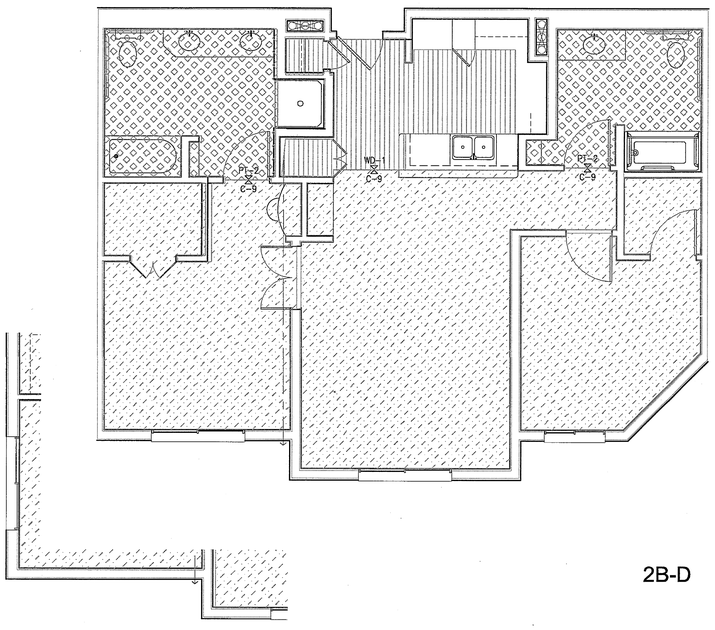

2B-D

2B-DW

Enlarged Unit Finish Plan 2B-D&DW — Scale 1/4" = 1'-0" — 13 — DWG



Enlarged Unit Finish Plan-2B-F — Scale 1/4" = 1'-0" — 5 — DWG

KEYNOTES

1. FLOOR FINISH TO ALIGN W/CEILING ABOVE. G.C. TO USE FULL TILE CARPET WHERE POSSIBLE.
2. LOCATION OF HANDRAIL (HR-1) IN CORRIDORS.

GENERAL NOTES:

1. REFER TO SPECIFICATION BOOK, SECTION 09000: COLORS & MATERIALS FOR ALL SCHEDULED INTERIOR FINISHES.
2. ALL GYP. BD. PARTITIONS & GYP. BD. CEILINGS TO RECEIVE PAINT THROUGHOUT, U.O.N. P-1 TO BE TYPICAL PAINT THROUGHOUT & GYP. BD. CEILING IN COMMON CORRIDORS, U.O.N.
UNITS & COMMON CORRIDOR ABOVE WAINSCOT WALLCOVERING TO BE P-2.
3. ALL BASE IN COMMON AREAS & UNITS TO BE B-1, U.O.N. ALL BASE IN EMPLOYEE AREAS OR BACK OF THE HOUSE TO BE B-2, U.O.N.
CONTRACTOR TO USE WALL BASE FROM COIL/ROLL. CONTRACTOR TO SCORE BACKSIDE FOR CRISP CORNERS.
4. ALL BROADLOOM CARPET TO BE INSTALLED DIRECT GLUED-DOWN. ALL CARPET TILES TO BE INSTALLED QUARTER-TURN.
5. TYP. CORRIDOR TO HAVE WALLCOVERING (WC1) UPTO 31" A.F.F. THROUGHOUT U.O.N.; PROVIDE & INSTALL HANDRAIL (HR1) ON ONE SIDE OF CORRIDOR AND WALLCOVERING WAINSCOT W/ J-MOLD ON THE OTHER SIDE. SEE ELEVATION ON SHEET A11.02.
6. TYPICAL UNIT FINISHES:
FLOORING FINISH- WOOD FLOORING (WD-1) IN FOYER & KITCHEN; CARPET (C9) IN DINING, LIVING ROOM & BEDROOM; PORCELAIN TILE (PT-2) IN BATHROOM
WALL FINISH- PAINT (P-2) THROUGHOUT
WINDOW COVERING- WT-2 AT EXTERIOR WINDOW
8. REFER TO SHEET A7.09 FOR ENLARGED RESTROOM FINISH PLAN.

FINISH LEGEND

FLOORING & BASE FINISH

C-1	CARPET 1	
C-2	CARPET 2	
C-3	(NOT USED)	
C-4	(NOT USED)	
C-5	(NOT USED)	
C-6	CARPET 6	
C-7	CARPET 7	
C-8	(NOT USED)	
C-9	CARPET 9	
CONC.	SEALED CONCRETE	
EPX-1	EPOXY RESIN FLOORING 1	
PT-1	PORCELAIN TILE 1 (12"X12")	
PT-2	PORCELAIN TILE 2 (FLOOR & WALL)	
PT-3	PORCELAIN TILE 3 (MOSAIC) (FLOOR & WALL)	
PTB-1	PORCELAIN TILE BASE 1	
PTB-2	PORCELAIN TILE BASE 2	
QT-1	QUARRY TILE	
QTB-1	QUARRY TILE BASE	
B-1	RESILIENT BASE 1	
B-2	RESILIENT BASE 2	
RF-1	RESILIENT FLOORING 1	
RF-2	RESILIENT FLOORING 2	
RF-3	RESILIENT FLOORING 3	
RF-4	RESILIENT FLOORING 3	
RF-5	RESILIENT FLOORING 3	
WD-1	WOOD FLOOR 1	

SYMBOL

- X/# — WALL FINISH
- X/# — FLOOR FINISH
- X/# — BASE FINISH
- X/# — MILLWORK
- FINISH A / FINISH B — FLOOR FINISH TRANSITION
- ALIGN

WALL FINISH

P-1	PAINT 1
P-2	PAINT 2
P-3	PAINT 3
P-4	PAINT 4
P-5	PAINT 5
P-6	PAINT 6
P-7	PAINT 7
P-8	PAINT 8
P-9	PAINT 9
P-10	PAINT 10
WC-1	WALLCOVERING 1
WC-2	WALLCOVERING 2
WC-3	WALLCOVERING 3
WC-4	WALLCOVERING 4
WC-5	WALLCOVERING 5
WC-6	WALLCOVERING 6
WT-1	WINDOW TREATMENT 1
WT-2	WINDOW TREATMENT 2
WT-3	WINDOW TREATMENT 3
WT-4	WINDOW TREATMENT 4

MILLWORK FINISH/MISC.

GL-1	GLASS 1
GL-2	GLASS 2
GL-3	GLASS 3
PL-1	PLASTIC LAMINATE 1
PL-2	PLASTIC LAMINATE 2
PL-3	PLASTIC LAMINATE 3
QSF-1	QUARTZ SURFACE
SSF-1	SOLID SURFACE 1
ST-1	STONE 1
ST-2	STONE 2
HR-1	HANDRAIL 1
WP-1	WALL PANEL 1
WP-2	WALL PANEL 2
WP-3	WALL PANEL 3
WP-4	WALL PANEL 4
WPR1	WALL PROTECTION
WD-2	WOOD 2 (CABINETRY)

Finish Plan Legends — Scale N.T.S. — 1 — DWG

WWC OT
Widom Wein Cohen O'Leary Terasawa

3130 Wilshire Boulevard
Sixth Floor
Santa Monica, California 90403
T (310) 828-0040
F (310) 453-9432
www.wwcot.com

Inland Empire
Palm Springs
Moorpark
Shanghai, China

RECEIVED
10:08 am, Aug 14, 2008
FRAMEMAX

Building Department Submittal: June 1, 2007
Issued For Bid:
Issued For Construction:

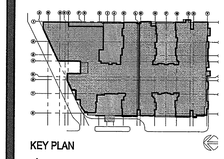

KEY PLAN

Project:
Jewish Home for The Aging
FOUNTAINVIEW AT EISENBERG VILLAGE
6440 Wilbur Ave
Reseda, CA. 91335

JEWISH HOME FOR THE AGING
18855 Victory Blvd.
Reseda, CA 91335

Project Number: 04206.00

Enlarged Unit Finish Plans

Date: 04/05/2007
Drawn By:
Checked By:

A12.09
Sheet No.

File Path & Name: F:\PROJECTS\04206-00\A-CD\SHEETS\A12.09.DWG
© WWCOT 2006 May 28, 2007 - 04:04 pm

RECEIVED BY SUFFOLK ON 06/01/07

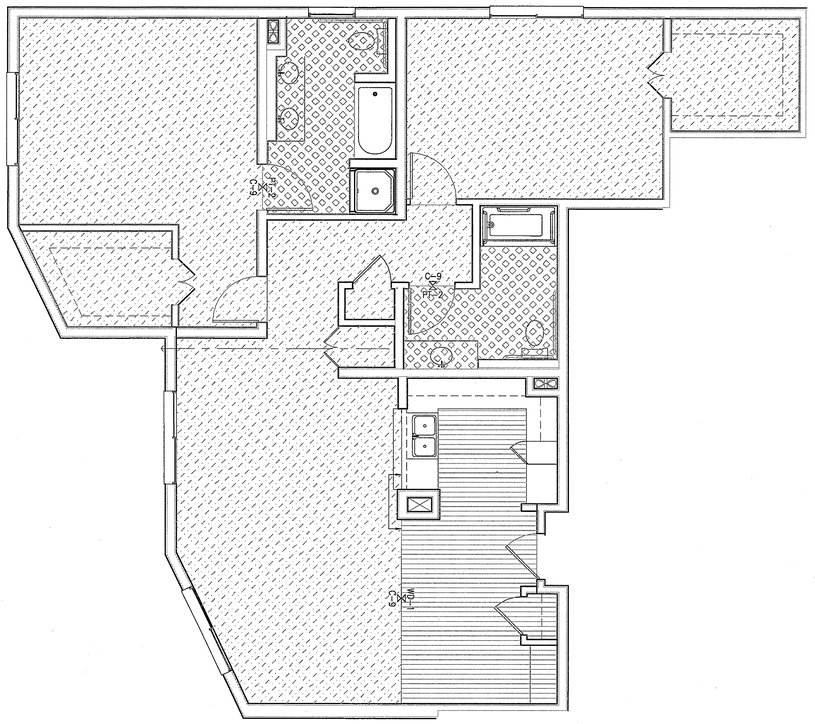

Enlarged Unit Finish Plan 2B-G

Scale 1/4" = 1'-0" — DWG -

KEYNOTES

1. FLOOR FINISH TO ALIGN W/CEILING ABOVE. G.C. TO USE FULL TILE CARPET WHERE POSSIBLE.
2. LOCATION OF HANDRAIL (HR-1) IN CORRIDORS.

GENERAL NOTES:

1. REFER TO SPECIFICATION BOOK, SECTION 09000: COLORS & MATERIALS FOR ALL SCHEDULED INTERIOR FINISHES.

2. ALL GYP. BD. PARTITIONS & GYP. BD. CEILINGS TO RECEIVE PAINT THROUGHOUT, U.O.N. P-1 TO BE TYPICAL PAINT THROUGHOUT & GYP. BD. CEILING IN COMMON CORRIDORS, U.O.N.
UNITS & COMMON CORRIDOR ABOVE WAINSCOT WALLCOVERING TO BE P-2.

3. ALL BASE IN COMMON AREAS & UNITS TO BE B-1, U.O.N. ALL BASE IN EMPLOYEE AREAS OR BACK OF THE HOUSE TO BE B-2, U.O.N.
CONTRACTOR TO USE WALL BASE FROM COIL/ROLL. CONTRACTOR TO SCORE BACKSIDE FOR CRISP CORNERS.

4. ALL BROADLOOM CARPET TO BE INSTALLED DIRECT GLUED-DOWN. ALL CARPET TILES TO BE INSTALLED QUARTER-TURN.

5. TYP. CORRIDOR TO HAVE WALLCOVERING (WC1) UPTO 31" A.F.F. THROUGHOUT U.O.N.; PROVIDE & INSTALL HANDRAIL (HR1) ON ONE SIDE OF CORRIDOR AND WALLCOVERING WAINSCOT W/ J-MOLD ON THE OTHER SIDE. SEE ELEVATION ON SHEET A11.02.

6. TYPICAL UNIT FINISHES:
FLOORING FINISH- WOODFLOORING (WD-1) IN FOYER & KITCHEN; CARPET (C9) IN DINING, LIVING ROOM & BEDROOM; PORCELAIN TILE (PT-2) IN BATHROOM
WALL FINISH- PAINT (P-2) THROUGHOUT
WINDOW COVERING- WT-2 AT EXTERIOR WINDOW

8. REFER TO SHEET A7.09 FOR ENLARGED RESTROOM FINISH PLAN.

FINISH LEGEND

FLOORING & BASE FINISH		WALL FINISH	
C-1	CARPET 1	P-1	PAINT 1
C-2	CARPET 2	P-2	PAINT 2
C-3	(NOT USED)	P-3	PAINT 3
C-4	(NOT USED)	P-4	PAINT 4
C-5	(NOT USED)	P-5	PAINT 5
C-6	CARPET 6	P-6	PAINT 6
C-7	CARPET 7	P-7	PAINT 7
C-8	(NOT USED)	P-8	PAINT 8
C-9	CARPET 9	P-9	PAINT 9
CONC.	SEALED CONCRETE	P-10	PAINT 10
EPX-1	EPOXY RESIN FLOORING 1	WC-1	WALLCOVERING 1
PT-1	PORCELAIN TILE 1 (12"X12")	WC-2	WALLCOVERING 2
PT-2	PORCELAIN TILE 2 (FLOOR & WALL)	WC-3	WALLCOVERING 3
PT-3	PORCELAIN TILE 3 (MOSAIC) (FLOOR & WALL)	WC-4	WALLCOVERING 4
PTB-1	PORCELAIN TILE BASE 1	WC-5	WALLCOVERING 5
PTB-2	PORCELAIN TILE BASE 2	WC-6	WALLCOVERING 6
QT-1	QUARRY TILE	WT-1	WINDOW TREATMENT 1
QTB-1	QUARRY TILE BASE	WT-2	WINDOW TREATMENT 2
B-1	RESILIENT BASE 1	WT-3	WINDOW TREATMENT 3
B-2	RESILIENT BASE 2	WT-4	WINDOW TREATMENT 4
RF-1	RESILIENT FLOORING 1	MILLWORK FINISH/MISC.	
RF-2	RESILIENT FLOORING 2	GL-1	GLASS 1
RF-3	RESILIENT FLOORING 3	GL-2	GLASS 2
RF-4	RESILIENT FLOORING 3	GL-3	GLASS 3
RF-5	RESILIENT FLOORING 3	PL-1	PLASTIC LAMINATE 1
WD-1	WOOD FLOOR 1	PL-2	PLASTIC LAMINATE 2
		PL-3	PLASTIC LAMINATE 3
		QSF-1	QUARTZ SURFACE
		SSF-1	SOLID SURFACE 1
		ST-1	STONE 1
		ST-2	STONE 2
		HR-1	HANDRAIL 1
		WP-1	WALL PANEL 1
		WP-2	WALL PANEL 2
		WP-3	WALL PANEL 3
		WP-4	WALL PANEL 4
		WPR1	WALL PROTECTION
		WD-2	WOOD 2 (CABINETRY)

SYMBOL

- X/# — WALL FINISH
- X/# — FLOOR FINISH
- X/# — BASE FINISH
- X/# — MILLWORK
- FINISH A / FINISH B — FLOOR FINISH TRANSITION
- ALIGN

Unit Accessory Notes and Schedules

Scale N.T.S. — DWG 1

WWC OT
Widom Wein Cohen O'Leary Terasawa

3130 Wilshire Boulevard
Sixth Floor
Santa Monica, California 90403
T (310) 828-0040
F (310) 453-9432
www.wwcot.com

Inland Empire
Palm Springs
Moorpark
Shanghai, China

RECEIVED
10:08 am, Aug 14, 2008
FRAMEMAX

Building Department Submittal: June 1, 2007
Issued For Bid: _____
Issued For Construction: _____

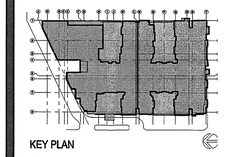

KEY PLAN

Project:
Jewish Home for The Aging
FOUNTAINVIEW AT EISENBERG VILLAGE
6440 Wilbur Ave
Reseda, CA. 91335

JEWISH HOME
JEWISH HOME FOR THE AGING
18855 Victory Blvd.
Reseda, CA 91335
Project Number: 04206.00

Enlarged Unit Finish Plan

Date: 04/05/2007
Drawn By: _____
Checked By: _____

A12.10
Sheet No.

File Path & Name: F:\PROJECTS\04206-00\A-CD\SHEETS\A12.10.DWG
© WWCOT 2006 May 28, 2007 - 04:04 pm

RECEIVED BY SUFFOLK ON 06/01/07

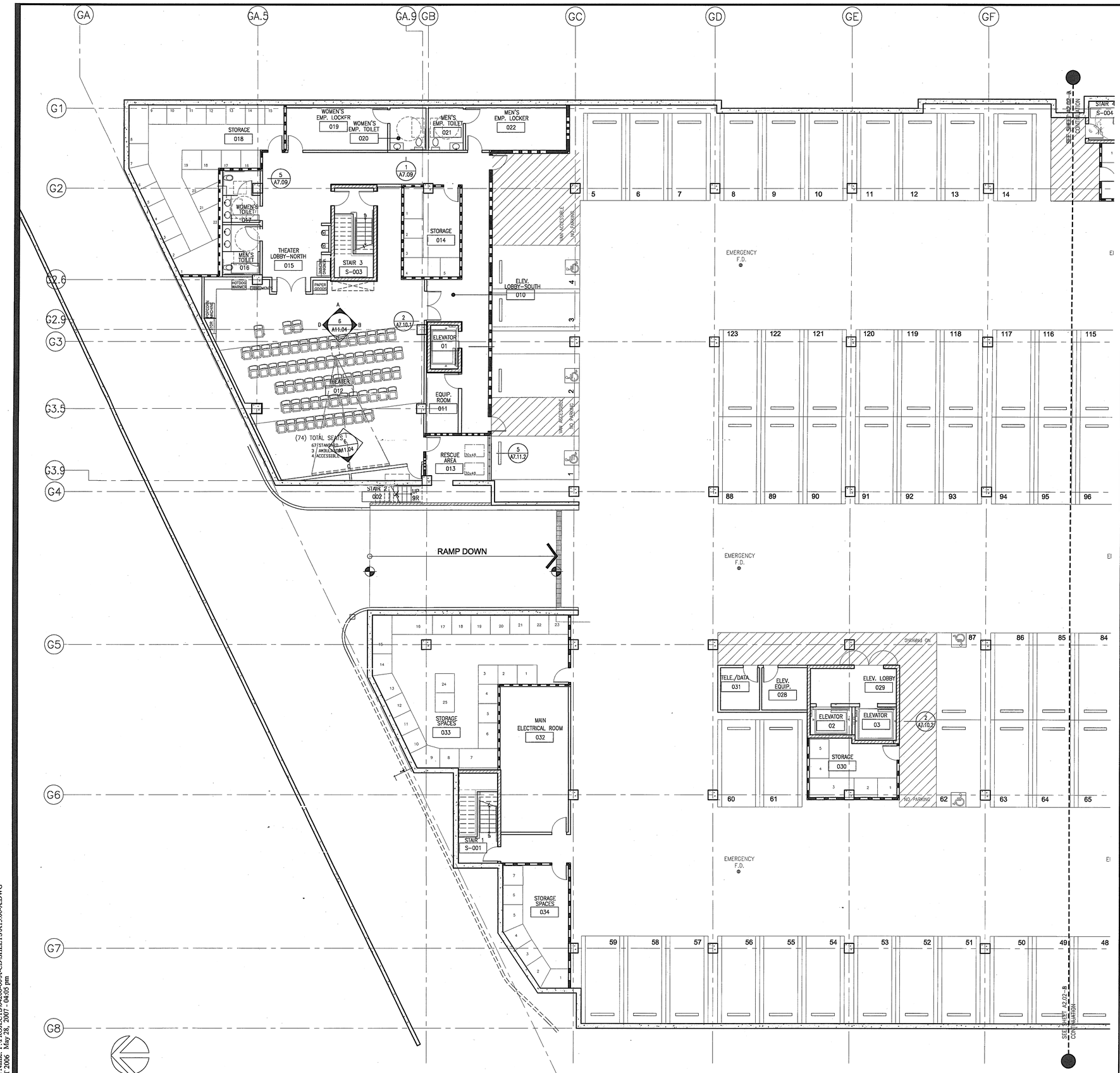

BASEMENT FLOOR FINISH PLAN (NORTH)

Scale 1/8" = 1'-0" 5

GENERAL NOTES:

1. FURNITURE PLAN FOR REFERENCE ONLY.

LEGEND

MILLWORK

Key Notes

Scale N.T.S. 1

WWC OT
Widom Wein Cohen O'Leary Terasawa

3130 Wilshire Boulevard
Sixth Floor
Santa Monica, California 90403
T (310) 828-0040
F (310) 453-9432
www.wwcot.com

Inland Empire
Palm Springs
Moorpark
Shanghai, China

RECEIVED
10:08 am, Aug 14, 2008
FRAMEMAX

Building Department Submittal: June 1, 2007
Issued For Bid:
Issued For Construction:

KEY PLAN

Project:
Jewish Home for The Aging
FOUNTAINVIEW AT EISENBERG VILLAGE
6440 Wilbur Ave
Reseda, CA. 91335

JEWISH HOME FOR THE AGING
18855 Victory Blvd.
Reseda, CA 91335
Project Number: 04206.00

Basement Finish Furniture & Millwork Plan (North)

Date: 04/05/2007
Drawn By:
Checked By:

A13.00-A
Sheet No.

File Path & Name: F:\PROJECTS\04206-00\A-CD\SHEETS\A13.00-A.DWG
© WWCOT 2006 May 28, 2007 - 04:05 pm

RECEIVED BY SUFFOLK ON 06/01/07

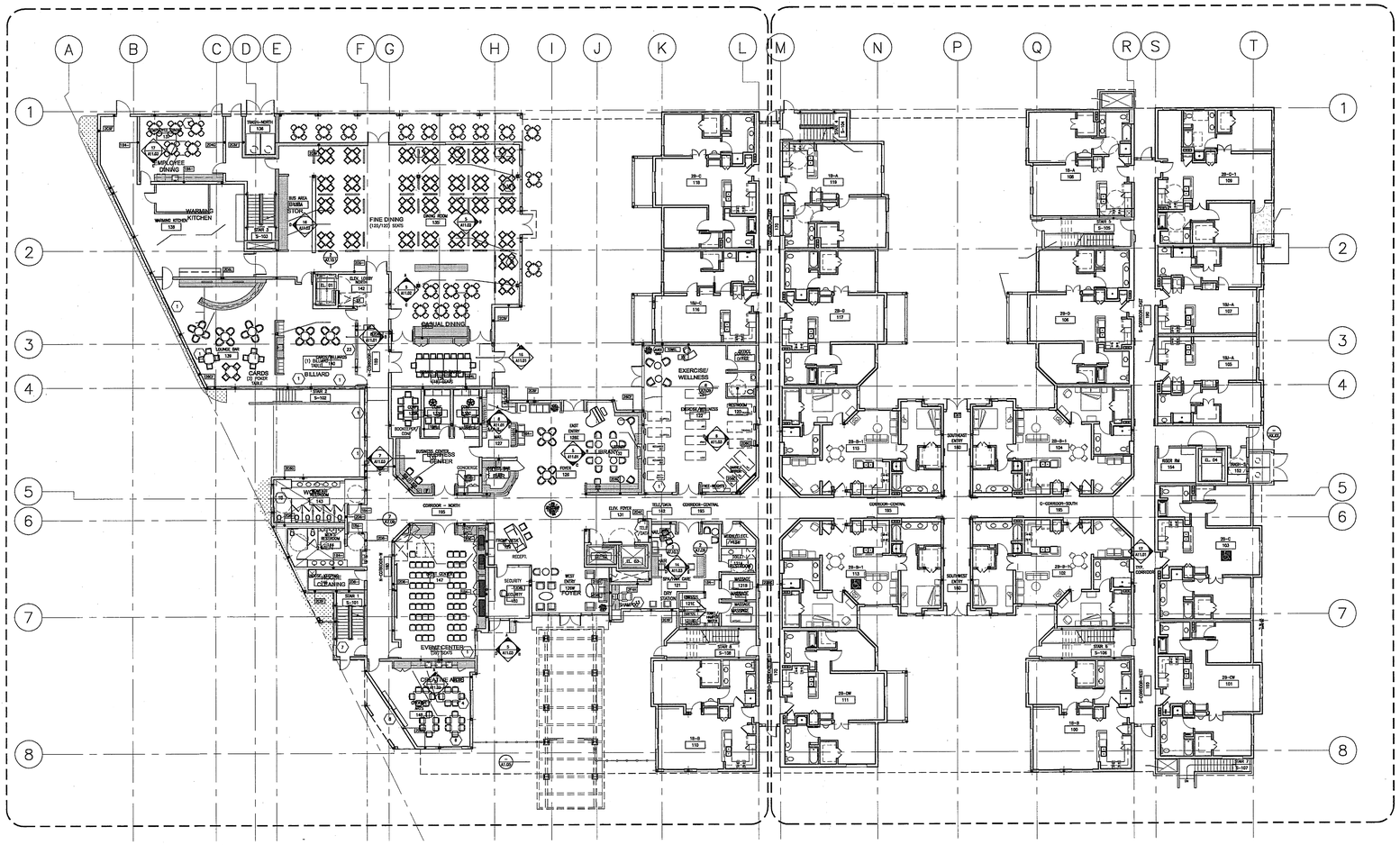

GROUND FLOOR PLAN

Scale 1/16" = 1'-0" (5)

1A NOT USED.

GENERAL NOTES:

1. FURNITURE PLAN FOR REFERENCE ONLY.

LEGEND

MILLWORK

Key Notes

Scale N.T.S. (1)

NOTE: 1.– FOR ALL DIMENSIONS TO REVEALS, SEE WALL SECTIONS ON 9/A5.01
2.– FOR WINDOW TYPE DEFINITIONS, SEE PLANS.

WWCOT
Widom Wein Cohen O'Leary Terasawa

3130 Wilshire Boulevard
Sixth Floor
Santa Monica, California 90403
T (310) 828-0040
F (310) 453-9432
www.wwcot.com

Inland Empire
Palm Springs
Moorpark
Shanghai, China

RECEIVED
10:08 am, Aug 14, 2008
FRAMEMAX

Building Department Submittal: June 1, 2007
Issued For Bid: _____
Issued For Construction: _____

KEY PLAN

Project:
Jewish Home for The Aging

FOUNTAINVIEW AT EISENBERG VILLAGE

6440 Wilbur Ave
Reseda, CA. 91335

JEWISH HOME

JEWISH HOME FOR THE AGING
18855 Victory Blvd.
Reseda, CA 91335

Project Number: 04206.00

Overall Ground Floor Furniture Plan

Date: 04/05/2007
Drawn By: _____
Checked By: _____

A13.01
Sheet No.

File Path & Name: F:\PROJECTS\04206-00\A-CD\SHEETS\A13.01.DWG
© WWCOT 2006 May 28, 2007 - 04:05 pm

RECEIVED BY SUFFOLK ON 06/01/07

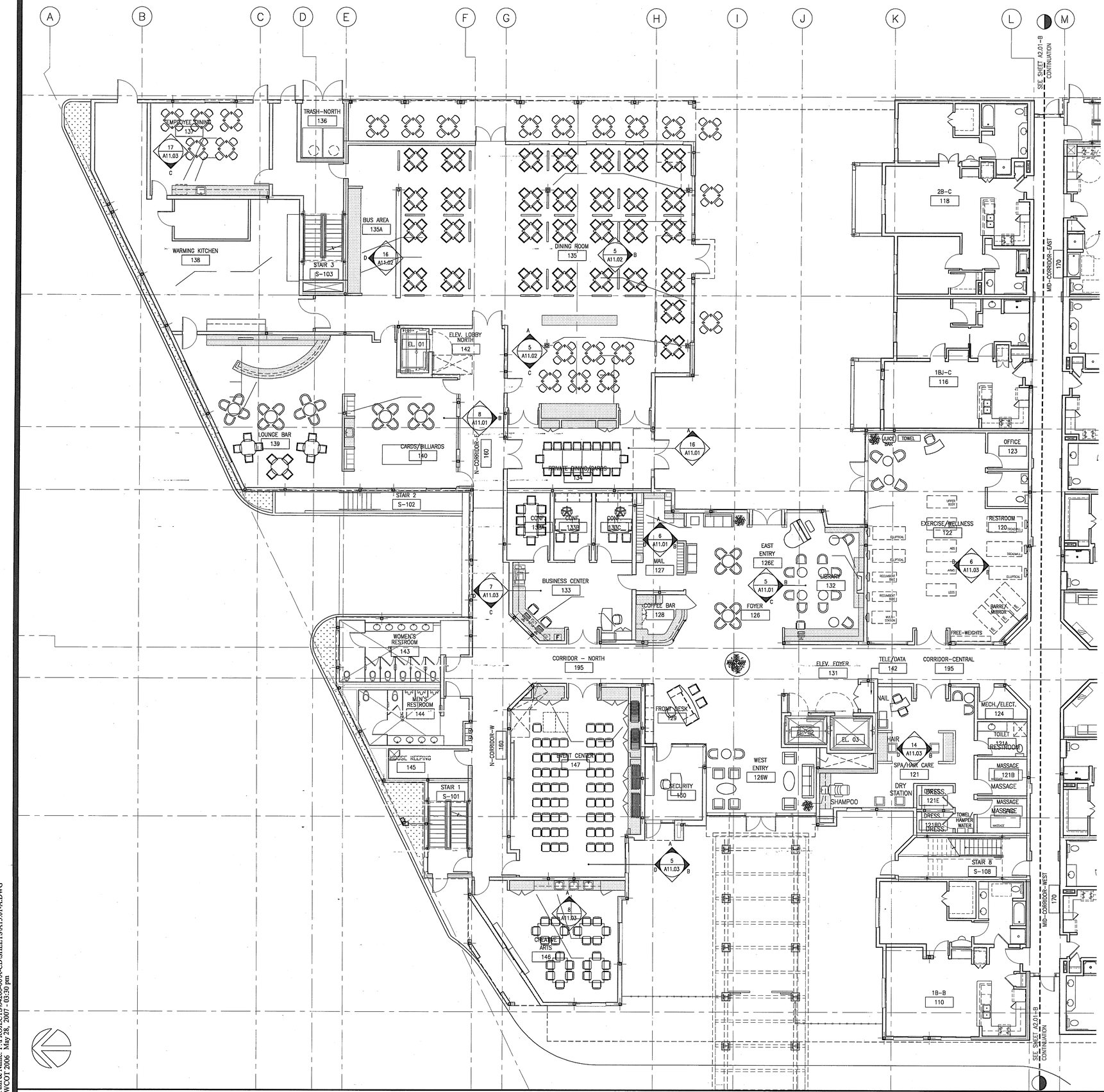

GENERAL NOTES:

1. FURNITURE PLAN FOR REFERENCE ONLY.

LEGEND

MILLWORK

GROUND FLOOR PLAN (NORTH)

Scale 1/8" = 1'-0" (5)

Key Notes

Scale N.T.S. (1)

WWC OT
Widom Wein Cohen O'Leary Terasawa

3130 Wilshire Boulevard
Sixth Floor
Santa Monica, California 90403
T (310) 828-0040
F (310) 453-9432
www.wwcot.com

Inland Empire
Palm Springs
Moorpark
Shanghai, China

RECEIVED
10:08 am, Aug 14, 2008
FRAMEMAX

Building Department Submittal: June 1, 2007
Issued For Bid:
Issued For Construction:

KEY PLAN

Project:
Jewish Home for The Aging
FOUNTAINVIEW AT EISENBERG VILLAGE
6440 Wilbur Ave
Reseda, CA. 91335

JEWISH HOME FOR THE AGING
18855 Victory Blvd.
Reseda, CA 91335
Project Number: 04206.00

GROUND FLOOR FURNITURE & MILLWORK PLAN (NOR

Date: 04/05/2007
Drawn By:
Checked By:

A13.01-A
Sheet No.

File Path & Name: F:\PROJECTS\04206-00\A-CD\SHEETS\A13.01-A.DWG
© WWCOT 2006 May 28, 2007 - 03:30 pm

RECEIVED BY SUFFOLK ON 06/01/07