GENERAL STRUCTURAL NOTES

I. GENERAL

1. MATERIALS AND WORKMANSHIP TO CONFORM WITH THE 2002 EDITION OF THE CITY OF LOS ANGELES BUILDING CODE AND THE REQUIREMENTS OF THE CONTRACT DOCUMENTS.

2. THESE GENERAL NOTES SUPPLEMENT THE REQUIREMENTS OF THE PROJECT SPECIFICATIONS. IN CASE OF CONFLICT BETWEEN THE PLANS AND SPECIFICATIONS, CONTACT THE OWNER'S REPRESENTATIVE.

3. REFERENCE TO CODES, RULES, REGULATIONS, STANDARDS, MANUFACTURER'S INSTRUCTIONS OR REQUIREMENTS OF REGULATORY AGENCIES IS TO THE LATEST PRINTED EDITION OF EACH IN EFFECT AT THE DATE OF SUBMISSION OF BID UNLESS THE DOCUMENT DATE IS SHOWN.

4. DRAWINGS INDICATE GENERAL AND TYPICAL DETAILS OF CONSTRUCTION. WHERE CONDITIONS ARE NOT SPECIFICALLY INDICATED BUT ARE OF SIMILAR CHARACTER TO DETAILS SHOWN, USE SIMILAR DETAILS OF CONSTRUCTION, SUBJECT TO REVIEW BY THE OWNER'S REPRESENTATIVE.

5. DETAILS ON SHEETS TITLED "TYPICAL DETAILS" APPLY TO SITUATIONS OCCURRING ON THE PROJECT THAT ARE THE SAME OR SIMILAR TO THOSE SPECIFICALLY REFERENCED. SUCH DETAILS ARE NOT NOTED AT EACH LOCATION THAT THEY OCCUR.

6. THE CONTRACTOR IS RESPONSIBLE FOR COORDINATING THE WORK OF ALL TRADES AND FOR CHECKING DIMENSIONS. NOTIFY THE OWNER'S REPRESENTATIVE OF ANY DISCREPANCIES AND RESOLVE BEFORE PROCEEDING WITH THE WORK.

7. DO NOT SCALE THE DRAWINGS.

8. PROVIDE MEASURES NECESSARY TO PROTECT THE STRUCTURE DURING CONSTRUCTION. SUCH MEASURES INCLUDE, BUT MAY NOT BE LIMITED TO, BRACING AND SHORING FOR LOADS DURING CONSTRUCTION. RETAIN A REGISTERED CIVIL ENGINEER WHOM IS PROPERLY QUALIFIED TO DESIGN BRACING, SHORING, ETC. VISITS TO THE SITE BY THE OWNER'S REPRESENTATIVE WILL NOT INCLUDE OBSERVATION OF THE ABOVE NOTED ITEMS.

9. INFORMATION SHOWN ON THE DRAWINGS RELATED TO EXISTING CONDITIONS REPRESENTS THE PRESENT KNOWLEDGE, BUT WITHOUT GUARANTEE OF ACCURACY. REPORT CONDITIONS THAT CONFLICT WITH THE CONTRACT DOCUMENTS TO THE OWNER'S REPRESENTATIVE. DO NOT DEVIATE FROM THE CONTRACT DOCUMENTS WITHOUT WRITTEN DIRECTION FROM THE OWNER'S REPRESENTATIVE.

10. REFER TO ARCHITECTURAL DRAWINGS FOR SIZE AND LOCATION OF FLOOR, ROOF AND WALL OPENINGS NOT SHOWN ON THE STRUCTURAL DRAWINGS. COORDINATE THE SIZE AND LOCATION OF OPENINGS ASSOCIATED WITH, BUT NOT LIMITED TO, ELECTRICAL, MECHANICAL AND PLUMBING TRADES. SUBMIT FINAL SIZING AND LOCATION REQUIREMENTS OF OPENINGS TO THE OWNER'S REPRESENTATIVE FOR REVIEW.

11. REFERENCE DATUM FOR THE ELEVATIONS IS FINISH FIRST FLOOR, ELEVATION = SEE ARQUITECTURAL DRAWINGS.

12. THE CONTRACTOR IS SOLELY RESPONSIBLE FOR PROVIDING A SAFE PLACE TO WORK AND MEETING THE REQUIREMENTS OF ALL APPLICABLE JURISDICTIONS. EXECUTE WORK TO ENSURE THE SAFETY OF PERSONS AND ADJACENT PROPERTY AGAINST DAMAGE BY FALLING DEBRIS AND OTHER HAZARDS IN CONNECTION WITH THIS WORK.

II. FOUNDATION AND SITE WORK

1. THE DESIGN OF THE FOUNDATION SYSTEM IS BASED UPON THE CRITERIA AND RECOMMENDATIONS CONTAINED IN THE GEOTECHNICAL INVESTIGATION REPORT ENTITLED "GEOTECHNICAL ENGINEERING INVESTIGATION" BY GEOTECHNOLOGIES, INC., DATED AUGUST 29, 2005. REPORTS ARE AVAILABLE FOR REVIEW.

2. GROUNDWATER ELEVATION IS ESTIMATED AT APPROXIMATELY 16 FEET TO 24 FEET BELOW THE EXISTING SITE GRADE. PROVIDE SITE DE-WATERING AS SPECIFIED BY OTHERS.

3. LOCATE AND PROTECT EXISTING UTILITIES TO REMAIN DURING AND/OR AFTER CONSTRUCTION.

4. REMOVE ABANDONED FOOTINGS, UTILITIES, ETC. WHICH INTERFERE WITH NEW CONSTRUCTION, UNLESS OTHERWISE INDICATED.

5. NOTIFY THE OWNER'S REPRESENTATIVE IF ANY BURIED STRUCTURES NOT INDICATED, SUCH AS CESSPOOLS, CISTERNS, FOUNDATIONS, ETC., ARE FOUND.

6. THE CONTRACTOR IS SOLELY RESPONSIBLE FOR EXCAVATION PROCEDURES INCLUDING LAGGING, SHORING, UNDERPINNING AND PROTECTION OF EXISTING CONSTRUCTION.

7. REMOVE LOOSE SOIL AND STANDING WATER FROM FOUNDATION EXCAVATIONS PRIOR TO PLACING CONCRETE.

8. EXCAVATIONS FOR FOUNDATIONS MUST BE ACCEPTED BY THE GEOTECHNICAL ENGINEER PRIOR TO PLACING REINFORCING AND CONCRETE. NOTIFY THE GEOTECHNICAL ENGINEER WHEN EXCAVATIONS ARE READY FOR INSPECTION.

9. PLACE BACKFILL BEHIND RETAINING WALLS AFTER CONCRETE OR MASONRY HAS ATTAINED FULL DESIGN STRENGTH. BRACE BUILDING AND PIT WALLS BELOW GRADE FROM LATERAL LOADS UNTIL ATTACHED FLOORS AND SLABS ON GRADE ARE COMPLETE AND HAVE ATTAINED FULL DESIGN STRENGTH.

10. MECHANICALLY COMPACT EXCAVATION BACKFILLS IN LAYERS IN ACCORDANCE WITH THE ASTM D1557 TEST METHOD. REFER TO THE GEOTECHNICAL INVESTIGATION REPORT FOR COMPACTION REQUIREMENTS.

III. FORMWORK

1. PROVIDE POUR POCKETS IN FORMS AND UNDER EXISTING STRUCTURAL MEMBERS AS REQUIRED TO PREVENT AIR POCKETS AND/OR "HONEYCOMB" UNDER OR AROUND THE EXISTING MEMBERS. CONCRETE CAST WITH AIR POCKETS AND/OR "HONEYCOMB" UNDER OR AROUND THE MEMBERS IS NOT ACCEPTABLE.

2. REMOVE FORMS AND SHORES IN ACCORDANCE WITH THE FOLLOWING:

LOCATION	REMOVE FORMS AND SHORES NO SOONER THAN
BOTTOM FORMS AND SHORES FOR MILDLY REINFORCED SLABS, BEAMS AND GIRDERS	7 DAYS, AND $f'c$ = 3500 PSI MINIMUM
SIDE FORMS FOR BEAMS AND GIRDERS	72 HOURS
COLUMNS AND WALLS	72 HOURS
FOOTINGS, PILE CAPS, AND GRADE BEAMS	48 HOURS

3. PROVIDE CURING WHERE FORMS ARE REMOVED IN LESS THAN 7 DAYS, INCLUDING BUT NOT LIMITED TO WALLS, COLUMNS, AND UNDERSIDE OF ELEVATED SLABS.

IV. REINFORCING STEEL

1. REINFORCING TO CONFORM TO THE FOLLOWING, UNLESS OTHERWISE NOTED:

LOCATION	TYPE
REINFORCING STEEL #7 AND SMALLER	ASTM A615, 60 KSI
REINFORCING STEEL #8 AND LARGER AND REINFORCING STEEL TO BE WELDED	ASTM A706, 60 KSI
SMOOTH STEEL WIRE FOR SPIRALS	ASTM A82, 70 KSI
WELDED STEEL WIRE FABRIC	ASTM A185, 70 KSI
SMOOTH DOWELS IN SLAB ON GRADE	ASTM A36, 36 KSI
DEFORMED BAR ANCHORS: NELSON/TRW TYPE "D2L" PER ICBO REPORT ER-5217 OR APPROVED EQUIVALENT	ASTM A496, 70 KSI

2. ACCURATELY POSITION, SUPPORT, AND SECURE REINFORCEMENT FROM DISPLACING DUE TO FORMWORK, CONSTRUCTION, OR CONCRETE PLACEMENT OPERATIONS. LOCATE AND SUPPORT REINFORCING BY METAL CHAIRS, RUNNERS, BOLSTERS, SPACERS, AND HANGERS AT A MAXIMUM 3-FOOT SPACING.

3. MECHANICALCOUPLERS: LENTON THREADED OR INTERLOCK COUPLERS BY ERICO, LARR# 24507 OR XTENDER BY HEADED REINFORCEMENT CORPORATION, LARR#25347 OR BAR-LOCK, DAYTON SUPERIOR CORPORATION, LARR#25342.

4. WELD REINFORCING STEEL IN ACCORDANCE WITH AWS D1.4 USING WELDERS CERTIFIED BY AWS AND THE CITY OF LOS ANGELES DEPARTMENT OF BUILDING AND SAFETY. CONTINUOUS INSPECTION BY A DEPUTY INSPECTOR IS REQUIRED.

5. WELDABILITY TEST OF EXISTING REINFORCING STEEL SHALL BE PERFORMED PRIOR TO WELDING. PROPER WELDING PROCEDURE SHALL BE SELECTED BASED ON THE CHEMICAL COMPOSITION OF EXISTING REINFORCING STEEL AND RECOMMENDATIONS FROM AWS D1.4.

6. TERMINATE REINFORCING STEEL IN STANDARD HOOKS, UNLESS OTHERWISE SHOWN.

7. PROVIDE REINFORCING SHOWN OR NOTED CONTINUOUS IN LENGTHS AS LONG AS PRACTICABLE.

V. CAST-IN-PLACE CONCRETE

1. CONCRETE IS REINFORCED AND CAST-IN-PLACE UNLESS OTHERWISE NOTED. WHERE REINFORCING IS NOT SPECIFICALLY SHOWN OR WHERE DETAILS ARE NOT GIVEN, PROVIDE REINFORCING SIMILAR TO THAT SHOWN FOR SIMILAR CONDITIONS, SUBJECT TO REVIEW BY THE OWNER'S REPRESENTATIVE.

2. ROUGHEN CONCRETE SURFACES OF CONSTRUCTION JOINTS TO 1/4 INCH AMPLITUDE AND CLEAN OF LAITANCE, FOREIGN MATTER, AND LOOSE PARTICLES. LOCATE CONSTRUCTION JOINTS AS SHOWN ON THE DRAWINGS. SUBMIT ALTERNATE JOINT LOCATIONS OR JOINTS NOT SHOWN TO THE OWNER'S REPRESENTATIVE FOR REVIEW AND APPROVAL PRIOR TO PROCEEDING WITH THE WORK.

3. AT LOCATIONS WHERE CONCRETE IS CAST AGAINST EXISTING CONCRETE, ROUGHEN CONTACT SURFACES TO 1/4 INCH AMPLITUDE AND CLEAN OF LAITANCE, FOREIGN MATTER, AND LOOSE PARTICLES.

4. AT LOCATIONS WHERE CONCRETE IS CAST AGAINST EXISTING MASONRY, THOROUGHLY ROUGHEN CONTACT SURFACES BY LIGHT SANDBLASTING OR OTHER SUITABLE MEANS AND CLEAN OF LAITANCE, FOREIGN MATTER, AND LOOSE PARTICLES.

5. REFER TO ARCHITECTURAL AND MECHANICAL DRAWINGS FOR LOCATIONS OF ADDITIONAL CONCRETE CURBS AND HOUSEKEEPING PADS NOT SHOWN.

6. CONCRETE CLEAR COVER TO REINFORCING BARS IS AS FOLLOWS, UNLESS OTHERWISE NOTED:

LOCATION	CLEAR COVER
CONCRETE PLACED AGAINST EARTH	3 INCHES
FORMED SURFACES EXPOSED TO WEATHER OR IN CONTACT WITH EARTH: #6 BARS AND LARGER #5 BARS AND SMALLER	 2 INCHES 1 1/2 INCHES
SLABS ON GRADE (TOP CLEARANCE)	1 1/2 INCHES
BEAMS, GIRDERS AND COLUMNS NOT EXPOSED TO WEATHER OR EARTH	1 1/2 INCHES
WALL OR SLAB SURFACES NOT EXPOSED TO WEATHER OR EARTH: #5 & SMALLER #6 & #7 #8,#9, #10 & #11 #14 & #18	 3/4 INCH 1 INCH 1 1/2 INCHES 2 1/2 INCHES

7. CONCRETE TYPES:

CLASS	28-DAY* STRENGTH	TYPE	LOCATION
A	4000 PSI	NORMAL WEIGHT	FOUNDATIONS, MISC. CURBS, HOUSE-KEEPING PADS, ETC.
B	4000 PSI	NORMAL WEIGHT	SLABS ON GRADE
C	4000 PSI	NORMAL WEIGHT	WALLS AND COLUMNS
D	5000 PSI	NORMAL WEIGHT	ELEVATED SLABS AND DROP PANELS

8. CEMENT SHALL CONFORM TO ASTM C150, TYPE I.

9. FINE AND COARSE AGGREGRATES SHALL CONFORM TO ASTM C33. LIGHTWEIGHT AGGREGATE SHALL CONFORM TO ASTM C330.

10. WATER SHALL BE CLEAN AND NOT DETRIMENTAL TO CONCRETE.

11. FOR EACH CLASS OF CONCRETE, A CONCRETE MIX DESIGN SHALL BE PREPARED BASED ON FIELD EXPERIENCE OR TRIAL MIXTURE IN CONFORMANCE TO ACI 211 AND ACI 301.

12. CONCRETE MIX DESIGNS SHALL BE REVIEWED BY THE OWNER'S TESTING AGENCY. CONTRACTOR SHALL SUBMIT CONCRETE MIX DESIGN FOR EACH CLASS OF CONCRETE, INCLUDING LETTER OF CONFORMANCE FROM OWNER'S TESTING AGENCY, TO OWNER'S REPRESENTATIVE FOR REVIEW. AS AN ALTERNATE TO THE LETTER OF CONFORMANCE FROM THE OWNER'S TESTING AGENCY, THE CONCRETE MIX DESIGN MAY PREPARED BY A CIVIL ENGINEER LICENSED IN THE STATE OF CALIFORNIA. THE MIX DESIGN SHALL BEAR THE STAMP AND SIGNATURE OF THE CIVIL ENGINEER.

13. CONTINUOUSLY MOIST CURE CONCRETE SLABS-ON-GRADE FOR 7 DAYS MINIMUM. WATER FOG SPRAYS, PONDING, SATURATED ABSORPTIVE COVERS, MOISTURE RETAINING COVERS OR CURING COMPOUNDS MAY BE USED.

14. CONCRETE FILL THICKNESS SHOWN ON THE FRAMING PLANS ARE MINIMUM THICKNESSES. NO ALLOWANCES HAVE BEEN SHOWN FOR ADDITIONAL CONCRETE FILL REQUIRED TO COMPENSATE FOR FRAMING, DECK, OR FORMWORK DEFLECTIONS TO MAINTAIN SURFACE TOLERANCES SPECIFIED.

15. NON-SHRINK GROUT, 7000 PSI: EUCLID CHEMICAL COMPANY'S "EUCO-NS"(LARR# 25221), L&M CRYSTEX (LARR# 25313), MASTER BUILDERS' "MASTERFLOW 713+" OR "MASTERFLOW 928 (LARR# 23137), OR FIVE STAR GROUT (LARR# 23616). WHERE HIGH FLUIDITY OR INCREASED PLACING TIME IS REQUIRED, USE EUCLID CHEMICAL COMPANY'S "EUCO HI-FLOW GROUT" OR MASTER BUILDERS' "MASTERFLOW 928".

16. CONTINUOUS INSPECTION BY A DEPUTY INSPECTOR IS REQUIRED FOR ALL CONCRETE WITH STRENGTH GREATER THAN 2500 PSI

VI. UNIT MASONRY

1. MINIMUM COMPRESSIVE STRENGTH OF MASONRY, F'M, EQUAL TO 1500 PSI AT 28 DAYS.

2. MASONRY UNITS: ASTM C-90, GRADE N, TYPE 1, NORMAL WEIGHT, HOLLOW, LOAD BEARING UNITS. MINIMUM COMPRESSIVE STRENGTH: 1900 PSI.

3. MORTAR: ASTM C-270, TYPE S.

4. GROUT: ASTM C-476, MINIMUM COMPRESSIVE STRENGTH: 2000 PSI.

5. REINFORCING STEEL:

LOCATION	TYPE
REINFORCING TO BE WELDED	ASTM A706, GRADE 60
ALL OTHER REINFORCING	ASTM A615, GRADE 60
JOINT REINFORCING	UBC STD 21-10

6. CENTER VERTICAL REINFORCING IN WALL UNLESS NOTED OTHERWISE.

7. LAY UNITS IN RUNNING BOND AND MAINTAIN VERTICAL CONTINUITY OF CORES OR CELL CAVITIES. USE OPEN END UNITS AT LOCATIONS OF VERTICAL REINFORCING. PLACE HORIZONTAL REINFORCING IN BOND BEAM UNITS.

8. FILL ALL CELLS SOLIDLY WITH GROUT. CLEAN CELLS AND BOND BEAMS OF MORTAR PROTRUSIONS AND DEBRIS BEFORE GROUTING.

9. DOWELS FROM THE FOUNDATION TO MATCH SIZE AND LOCATION OF VERTICAL REINFORCING IN MASONRY, UNLESS NOTED OTHERWISE.

10. PROVIDE VERTICAL CONTROL JOINTS IN THE WALLS AT LOCATIONS SHOWN ON THE DRAWINGS.

11. LOW-LIFT GROUTING: LAY UNITS A MAXIMUM OF 2 FEET HIGH BEFORE GROUTING. PLACE GROUT IN A CONTINUOUS PLACEMENT IN GROUT LIFTS NOT EXCEEDING 5 FEET. COMPLETELY GROUT THE FULL HEIGHT OF THE WALL SECTION IN ONE DAY WITH NO INTERRUPTIONS GREATER THAN ONE HOUR.

12. HIGH-LIFT GROUTING: LAY UNITS A MAXIMUM OF 12 FEET HIGH BEFORE GROUTING. PLACE GROUT IN A CONTINUOUS PLACEMENT IN GROUT LIFTS NOT EXCEEDING 6 FEET. COMPLETELY GROUT THE FULL HEIGHT OF THE WALL SECTION IN ONE DAY WITH NO INTERRUPTIONS GREATER THAN ONE HOUR. PROVIDE CLEANOUTS AT EVERY CELL ALONG THE BOTTOM COURSE OF EACH GROUT LIFT. USE SIKA GROUT AID TYPE II OR E-Z MIX ADMIXTURE IN THE GROUT TO REDUCE EARLY WATER LOSS AND PRODUCE AN EXPANSIVE ACTION.

13. CONTINUOUS INSPECTION OF MASONRY CONSTRUCTION BY A DEPUTY INSPECTOR IS REQUIRED.

VII. STRUCTURAL STEEL

1. STRUCTURAL STEEL TO CONFORM TO THE FOLLOWING UNLESS OTHERWISE NOTED:

SECTIONS	TYPE
ROLLED SHAPES WIDE FLANGES CHANNELS, ANGLES, & OTHER	 ASTM A992 (50 KSI) ASTM A36
PLATES COLUMN BASE PLATES BRACE GUSSET PLATES BEAM SHEAR CONNECTION PLATES COLUMN CONTINUITY PLATES BEAM STIFFENER PLATES DECK CLOSURE PLATES OTHER	 ASTM A572, GR 50 ASTM A572, GR 50 ASTM A572, GR 50 ASTM A572, GR 50 ASTM A572, GR 50 ASTM A572, GR 50 ASTM A572, GR 50
STEEL PIPE	ASTM A53 GRADE B
COLD FORMED HOLLOW STRUCTURAL SECTION (HSS)	ASTM A500 GRADE B
STAINLESS STEEL SHAPES, PLATES AND BARS	ASTM A276
BOLTS	ASTM A325X
MACHINE BOLTS	ASTM A307
ANCHOR BOLTS AND RODS	ASTM F1554, GR 55
THREADED AND HANGER ROD	ASTM A572, GR 50
WELDED SHEAR CONNECTORS NELSON/TRW PER ICBO REPORT ER-2614(OR APPROVED EQUIVALENT)	ASTM A 108, GRADE 1015 THROUGH 1020 (50 KSI)
WELDED THREADED STUDS NELSON/TRW OR APPROVED EQUIVALENT	ASTM A 108, GRADE 1015 THROUGH 1020
NUTS FOR BOLTS AND MACHINE BOLTS	ASTM A563
HARDENED WASHERS	ASTM F436
UNHARDENDED WASHERS	ASTM F844
PLAIN WASHERS	ANSI B18.22.1
BEVELED WASHERS	ANSI B18.23.1

2. HOT DIP GALVANIZE IN ACCORDANCE WITH ASTM A123 AND ASTM A153 STRUCTURAL STEEL AND FASTENERS THAT ARE PERMANENTLY EXPOSED TO THE WEATHER. REPAIR GALVANIZING AFTER WELDING IN ACCORDANCE WITH ASTM A780.

3. STRUCTURAL STEEL AND CONNECTIONS EXPOSED TO VIEW IN THE COMPLETED BUILDING ARE DESIGNATED ARCHITECTUALLY EXPOSED STRUCTURAL STEEL (AESS).

4. ARC-WELDING ELECTRODES/FILLER METALS TO BE LOW HYDROGEN TYPES E7XTX, E7XTXX OR E70XXX MINIMUM AS APPLICABLE. ELECTRODES WITH CHARPY V-NOTCH (CVN) TESTS VALUES OF A MINIMUM 20 FOOT-POUNDS AT -20 DEGREES FAHRENHEIT ARE TO BE USED AT THE FOLLOWING LOCATIONS:

- COMPLETE JOINT PENETRATION WELDS
- WELDS NOTED "CVN" ON THE DRAWINGS

5. FIELD WELDING SHALL BE PERFORMED BY WELDERS CERTIFIED BY AWS AND THE CITY OF LOS ANGELES DEPARTMENT OF BUILDING AND SAFETY.

6. WELDING SHALL BE DONE IN ACCORDANCE WITH A WELDING PROCEDURE SPECIFICATION (WPS) AS REQUIRED BY AWS D1.1.

7. WHERE FIELD WELDING IS NOTED, THE DESIGNATION IS GIVEN AS A SUGGESTED CONSTRUCTION PROCEDURE ONLY.

8. CONTINUOUS INSPECTION OF ALL FIELD WELDING IS REQUIRED BY A DEPUTY INSPECTOR.

9. SHOP WELDS MUST BE PERFORMED BY A CITY OF LOS ANGELES DEPARTMENT OF BUILDING AND SAFETY LICENSED FABRICATOR'S SHOP.

10. STRUCTURAL STEEL FABRICATOR SHALL BE LICENSED BY THE CITY OF LOS ANGELES DEPARTMENT OF BUILDING AND SAFETY.

11. PROVIDE NATURAL CAMBER UP, UNLESS NOTED OTHERWISE, EXCEPT AT CANTILEVERS. AT CANTILEVERS PROVIDE CAMBER SUCH THAT TIP OF CANTILEVER IS ABOVE FINAL ELEVATION.

12. SPLICE MEMBERS ONLY WHERE INDICATED.

VIII. COLD FORM STEEL FRAMING

1. ALL PHASES OF WORK PERTAINING TO COLD FORMED STEEL CONSTRUCTION SHALL CONFORM TO THE 2001 CALIFORNIA BUILDING CODE STANDARD (SPECIFICATION FOR THE DESIGN OF COLD FORMED STEEL STRUCTURAL MEMBERS, BY AMERICAN IRON AND STEEL INSTITUTE).

2. ALL COLD FORMED STEEL FRAMING SHALL BE GALVANIZED. FRAMING MEMBERS 16 GA. AND THICKER SHALL HAVE A MINIMUM YIELD STRESS OF 50 KSI AND CONFORM TO ASTM A653 SS GRADE 50, CLASS 1 OR 3, OR ASTM A1011 SS GRADE 50. FRAMING MEMBERS 18 GA. AND THINNER SHALL HAVE A MINIMUM YIELD STRESS OF 33 KSI AND CONFORM TO ASTM A653 SS GRADE 33 OR ASTM A1011 SS GRADE 33.

3. COLD FORMED STEEL FRAMING SHALL BE MANUFACTURED BY A MEMBER OF THE STEEL STUD MANUFACTURES ASSOCIATION AND SHALL CONFORM TO AND BE INSTALLED ACCORDING TO ICC ES LEGACY REPORT ER-4943P/LARR#25529 OR APPROVED EQUIVALENT.

4. PROVIDE ALL ACCESSORIES INCLUDING, BUT NO LIMITED TO TRACKS, CLIPS, WEB STIFFENERS, ANCHORS, FASTENING DEVICES, RESILIENT CLIPS, AND OTHER ACCESSORIES REQUIRED FOR A COMPLETE AND PROPER INSTALLATION, AND AS RECOMMENDED BY THE MANUFACTURER FOR THE STEEL MEMBER USED.

5. FASTENING OF COMPONENTS SHALL BE WITH DARTS SELF-DRILLING SCREWS WITH ICC ES LEGACY REPORT ER-5205/LARR #25294 OR GRABBER DRIVALL SELF DRILLING SCREWS WITH ICC ES LEGACY REPORT ER-5280/LARR #25509 OR APPROVED EQUIVALENT.

6. WELD COLD FORMED STEEL FRAMING IN ACCORDANCE WITH AWS D1.3 USING WELDERS CERTIFIED BY AWS AND THE CITY OF LOS ANGELES DEPARTMENT OF BUILDING AND SAFETY. CONTINUOUS INSPECTION BY A DEPUTY INSPECTOR IS REQUIRED.

7. ALL WELDS OF GALVANIZED STEEL SHALL BE TOUCHED UP WITH A ZINC-RICH PAINT. ALL WELDS OF CARBON SHEET STEEL SHALL BE TOUCHED UP WITH PAINT. WIRE TYING OF COMPONENTS SHALL NOT BE PERMITTED.

8. ALL FRAMING COMPONENTS SHALL BE CUT SQUARELY FOR ATTACHMENT TO PERPENDICULAR MEMBERS OR AS REQUIRED FOR AN ANGULAR FIT AGAINST ABUTTING MEMBERS.

9. CUTTING FLANGES AND STIFFENER LIPS ON AXIAL LOAD-BEARING STUDS IS PROHIBITED. NO STUD NOTCHING IS PERMITTED IN BEARING WALLS.

10. AXIAL LOAD-BEARING STUDS MUST BE FULLY SEATED INTO THE WALL TRACKS WITH A 1/16" MAXIMUM GAP BETWEEN THE STUD AND THE TRACK WEB.

11. SPLICES IN AXIALLY LOADED STUDS SHALL NOT BE PERMITTED.

12. PROVIDE BLOCKING OR BRIDGING BETWEEN AXIALLY LOADED STUDS AT 4 FEET ON CENTER MAXIMUM.

13. PROVIDE BLOCKING OR BRIDGING BETWEEN JOISTS OR RAFTERS WHICH ARE MORE THAN 6 FEET IN LENGTH.

14. OPENINGS IN STUD/JOIST WEBS OTHER THAN THE STANDARD HOLES PUNCHED BY THE MANUFACTURER ARE PROHIBITED UNLESS SPECIFICALLY NOTED IN THE DRAWINGS.

15. COLD-FORMED STEEL FABRICATOR SHALL BE LICENSED BY THE CITY OF LOS ANGELES DEPARTMENT OF BUILDING AND SAFETY.

16. SISTERED JOISTS SHALL BE CONNECTED 2 ROWS #10 SCREWS AT 24" O.C.

17. SEE SECTION X FOR SHOTPIN GENERAL NOTES.

18. PROVIDE FLOOR STIFFENERS PER TYPICAL DETAIL 17/S0.09.

IX. METAL DECKING

1. METAL DECKING SHALL BE MANUFACTURED BY AND INSTALLED ACCORDING TO VERCO MANUFACTURING, INC. AND ICBO # 2078P AND LARR # 23789.

2. METAL FLOOR AND ROOF DECK TO HAVE MINIMUM SECTION PROPERTIES SHOWN ON SHEET "TYPICAL DETAILS".

3. ALL FLOOR AND ROOF DECK TO BE GALVANIZED IN ACCORDANCE WITH ASTM A653 COATING CLASS G60. REPAIR DAMAGED COATING.

4. WHERE POSSIBLE, LAYOUT METAL DECK TO SPAN AT LEAST THREE SPANS CONTINUOUSLY. TERMINATE ENDS OVER SUPPORTS EXCEPT AT OPENINGS OR BUILDING EDGES WHERE METAL DECKS MAY BE CANTILEVERED AS SHOWN.

5. SECURE FLOOR AND ROOF METAL DECK TO THE STEEL FRAMEWORK TOGETHER AS SHOWN ON THE DRAWINGS.

X. MECHANICAL ANCHORS

1. EXPANSION OR WEDGE ANCHORS INTO CONCRETE: HILTI KWIK BOLT 3 (LARR #25577), SIMPSON STRONG-TIE WEDGE-ALL (LARR #24682) OR RAMSET RED HEAD TRUBOLT (LARR #02748). INSTALL ANCHORS IN ACCORDANCE WITH LA RESEARCH REPORT.

2. DROP-IN OR SHELL ANCHORS INTO CONCRETE: HILTI HDI (LARR #23709) OR RAMSET RED HEAD MULTI SET II (LARR #02748). INSTALL ANCHORS IN ACCORDANCE WITH LA RESEARCH REPORT.

3. HEAVY DUTY SLEEVE ANCHORS INTO CONCRETE: HILTI HSL ANCHORS (LARR #25290). INSTALL ANCHORS IN ACCORDANCE WITH LA RESEARCH REPORT.

4. ANCHORS INTO MASONRY: HILTI SLEEVE ANCHORS OR RAMSET/RED HEAD DYNABOLT SLEEVE ANCHORS. INSTALL ANCHORS IN ACCORDANCE WITH MANUFACTURERS RECOMMENDATIONS.

5. PROVIDE STAINLESS STEEL FASTENERS FOR EXTERIOR USE OR WHEN EXPOSED TO WEATHER. PROVIDE GALVANIZED CARBON STEEL ANCHORS AT OTHER LOCATIONS, UNLESS OTHERWISE NOTED.

6. IF REINFORCEMENT IS ENCOUNTERED DURING DRILLING, ABANDON AND SHIFT THE HOLE LOCATION TO AVOID THE REINFORCEMENT. PROVIDE A MINIMUM OF 2 ANCHOR DIAMETERS OR 1 INCH, WHICHEVER IS LARGER, OF SOUND CONCRETE BETWEEN THE DOWEL AND THE ABANDONED HOLE. FILL THE ABANDONED HOLE WITH NON-SHRINK GROUT. IF THE ANCHOR OR DOWEL MAY NOT BE SHIFTED AS NOTED ABOVE, THE ENGINEER WILL DETERMINE A NEW LOCATION.

7. LOCATE REINFORCEMENT AND CONFIRM FINAL ANCHOR LOCATIONS PRIOR TO FABRICATING PLATES, MEMBERS, OR OTHER STEEL ASSEMBLIES ATTACHED WITH MECHANICAL ANCHORS.

8. MINIMUM EMBEDMENT OF ANCHORS, UNLESS OTHERWISE NOTED:

ANCHOR DIA.	WEDGE EMBEDMENT	SLEEVE EMBEDMENT	SHELL EMBEDMENT
1/4"	2 1/2"	1 1/8"	1"
5/16"	–	1 1/4"	–
3/8"	3"	1 1/2"	1 9/16"
1/2"	4"	1 7/8"	2"
5/8"	4 1/2"	2"	2 1/2"
3/4"	5"	2 1/2"	3 3/16"
1"	7"	–	–

9. THE MINIMUM EMBEDMENT OF HSL ANCHORS IS PER THE ICBO REPORT, UNLESS OTHERWISE NOTED.

10. ANCHORS WILL BE PROOF-TESTED BY OWNER'S TESTING AND INSPECTION AGENCY.

11. IF ANY ANCHOR FAILS TESTING, REPLACE ANCHOR AND TEST ADDITIONAL ANCHORS OF THE SAME CATEGORY NOT PREVIOUSLY TESTED UNTIL TWENTY (20) CONSECUTIVE PASS, THEN RESUME INITIAL TESTING FREQUENCY.

12. APPLY TEST LOAD BY ANY METHOD THAT WILL EFFECTIVELY MEASURE THE TENSION ON THE ANCHOR SUCH AS DIRECT PULL WITH A HYDRAULIC JACK, TORQUE WRENCH, OR CALIBRATED SPRING-LOADING DEVICES, ETC.

13. TEST ANCHORS NO SOONER THAN 24 HOURS AFTER INSTALLATION.

14. REACTION LOADS FROM TEST FIXTURES MAY BE APPLIED CLOSE TO THE ANCHOR BEING TESTED, PROVIDED THE ANCHOR IS NOT RESTRAINED FROM WITHDRAWING BY A BASEPLATE OR OTHER FIXTURE. IF RESTRAINT IS FOUND, LOOSEN AND SHIM OR REMOVE THE FIXTURE PRIOR TO TESTING.

15. TEST 10% WEDGE OR SLEEVE ANCHORS PER ONE OF THE FOLLOWING METHODS:

A. HYDRAULIC RAM METHOD: APPLY PROOF TEST LOAD WITHOUT REMOVING THE NUT. IF IT IS NOT POSSIBLE TO TEST WITH THE NUT INSTALLED, REPLACE THE NUT WITH A THREADED COUPLER TO THE SAME TORQUE MEASURED WITH A TORQUE WRENCH, AND THEN APPLY THE LOAD. ANCHOR IS ACCEPTABLE IF NO MOVEMENT IS OBSERVED AT THE TEST LOAD. MOVEMENT MAY BE DETERMINED WHEN THE WASHER UNDER THE NUT BECOMES LOOSE.

B. TORQUE WRENCH METHOD: TEST ANCHORS TO THE TORQUE LOAD INDICATED IN THE TABLE BELOW WITHIN THE FOLLOWING LIMITS:

1. FOR 3/8" SLEEVE ANCHORS, ONE-QUARTER TURN OF THE NUT. FOR OTHER SLEEVE ANCHORS, ONE-HALF TURN OF THE NUT.

2. FOR WEDGE ANCHORS, ONE-HALF TURN OF THE NUT.

16. TEST SHELL TYPE ANCHORS PER ONE OF THE FOLLOWING METHODS:

A. VISUALLY INSPECT 25% OF ANCHORS FOR FULL EXPANSION AS EVIDENCED BY THE LOCATION OF THE EXPANSION PLUG IN THE ANCHOR BODY. ACCEPTABLE PLUG LOCATION OF A FULLY EXPANDED ANCHOR IS RECOMMENDED BY THE MANUFACTURER, OR IN THE ABSENCE OF SUCH RECOMMENDATION, WILL BE DETERMINED FOLLOWING THE MANUFACTURER'S INSTALLATION INSTRUCTIONS. ALSO, PROOF LOAD 5% OF THE ANCHORS TO THE TENSION LOAD VALUES INDICATED IN THE TABLE BELOW, BUT NOT LESS THAN THREE ANCHORS PER DAY FOR EACH DIFFERENT PERSON OR CREW INSTALLING ANCHORS.

B. TEST 10% OF ANCHORS USING THE HYDRAULIC RAM METHOD. ANCHOR IS ACCEPTABLE IF NO MOVEMENT IS OBSERVED AT THE TEST LOAD. MOVEMENT MAY BE DETERMINED WHEN THE WASHER UNDER THE NUT BECOMES LOOSE.

TEST VALUES: (HARD ROCK OR LIGHTWEIGHT CONCRETE)

ANCHOR DIA (IN)	WEDGE		SLEEVE		SHELL	
	TENSION LOAD (LBS)	TORQUE LOAD (FT-LBS)	TENSION LOAD (LBS)	TORQUE LOAD (FT-LBS)	TENSION LOAD (LBS)	TORQUE LOAD (FT-LBS)
1/4	800	10	400	4	1000	–
5/16	–	–	400	5	1400	–
3/8	1100	25	700	10	1800	–
1/2	2000	50	900	20	2700	–
5/8	2300	80	100	45	3700	–
3/4	3700	150	1400	90	5400	–
1	5800	250	–	–	–	–

17. TEST 10% OF HSL ANCHORS IN ACCORDANCE WITH THE MANUFAC

GENERAL STRUCTURAL NOTES

I. GENERAL

1. MATERIALS AND WORKMANSHIP TO CONFORM WITH THE 2002 EDITION OF THE CITY OF LOS ANGELES BUILDING CODE AND THE REQUIREMENTS OF THE CONTRACT DOCUMENTS.

2. THESE GENERAL NOTES SUPPLEMENT THE REQUIREMENTS OF THE PROJECT SPECIFICATIONS. IN CASE OF CONFLICT BETWEEN THE PLANS AND SPECIFICATIONS, CONTACT THE OWNER'S REPRESENTATIVE.

3. REFERENCE TO CODES, RULES, REGULATIONS, STANDARDS, MANUFACTURER'S INSTRUCTIONS OR REQUIREMENTS OF REGULATORY AGENCIES IS TO THE LATEST PRINTED EDITION OF EACH IN EFFECT AT THE DATE OF SUBMISSION OF BID UNLESS THE DOCUMENT DATE IS SHOWN.

4. DRAWINGS INDICATE GENERAL AND TYPICAL DETAILS OF CONSTRUCTION. WHERE CONDITIONS ARE NOT SPECIFICALLY INDICATED BUT ARE OF SIMILAR CHARACTER TO DETAILS SHOWN, USE SIMILAR DETAILS OF CONSTRUCTION, SUBJECT TO REVIEW BY THE OWNER'S REPRESENTATIVE.

5. DETAILS ON SHEETS TITLED "TYPICAL DETAILS" APPLY TO SITUATIONS OCCURRING ON THE PROJECT THAT ARE THE SAME OR SIMILAR TO THOSE SPECIFICALLY REFERENCED. SUCH DETAILS ARE NOT NOTED AT EACH LOCATION THAT THEY OCCUR.

6. THE CONTRACTOR IS RESPONSIBLE FOR COORDINATING THE WORK OF ALL TRADES AND FOR CHECKING DIMENSIONS. NOTIFY THE OWNER'S REPRESENTATIVE OF ANY DISCREPANCIES AND RESOLVE BEFORE PROCEEDING WITH THE WORK.

7. DO NOT SCALE THE DRAWINGS.

8. PROVIDE MEASURES NECESSARY TO PROTECT THE STRUCTURE DURING CONSTRUCTION. SUCH MEASURES INCLUDE, BUT MAY NOT BE LIMITED TO, BRACING AND SHORING FOR LOADS DURING CONSTRUCTION. RETAIN A REGISTERED CIVIL ENGINEER WHOM IS PROPERLY QUALIFIED TO DESIGN BRACING, SHORING, ETC. VISITS TO THE SITE BY THE OWNER'S REPRESENTATIVE WILL NOT INCLUDE OBSERVATION OF THE ABOVE NOTED ITEMS.

9. INFORMATION SHOWN ON THE DRAWINGS RELATED TO EXISTING CONDITIONS REPRESENTS THE PRESENT KNOWLEDGE, BUT WITHOUT GUARANTEE OF ACCURACY. REPORT CONDITIONS THAT CONFLICT WITH THE CONTRACT DOCUMENTS TO THE OWNER'S REPRESENTATIVE. DO NOT DEVIATE FROM THE CONTRACT DOCUMENTS WITHOUT WRITTEN DIRECTION FROM THE OWNER'S REPRESENTATIVE.

10. REFER TO ARCHITECTURAL DRAWINGS FOR SIZE AND LOCATION OF FLOOR, ROOF AND WALL OPENINGS NOT SHOWN ON THE STRUCTURAL DRAWINGS. COORDINATE THE SIZE AND LOCATION OF OPENINGS ASSOCIATED WITH, BUT NOT LIMITED TO, ELECTRICAL, MECHANICAL AND PLUMBING TRADES. SUBMIT FINAL SIZING AND LOCATION REQUIREMENTS OF OPENINGS TO THE OWNER'S REPRESENTATIVE FOR REVIEW.

11. REFERENCE DATUM FOR THE ELEVATIONS IS FINISH FIRST FLOOR, ELEVATION = SEE ARQUITECTURAL DRAWINGS.

12. THE CONTRACTOR IS SOLELY RESPONSIBLE FOR PROVIDING A SAFE PLACE TO WORK AND MEETING THE REQUIREMENTS OF ALL APPLICABLE JURISDICTIONS. EXECUTE WORK TO ENSURE THE SAFETY OF PERSONS AND ADJACENT PROPERTY AGAINST DAMAGE BY FALLING DEBRIS AND OTHER HAZARDS IN CONNECTION WITH THIS WORK.

II. FOUNDATION AND SITE WORK

1. THE DESIGN OF THE FOUNDATION SYSTEM IS BASED UPON THE CRITERIA AND RECOMMENDATIONS CONTAINED IN THE GEOTECHNICAL INVESTIGATION REPORT ENTITLED "GEOTECHNICAL ENGINEERING INVESTIGATION" BY GEOTECHNOLOGIES, INC., DATED AUGUST 29, 2005. REPORTS ARE AVAILABLE FOR REVIEW.

2. GROUNDWATER ELEVATION IS ESTIMATED AT APPROXIMATELY 16 FEET TO 24 FEET BELOW THE EXISTING SITE GRADE. PROVIDE SITE DE-WATERING AS SPECIFIED BY OTHERS.

3. LOCATE AND PROTECT EXISTING UTILITIES TO REMAIN DURING AND/OR AFTER CONSTRUCTION.

4. REMOVE ABANDONED FOOTINGS, UTILITIES, ETC. WHICH INTERFERE WITH NEW CONSTRUCTION, UNLESS OTHERWISE INDICATED.

5. NOTIFY THE OWNER'S REPRESENTATIVE IF ANY BURIED STRUCTURES NOT INDICATED, SUCH AS CESSPOOLS, CISTERNS, FOUNDATIONS, ETC., ARE FOUND.

6. THE CONTRACTOR IS SOLELY RESPONSIBLE FOR EXCAVATION PROCEDURES INCLUDING LAGGING, SHORING, UNDERPINNING AND PROTECTION OF EXISTING CONSTRUCTION.

7. REMOVE LOOSE SOIL AND STANDING WATER FROM FOUNDATION EXCAVATIONS PRIOR TO PLACING CONCRETE.

8. EXCAVATIONS FOR FOUNDATIONS MUST BE ACCEPTED BY THE GEOTECHNICAL ENGINEER PRIOR TO PLACING REINFORCING AND CONCRETE. NOTIFY THE GEOTECHNICAL ENGINEER WHEN EXCAVATIONS ARE READY FOR INSPECTION.

9. PLACE BACKFILL BEHIND RETAINING WALLS AFTER CONCRETE OR MASONRY HAS ATTAINED FULL DESIGN STRENGTH. BRACE BUILDING AND PIT WALLS BELOW GRADE FROM LATERAL LOADS UNTIL ATTACHED FLOORS AND SLABS ON GRADE ARE COMPLETE AND HAVE ATTAINED FULL DESIGN STRENGTH.

10. MECHANICALLY COMPACT EXCAVATION BACKFILLS IN LAYERS IN ACCORDANCE WITH THE ASTM D1557 TEST METHOD. REFER TO THE GEOTECHNICAL INVESTIGATION REPORT FOR COMPACTION REQUIREMENTS.

III. FORMWORK

1. PROVIDE POUR POCKETS IN FORMS AND UNDER EXISTING STRUCTURAL MEMBERS AS REQUIRED TO PREVENT AIR POCKETS AND/OR "HONEYCOMB" UNDER OR AROUND THE EXISTING MEMBERS. CONCRETE CAST WITH AIR POCKETS AND/OR "HONEYCOMB" UNDER OR AROUND THE MEMBERS IS NOT ACCEPTABLE.

2. REMOVE FORMS AND SHORES IN ACCORDANCE WITH THE FOLLOWING:

LOCATION	REMOVE FORMS AND SHORES NO SOONER THAN
COLUMNS AND WALLS	72 HOURS
FOOTINGS, PILE CAPS, AND GRADE BEAMS	48 HOURS

3. PROVIDE CURING WHERE FORMS ARE REMOVED IN LESS THAN 7 DAYS, INCLUDING BUT NOT LIMITED TO WALLS, COLUMNS, AND UNDERSIDE OF ELEVATED SLABS.

IV. REINFORCING STEEL

1. REINFORCING TO CONFORM TO THE FOLLOWING, UNLESS OTHERWISE NOTED:

LOCATION	TYPE
REINFORCING STEEL #7 AND SMALLER	ASTM A615, 60 KSI
REINFORCING STEEL #8 AND LARGER AND REINFORCING STEEL TO BE WELDED	ASTM A706, 60 KSI

2. ACCURATELY POSITION, SUPPORT, AND SECURE REINFORCEMENT FROM DISPLACING DUE TO FORMWORK, CONSTRUCTION, OR CONCRETE PLACEMENT OPERATIONS. LOCATE AND SUPPORT REINFORCING BY METAL CHAIRS, RUNNERS, BOLSTERS, SPACERS, AND HANGERS AT A MAXIMUM 3-FOOT SPACING.

3. MECHANICALCOUPLERS: LENTON THREADED OR INTERLOCK COUPLERS BY ERICO, LARR# 24507 OR XTENDER BY HEADED REINFORCEMENT CORPORATION, LARR#25347 OR BAR-LOCK, DAYTON SUPERIOR CORPORATION, LARR#25342.

4. WELD REINFORCING STEEL IN ACCORDANCE WITH AWS D1.4 USING QUALIFIED WELDERS.

5. WELDABILITY TEST OF EXISTING REINFORCING STEEL SHALL BE PERFORMED PRIOR TO WELDING. PROPER WELDING PROCEDURE SHALL BE SELECTED BASED ON THE CHEMICAL COMPOSITION OF EXISTING REINFORCING STEEL AND RECOMMENDATIONS FROM AWS D1.4.

6. TERMINATE REINFORCING STEEL IN STANDARD HOOKS, UNLESS OTHERWISE SHOWN.

7. PROVIDE REINFORCING SHOWN OR NOTED CONTINUOUS IN LENGTHS AS LONG AS PRACTICABLE.

V. CAST-IN-PLACE CONCRETE

1. CONCRETE IS REINFORCED AND CAST-IN-PLACE UNLESS OTHERWISE NOTED. WHERE REINFORCING IS NOT SPECIFICALLY SHOWN OR WHERE DETAILS ARE NOT GIVEN, PROVIDE REINFORCING SIMILAR TO THAT SHOWN FOR SIMILAR CONDITIONS, SUBJECT TO REVIEW BY THE OWNER'S REPRESENTATIVE.

2. ROUGHEN CONCRETE SURFACES OF CONSTRUCTION JOINTS TO 1/4 INCH AMPLITUDE AND CLEAN OF LAITANCE, FOREIGN MATTER, AND LOOSE PARTICLES. LOCATE CONSTRUCTION JOINTS AS SHOWN ON THE DRAWINGS. SUBMIT ALTERNATE JOINT LOCATIONS OR JOINTS NOT SHOWN TO THE OWNER'S REPRESENTATIVE FOR REVIEW AND APPROVAL PRIOR TO PROCEEDING WITH THE WORK.

3. AT LOCATIONS WHERE CONCRETE IS CAST AGAINST EXISTING CONCRETE, ROUGHEN CONTACT SURFACES TO 1/4 INCH AMPLITUDE AND CLEAN OF LAITANCE, FOREIGN MATTER, AND LOOSE PARTICLES.

4. AT LOCATIONS WHERE CONCRETE IS CAST AGAINST EXISTING MASONRY, THOROUGHLY ROUGHEN CONTACT SURFACES BY LIGHT SANDBLASTING OR OTHER SUITABLE MEANS AND CLEAN OF LAITANCE, FOREIGN MATTER, AND LOOSE PARTICLES.

5. REFER TO ARCHITECTURAL AND MECHANICAL DRAWINGS FOR LOCATIONS OF ADDITIONAL CONCRETE CURBS AND HOUSEKEEPING PADS NOT SHOWN.

6. CONCRETE CLEAR COVER TO REINFORCING BARS IS AS FOLLOWS, UNLESS OTHERWISE NOTED:

LOCATION	CLEAR COVER
CONCRETE PLACED AGAINST EARTH	3 INCHES
FORMED SURFACES EXPOSED TO WEATHER OR IN CONTACT WITH EARTH: #6 BARS AND LARGER #5 BARS AND SMALLER	 2 INCHES 1 1/2 INCHES
SLABS ON GRADE (TOP CLEARANCE)	1 1/2 INCHES
BEAMS, GIRDERS AND COLUMNS NOT EXPOSED TO WEATHER OR EARTH	1 1/2 INCHES
WALL OR SLAB SURFACES NOT EXPOSED TO WEATHER OR EARTH: #5 & SMALLER #6 & #7 #8,#9, #10 & #11 #14 & #18	 3/4 INCH 1 INCH 1 1/2 INCHES 2 1/2 INCHES

7. CONCRETE TYPES:

CLASS	28-DAY* STRENGTH	TYPE	LOCATION
A	3000 PSI	NORMAL WEIGHT	FOUNDATIONS, STEM WALLS

8. CEMENT SHALL CONFORM TO ASTM C150, TYPE I.

9. FINE AND COARSE AGGREGRATES SHALL CONFORM TO ASTM C33. LIGHTWEIGHT AGGREGATE SHALL CONFORM TO ASTM C330.

10. WATER SHALL BE CLEAN AND NOT DETRIMENTAL TO CONCRETE.

11. FOR EACH CLASS OF CONCRETE, A CONCRETE MIX DESIGN SHALL BE PREPARED BASED ON FIELD EXPERIENCE OR TRIAL MIXTURE IN CONFORMANCE TO ACI 211 AND ACI 301.

12. CONCRETE MIX DESIGNS SHALL BE REVIEWED BY THE OWNER'S TESTING AGENCY. CONTRACTOR SHALL SUBMIT CONCRETE MIX DESIGN FOR EACH CLASS OF CONCRETE, INCLUDING LETTER OF CONFORMANCE FROM OWNER'S TESTING AGENCY, TO OWNER'S REPRESENTATIVE FOR REVIEW. AS AN ALTERNATE TO THE LETTER OF CONFORMANCE FROM THE OWNER'S TESTING AGENCY, THE CONCRETE MIX DESIGN MAY PREPARED BY A CIVIL ENGINEER LICENSED IN THE STATE OF CALIFORNIA. THE MIX DESIGN SHALL BEAR THE STAMP AND SIGNATURE OF THE CIVIL ENGINEER.

13. CONTINUOUSLY MOIST CURE CONCRETE SLABS-ON-GRADE FOR 7 DAYS MINIMUM. WATER FOG SPRAYS, PONDING, SATURATED ABSORPTIVE COVERS, MOISTURE RETAINING COVERS OR CURING COMPOUNDS MAY BE USED.

14. CONCRETE FILL THICKNESS SHOWN ON THE FRAMING PLANS ARE MINIMUM THICKNESSES. NO ALLOWANCES HAVE BEEN SHOWN FOR ADDITIONAL CONCRETE FILL REQUIRED TO COMPENSATE FOR FRAMING, DECK, OR FORMWORK DEFLECTIONS TO MAINTAIN SURFACE TOLERANCES SPECIFIED.

15. NON-SHRINK GROUT, 7000 PSI: EUCLID CHEMICAL COMPANY'S "EUCO-NS"(LARR# 25221), L&M CRYSTEX (LARR# 25313), MASTER BUILDERS' "MASTERFLOW 713+" OR "MASTERFLOW 928 (LARR# 23137), OR FIVE STAR GROUT (LARR# 23616). WHERE HIGH FLUIDITY OR INCREASED PLACING TIME IS REQUIRED, USE EUCLID CHEMICAL COMPANY'S "EUCO HI-FLOW GROUT" OR MASTER BUILDERS' "MASTERFLOW 928".

VI. UNIT MASONRY

1. MINIMUM COMPRESSIVE STRENGTH OF MASONRY, F'M, EQUAL TO 1500 PSI AT 28 DAYS.

2. MASONRY UNITS: ASTM C-90, GRADE N, TYPE 1, NORMAL WEIGHT, HOLLOW, LOAD BEARING UNITS. MINIMUM COMPRESSIVE STRENGTH: 1900 PSI.

3. MORTAR: ASTM C-270, TYPE S.

4. GROUT: ASTM C-476, MINIMUM COMPRESSIVE STRENGTH: 2000 PSI.

5. REINFORCING STEEL:

LOCATION	TYPE
REINFORCING TO BE WELDED	ASTM A706, GRADE 60
ALL OTHER REINFORCING	ASTM A615, GRADE 60
JOINT REINFORCING	UBC STD 21-10

6. CENTER VERTICAL REINFORCING IN WALL UNLESS NOTED OTHERWISE.

7. LAY UNITS IN RUNNING BOND AND MAINTAIN VERTICAL CONTINUITY OF CORES OR CELL CAVITIES. USE OPEN END UNITS AT LOCATIONS OF VERTICAL REINFORCING. PLACE HORIZONTAL REINFORCING IN BOND BEAM UNITS.

8. FILL ALL CELLS SOLIDLY WITH GROUT. CLEAN CELLS AND BOND BEAMS OF MORTAR PROTRUSIONS AND DEBRIS BEFORE GROUTING.

9. DOWELS FROM THE FOUNDATION TO MATCH SIZE AND LOCATION OF VERTICAL REINFORCING IN MASONRY, UNLESS NOTED OTHERWISE.

10. PROVIDE VERTICAL CONTROL JOINTS IN THE WALLS AT LOCATIONS SHOWN ON THE DRAWINGS.

11. LOW-LIFT GROUTING: LAY UNITS A MAXIMUM OF 2 FEET HIGH BEFORE GROUTING. PLACE GROUT IN A CONTINUOUS PLACEMENT IN GROUT LIFTS NOT EXCEEDING 5 FEET. COMPLETELY GROUT THE FULL HEIGHT OF THE WALL SECTION IN ONE DAY WITH NO INTERRUPTIONS GREATER THAN ONE HOUR.

12. HIGH-LIFT GROUTING: LAY UNITS A MAXIMUM OF 12 FEET HIGH BEFORE GROUTING. PLACE GROUT IN A CONTINUOUS PLACEMENT IN GROUT LIFTS NOT EXCEEDING 6 FEET. COMPLETELY GROUT THE FULL HEIGHT OF THE WALL SECTION IN ONE DAY WITH NO INTERRUPTIONS GREATER THAN ONE HOUR. PROVIDE CLEANOUTS AT EVERY CELL ALONG THE BOTTOM COURSE OF EACH GROUT LIFT. USE SIKA GROUT AID TYPE II OR E-Z MIX ADMIXTURE IN THE GROUT TO REDUCE EARLY WATER LOSS AND PRODUCE AN EXPANSIVE ACTION.

VII. DESIGN CRITERIA

1. APPLICABLE CODE: 2002 CITY OF LOS ANGELES BUILDING CODE.

2. FOUNDATIONS HAVE BEEN DESIGNED WITH THE FOLLOWING CRITERIA:
   SITE WALL FOOTINGS:
   ALLOWABLE NET SOIL PRESSURE = 1,000 PSF
   COEFFICIENT OF FRICTION = 0.25
   PASSIVE RESISTANCE = 300 PSF/FT (3,000 PSF MAXIMUM)

3. NEW SOIL RETAINING STRUCTURES HAVE BEEN DESIGNED WITH THE FOLLOWING CRITERIA:

   CANTILEVER WALL EQUIVALENT FLUID PRESSURE = 45 PCF

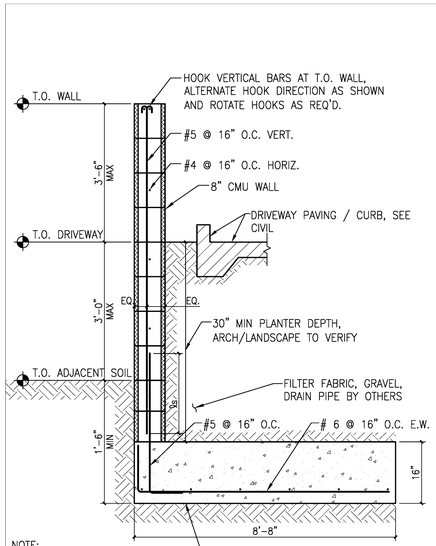

NOTE:
PROVIDE SPECIAL INSPECTION FOR CONCRETE AND MASONRY

9 SITE RETAINING WALL
N.T.S.

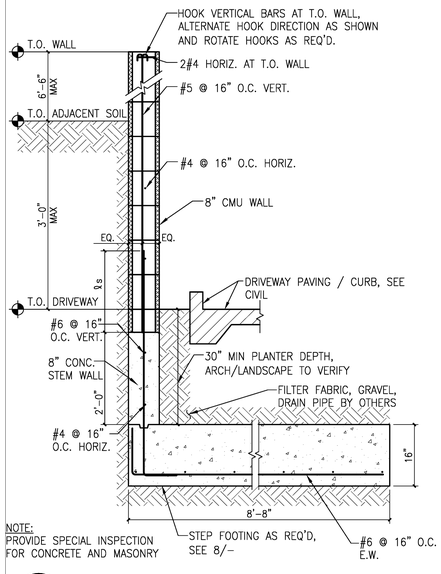

NOTE:
PROVIDE SPECIAL INSPECTION FOR CONCRETE AND MASONRY

10 SITE RETAINING WALL
N.T.S.

CMU REINF DEVELOPMENT & SPLICE LENGTHS (INCHES)																		
BAR LOCATION	CONC. MASONRY UNIT		BAR SIZE															
	TYPE	STRENGTH	#3		#4		#5		#6		#7		#8		#9			
			ℓd	ℓs	ℓd	ℓs	ℓd	ℓs	ℓd	ℓs	ℓd	ℓs	ℓd	ℓs	ℓd	ℓs		
CONC MASONRY UNIT	–	f'm ≥ 1.5 ksi	25	25	33	33	41	41	49	49	57	57	65	65	74	74		

NOTES:
1. ℓd = DEVELOPMENT LENGTH
2. ℓs = LAP SPLICE LENGTH

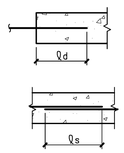

5 CMU REINFORCEMENT DEVELOPMENT & SPLICE LENGTHS



A - BAR SPACING FOR NON-SPLICED BARS IN CONCRETE



B - BAR SPACING FOR BARS SPLICED W/ NON-CONTACT LAP IN CONCRETE

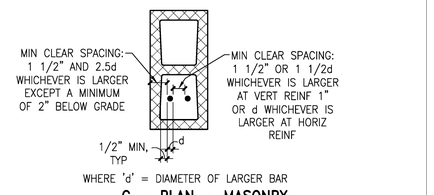

C - PLAN - MASONRY

6 BAR SPACING
N.T.S.

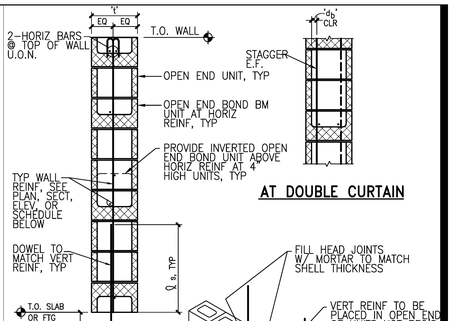

AT DOUBLE CURTAIN

SECTION

ISOMETRIC (DBL CURTAIN SIM)

WALL REINFORCING SCHEDULE			
NOM WALL THICKNESS 't'	VERT REINF	HORIZ REINF	REMARKS
6"			NOT USED
8"	SEE DETAILS	SEE DETAILS	
12"			NOT USED
16"			NOT USED

NOTES:
1. ALL CELLS TO BE FULLY GROUTED.
2. SECURE REINF AT 200 d MAX.
3. CONCAVE JOINTS, TYP, U.O.N.

2 WALL REINFORCING
N.T.S.

| CONCRETE REINFORCING DEVELOPMENT & SPLICE LENGTHS (INCHES) | | | | | | | | | | | | | | | | | |

GENERAL STRUCTURAL NOTES (CONTINUED)

XI. ADHESIVE ANCHORS AND DOWELS

1. ANCHORS AND DOWELS INSTALLED INTO CONCRETE AND GROUT-FILLED MASONRY UNITS: CIA-GEL 7000 BY COVERT OPERATIONS (LARR #25029), HIT HY-150 BY HILTI (LARR #24257), OR EPOXY-TIE SET BY SIMPSON STRONG-TIE (LARR #25279). EMBEDMENT DEPTH FOR ANCHORS AND DOWELS IS AS FOLLOWS, UNLESS OTHERWISE NOTED. THE TESTING LABORATORY WILL PERFORM TENSION TESTS ON 25% OF ANCHORS AND DOWELS TO THE FOLLOWING TEST LOADS:

ROD DIA OR BAR SIZE	EMBEDMENT	TEST LOAD	BASE MATERIAL
3/8"	4"	1800#	CONCRETE
1/2"	5"	3200#	CONCRETE
5/8"	6"	5000#	CONCRETE
3/4"	7"	7100#	CONCRETE
7/8"	9"	9700#	CONCRETE
1"	11"	12800#	CONCRETE
#3	5"	3000#	CONCRETE
#4	6 1/2"	5400#	CONCRETE
#5	8"	8400#	CONCRETE
#6	10"	11900#	CONCRETE
#7	12"	16200#	CONCRETE
#8	14"	21300#	CONCRETE
3/8"	3 1/2"	3100#	MASONRY
1/2"	4 1/2"	3600#	MASONRY
5/8"	5"	4500#	MASONRY
3/4"	6 5/8"	7500#	MASONRY

2. ANCHORS: ASTM A36 THREADED RODS WITH ASTM A 563 GRADE A NUTS AND ANSI B18.22.1 TYPE A WASHERS, UNLESS OTHERWISE NOTED. ANCHORS DESIGNATED AS ASTM A193 GRADE B7 THREADED RODS TO USE ASTM A 563 GRADE DH HEAVY HEX NUTS AND ASTM F 436 WASHERS.

3. DOWELS: ASTM A615 GRADE 60 REINFORCING STEEL.

4. REMOVE GREASE, OIL, RUST, AND OTHER LAITANCE FROM RODS AND DOWELS PRIOR TO INSTALLATION.

5. REPLACE ANCHORS AND DOWELS THAT FAIL DURING TESTING AND RETEST. IF MORE THAN 10% OF THE TESTED DOWELS AND ANCHORS FAIL TO ACHIEVE THE SPECIFIED TEST LOAD, TEST 100% OF THE DOWELS AND ANCHORS INSTALLED IN THE LAST 2 DAYS OF ANCHOR INSTALLATION.

6. THE DIAMETER OF THE HOLES IS PER THE MANUFACTURER'S INSTRUCTIONS. DRILL HOLES FOR ANCHORS AND DOWELS IN UNREINFORCED BRICK MASONRY WITH A NON-IMPACT ROTARY DRILL. PRIOR TO INSTALLING ANCHORS OR DOWELS, WIRE BRUSH HOLES TO REMOVE RESIDUE, BLOW OUT WITH OIL-FREE COMPRESSED AIR, AND ALLOW HOLE TO DRY.

7. PLACE ADHESIVE WITH THE MANUFACTURER'S RECOMMENDED APPLICATION TOOL TO A DEPTH AS SPECIFIED BY THE MANUFACTURER AND TO MINIMIZE THE AMOUNT OF ADHESIVE THAT WILL OVERFLOW OUT OF THE HOLE WHEN THE BAR IS INSERTED. REMOVE EXCESS ADHESIVE ON THE ADJACENT SURFACES.

8. INSERT THE ANCHOR OR DOWEL IN THE HOLE WITH A TWISTING MOTION TO THE REQUIRED EMBEDMENT DEPTH. DO NOT PUMP THE ANCHOR OR DOWEL IN AND OUT OF THE HOLE.

9. WEDGE BARS TIGHT AND CENTERED IN THE HOLE WITH WOODEN WEDGES (GOLF TEES) TO HOLD IT IN PLACE UNTIL THE ADHESIVE SETS.

10. IF REINFORCEMENT IS ENCOUNTERED DURING DRILLING, ABANDON AND SHIFT THE HOLE LOCATION TO AVOID THE REINFORCEMENT. PROVIDE A MINIMUM OF 2 ANCHOR DIAMETERS OR 1 INCH, WHICHEVER IS LARGER, OF SOUND CONCRETE BETWEEN THE DOWEL AND THE ABANDONED HOLE. FILL THE ABANDONED HOLE WITH NON-SHRINK GROUT. IF THE ANCHOR OR DOWEL MAY NOT BE SHIFTED AS NOTED ABOVE, THE ENGINEER WILL DETERMINE A NEW LOCATION.

11. LOCATE REINFORCEMENT AND CONFIRM FINAL ANCHOR LOCATIONS PRIOR TO FABRICATING PLATES, MEMBERS, OR OTHER STEEL ASSEMBLIES ATTACHED WITH ADHESIVE ANCHORS.

XII. STRUCTURAL TESTS, INSPECTIONS, AND OBSERVATIONS

1. AN INDEPENDENT TESTING AGENCY AND SPECIAL INSPECTORS WILL BE RETAINED BY THE OWNER TO PERFORM THE FOLLOWING TESTS AND INSPECTION. PROVIDE ACCESS AND FURNISH SAMPLES TO THE AGENCY AS REQUIRED BY THE CONTRACT DOCUMENTS.

2. IF INITIAL TESTS OR INSPECTIONS MADE BY THE OWNER'S TESTING AGENCY REVEAL THAT ANY PORTION OF THE WORK DOES NOT COMPLY WITH THE CONTRACT DOCUMENTS, ADDITIONAL TESTS, INSPECTIONS, AND NECESSARY REPAIRS WILL BE MADE AT THE CONTRACTOR'S EXPENSE.

3. THE FOLLOWING ITEMS REQUIRE TESTS AND INSPECTIONS IN ACCORDANCE WITH THE REQUIREMENTS OF THE CHAPTER "STRUCTURAL TESTS AND INSPECTIONS" OF THE CODE OF THE GOVERNING JURISDICTION AS NOTED IN THE GENERAL SECTION OF THESE GENERAL NOTES. ADDITIONAL ITEMS AND REQUIREMENTS FOR TESTS AND INSPECTIONS ARE IDENTIFIED IN THE SPECIFICATIONS.

STRUCTURAL STEEL					
✓	Review Mill Certificates & Test Reports				
✓	Review Welding Procedure Specification & Welder Certifications				
	Sample & Test Sections		As Specified		As Required
	Sample & Test High-Strength Bolts & Washers				
	Shop Material Identification				
	Field Erection Inspection				
	Fabrication Inspection			Shop	Field
✓	Welding Inspection			Shop ✓	Field
✓	Non-Destructive Weld Test			Shop ✓	Field
✓	Bolting Inspection			Shop ✓	Field
✓	Composite Stud Inspection & Testing				
	Steel Joist Load Test				
METAL DECK					
✓	Review Mill Certificates & Test Reports				
	Placement Inspection				
✓	Welding & Fastening Inspection				
REINFORCING STEEL					
✓	Review Mill Certificates & Test Reports				
	Sample & Test:		Reinforcing Bars		Welded Wire Fabric
✓	Placement Inspection				
✓	Welding Inspection				
	Test Existing Reinforcing for Weldability				
TENSIONING STEEL					
	Review Mill Certificates & Test Reports				
	Sample & Test				
	Placement Inspection				
	Stressing Inspection				
COLD FORMED STEEL FRAMING					
✓	Review Certificates & Test Reports				
✓	Field Erection Inspection				
✓	Cold Form Metal Framing Welding				
MASONRY					
✓	Review Certificates & Test Reports				
✓	Sample & Test				
✓	Placement Inspection of Units				
	Core Test				
EARTHWORK/FOUNDATIONS					
✓	Review of Import Material Test Reports				
✓	Acceptance Tests of Materials				
✓	Placement Excavation Inspection		Continuous	✓	As Ordered
	Compaction Test				
	Bearing Capacity Test				
	Pile Driving Inspection				
	Pier & Caisson Drilling Inspection				
MISCELLANEOUS					
✓	Drilled-In Concrete Anchors				
✓	Epoxy or Grouted Dowels				
✓	Bolts Cast in Concrete				
	Ceiling Hanger & Bracing Wires				

CONCRETE, SHOTCRETE, GROUT & MORTAR				
Concrete	Shotcrete	Grout	Mortar	
				Aggregate Tests
				Cement Test
✓		✓	✓	Mix Design Review
				Continuous Batch Plant Inspection
				Batch Plant Inspections
✓		✓	✓	Cast, Pickup, And Compression Test Samples
✓				Slump, Entrained Air, & Temperature Test
				Unit Weight Test | Wet | Dry
				Shrinkage Test
✓		✓	✓	Placement Inspection
				Core & Test

4. THE REQUIREMENTS FOR TESTING AND INSPECTION LISTED ABOVE MAY CHANGE DUE TO THE METHOD OF CONSTRUCTION SELECTED BY THE CONTRACTOR.

5. THE TESTING AGENCY AND SPECIAL INSPECTOR SHALL REVIEW CONSTRUCTION DOCUMENTS AND COORDINATE WITH CONTRACTOR TO DEVELOP A PLAN FOR TESTING AND INSPECTION. SUBMIT THE PLAN FOR TESTING AND INSPECTION TO OWNER'S REPRESENTATIVE FOR REVIEW.

6. NOTIFY THE ENGINEER AT SIGNIFICANT CONSTRUCTION STAGES 72 HOURS IN ADVANCE AND PROVIDE ACCESS FOR THE FOLLOWING STRUCTURAL OBSERVATIONS:

A. FOUNDATIONS
 1. REINFORCEMENT

B. STEEL FRAMING
 1. GENERAL
 2. METAL DECKING

C. COLD FORMED STEEL FRAMING
 1. GENERAL
 2. SHEARWALLS AND HOLD-DOWNS

D. CONCRETE
 1. WALL REINFORCEMENT
 2. COLUMN REINFORCEMENT
 3. ELEVATED SLABS AND SLABS-ON-GRADE

E. MASONRY
 1. REINFORCEMENT
 2. MEMBER CONNECTIONS TO MASONRY

XIII. DESIGN CRITERIA

1. APPLICABLE CODE: 2002 CITY OF LOS ANGELES BUILDING CODE.

2. FOUNDATIONS HAVE BEEN DESIGNED WITH THE FOLLOWING CRITERIA:

INDIVIDUAL SPREAD FOOTINGS:
ALLOWABLE NET SOIL PRESSURE FOR DL + LL = 3,000* PSF
ALLOWABLE NET SOIL PRESSURE FOR DL + LL + EQ = 4,000* PSF
COEFFICIENT OF FRICTION = 0.25
PASSIVE RESISTANCE = 300 PSF/FT (3,000 PSF MAXIMUM)

CONTINUOUS STRIP/ WALL FOOTINGS:
ALLOWABLE NET SOIL PRESSURE FOR DL + LL = 2,500* PSF
ALLOWABLE NET SOIL PRESSURE FOR DL + LL + EQ = 3,333* PSF
COEFFICIENT OF FRICTION = 0.25
PASSIVE RESISTANCE = 300 PSF/FT (3,000 PSF MAXIMUM)

*ALLOWABLE SOIL BEARING PRESSURES ARE FOR FOOTINGS HAVING A WIDTH AND DEPTH EQUAL TO 24 INCHES. THE ALLOWABLE PRESSURES MAY BE INCREASED BY 400 PSF FOR EACH ADDITIONAL FOOT OF DEPTH AND 250 PSF FOR EACH ADDITIONAL FOOT OF WIDTH UP TO A MAXIMUM VALUE OF 4,000 PSF.

3. NEW SOIL RETAINING STRUCTURES HAVE BEEN DESIGNED WITH THE FOLLOWING CRITERIA:

CANTILEVER WALL EQUIVALENT FLUID PRESSURE = 45 PCF
RESTRAINED WALL EQUIVALENT FLUID PRESSURE = 65 PCF

4. GRAVITY LOADS:

A. DEAD LOADS – VARY BASED ON ACTUAL BUILDING AND EQUIPMENT OPERATING WEIGHTS

B. LIVE LOADS:
ROOF: 20 PSF (REDUCIBLE)
FLOOR: 40 PSF (REDUCIBLE)
CORRIDOR: 100 PSF (REDUCIBLE)

5. SEISMIC DESIGN:

BASE SHEAR $V = 0.244\ W$ FOR BOTH DIRECTIONS

WHERE: R = 4.5 FOR LIGHT-FRAMED WALLS WITH SHEAR PANELS
C_A = 0.44 FOR SOIL PROFILE S_D
N_A = 0.64 12.7 KM FROM A TYPE B SEISMIC SOURCE
I = 1.0 FOR STANDARD OCCUPANCY FACILITIES

6. DESIGN TEAM

DAVID COCKE	PROJECT MANAGER
RUSSELL KEHL	PROJECT ENGINEER
CRAIG SWIFT	DESIGN ENGINEER
BEN HAYS	DESIGN ENGINEER

LA DBS — DEPARTMENT OF BUILDING AND SAFETY

Los Angeles Regional Uniform Code Program

Committee I-3: Structural Observation

LARUCP

STRUCTURAL OBSERVATION PROGRAM AND DESIGNATION OF THE STRUCTURAL OBSERVER

PROJECT ADDRESS: 18855 VICTORY BLVD., RESEDA, CA PERMIT APPL. NO.: 07010-20000-03330

Description of Work: 9-STORY SENIOR HOUSING OVER BASEMENT PARKING GARAGE

Owner: JEWISH HOME FOR THE AGING Architect: WWCOT Engineer: STRUCTURAL FOCUS

STRUCTURAL OBSERVATION
(only checked items are required)

Firm or Individual to be responsible for the Structural Observation:
Name: DAVID W. COCKE Phone: (510) 893-9924 Calif. Registration: S3005

FOUNDATION	WALL	FRAME	DIAPHRAGM
☑ Footing, ~~Stem Walls, Piers~~	☑ Concrete	☐ Steel Moment Frame	☐ Concrete
☐ Mat Foundation	☑ Masonry	☐ Steel Braced Frame	☑ Steel Deck
☑ ~~Caisson, Piles,~~ Grade Beams	☐ Wood	☐ Concrete Moment Frame	☐ Wood
☑ ~~Stepp-ly~~/Retain-ly Foundation, ~~Hillside Special Articles~~	☑ Others: Sureboard	☐ Masonry Wall Frame	☐ Others:
☐ Others:		☑ Others: GENERAL STEEL FRAMING	

DECLARATION BY OWNER

I, the Owner of the project, declare that the above listed firm or individual is hired **by me** to be the Structural Observer.

Signature Date

DECLARATION BY ARCHITECT OR ENGINEER OF RECORD (required if the Structural Observer is different from the Architect or Engineer of Record)

I, the Architect or Engineer of record for the project, declare that the above listed firm or individual is designated by me to be responsible for the Structural Observation.

Signature License No. Date

INFO-reg.68 (Part 2) (Rev. 6/1/2006) www.ladbs.org

WWCOT
Widom Wein Cohen O'Leary Terasawa

3130 Wilshire Boulevard
Sixth Floor
Santa Monica, California 90403
T (310) 828-0040
F (310) 453-9432
www.wwcot.com

Inland Empire
Palm Springs
Moorpark
Shanghai, China

STRUCTURAL FOCUS
1005 WEST 190TH STREET
GARDENA, CALIFORNIA 90248
TEL: 310.323.9924
FAX: 310.323.9925

REGISTERED PROFESSIONAL ENGINEER — DAVID W. COCKE — No. S3005 — Exp. 6/30/08 — STRUCTURAL — STATE OF CALIFORNIA

Building Department Submittal: June 1, 2007
Issued For Bid:
Issued For Construction: January 29, 2008

RECEIVED
10:56 am, Apr 21, 2008
FRAMEMAX

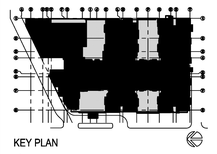

KEY PLAN

1 ____
2 ____
3 ____

Project:
Jewish Home for The Aging
FOUNTAINVIEW AT EISENBERG VILLAGE
6440 Wilbur Ave
Reseda, CA. 91335

JEWISH HOME
JEWISH HOME FOR THE AGING
18855 Victory Blvd.
Reseda, CA 91335
Project Number: 05097

GENERAL STRUCTURAL NOTES CONTINUED

Date: 1/29/2008
Drawn By: ENG Studios
Checked By: RK

S0.02
Sheet No.

© WWCOT 2006

SYMBOLS

REFERENCE SYMBOLS

DETAIL/SECTION

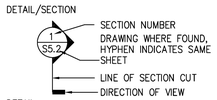

DETAIL

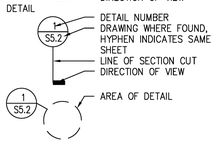

DETAIL PLAN OR ELEVATION

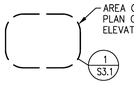

SINGLE ELEVATION

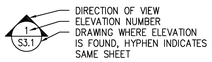

GRID LINES

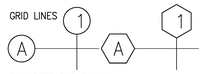

CONCRETE SHEAR WALL

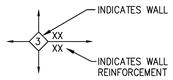

SUREBOARD SHEAR WALL

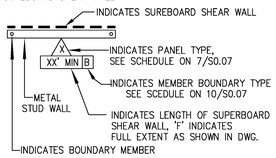

LEVEL LINE

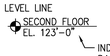

WORK POINT



REVISION



MATCH LINE

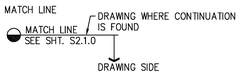

REFERENCE SYMBOLS cont'd

KEY NOTE

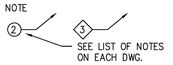

CENTER POINT OF CURVE

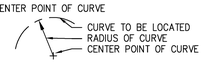

REFERENCED ELEVATION

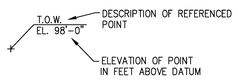

PLAN SYMBOLS

METAL DECK AND FILL

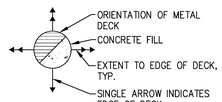

CONCRETE

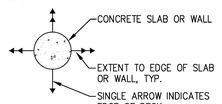

METAL DECK ORIENTATION

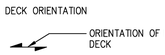

FLOOR DEPRESSIONS

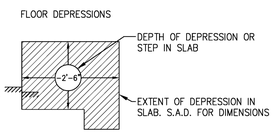

SLAB DEPRESSIONS

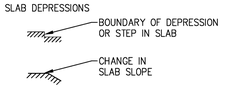

BEAM DESIGNATIONS

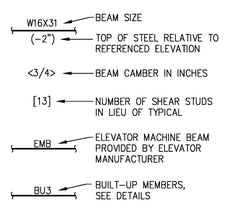

PLAN SYMBOLS cont'd

BEAM PENETRATIONS

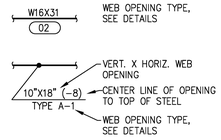

EMB REACTION

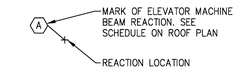

BEAM–COLUMN MOMENT CONNECTIONS



BEAM–COLUMN COLLECTOR/DRAG CONNECTIONS

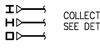

SHEAR CONNECTIONS



BEAM TO BEAM MOMENT CONNECTION

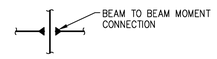

WELDED TUBE CONNECTIONS

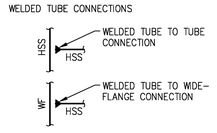

COLUMNS

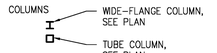

SLAB OR WALL OPENING

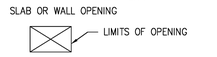

BRACED FRAME

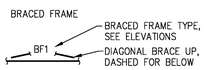

DIAGONAL BRACE

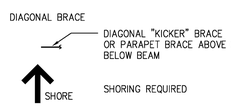

MATERIAL SYMBOLS

2 STANDARD SYMBOLS

SUREBOARD SHEAR WALL

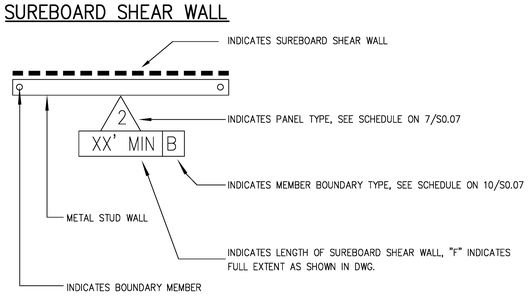

3 TYPICAL SUREBOARD WALL SYMBOL

ABBREVIATIONS

(E)	EXISTING
(N)	NEW
#	NUMBER
&	AND
@	AT
A.A.	ADHESIVE ANCHOR
A.B.	ANCHOR BOLT
ABV	ABOVE
ADD'L	ADDITIONAL
ADJ	ADJACENT
AGGR	AGGREGATE
AL	ALUMINUM
ALT	ALTERNATE
ANSI	AMERICAN NATIONAL STANDARDS INSTITUTE
APPROX	APPROXIMATE
ARCH	ARCHITECTURAL
ASTM	AMERICAN SOCIETY for TESTING and MATERIALS
A.C.	ASPHALT CONCRETE
AWG	AMERICAN WIRE GUAGE
BET	BETWEEN
BLDG	BUILDING
BLKG	BLOCKING
BM or BMS	BEAM or BEAMS
B.N.	BOUNDARY NAILING
B.O. FTG	BOTTOM OF FOOTING
BOT	BOTTOM
BP	BASE PLATE
BRG	BEARING
B.S.	BOTH SIDES
BSMT	BASEMENT
C	CHANNEL
CIP	CAST IN PLACE
C.J.	CONSTRUCTION JOINT
CL or ℄	CENTERLINE
CLG	CEILING
CLR	CLEAR
C.M.U.	CONCRETE MASONRY UNIT
COL	COLUMN
CONC	CONCRETE
CONN	CONNECTION
CONSTR	CONSTRUCTION
CONT	CONTINUOUS
CP	COMPLETE PENETRATION
CSK	COUNTERSINK
CTR	CENTER
d	PENNY (NAIL SIZE)
DBL	DOUBLE
DEMO	DEMOLITION
DET or DETS	DETAIL or DETAILS
DIAG	DIAGONAL
DIA or ø	DIAMETER
DIM or DIMS	DIMENSION or DIMENSIONS
DIST	DISTANCE
DK or DKG	DECK or DECKING
DN	DOWN
DO	DITTO
DWG or DWGS	DRAWING or DRAWINGS
DWL or DWLS	DOWEL or DOWELS
EA	EACH
E.F.	EACH FACE
E.J.	EXPANSION JOINT
EL	ELEVATION
ELEC	ELECTRICAL
ELEV	ELAVATOR
EMBED	EMBEDMENT
E.N.	EDGE NAILING
E.O.S.	EDGE OF SLAB
EQ	EQUAL
EQUIP	EQUIPMENT
E.S.	EACH SIDE
EV	EVERY
E.W.	EACH WAY
EXCAV	EXCAVATE or EXCAVATION
EXP	EXPANSION
EXT	EXTERIOR
FDN	FOUNDATION
F.F.	FAR FACE
FIN	FINISH
FLR or FLRS	FLOOR or FLOORS
F.N.	FIELD NAILING
F.O.	FACE OF
F.O. CONC	FACE OF CONCRETE
F.O. STUD	FACE OF STUDS
FPRF	FIREPROOFING
F.S.	FAR SIDE
FT	FOOT AND FEET
FTG or FTGS	FOOTING or FOOTINGS
GA	GAUGE
GALV	GALVANIZED
GL	GLASS or GLAZING
GLB	GLU–LAM BEAM
GRND	GROUND
GR	GRADE
GYP BD	GYPSUM BOARD
HD	HOLDOWN
H.D.G.	HOT DIPPED GALVANIZED
HDR	HEADER
HK or HKS	HOOK or HOOKS
HORIZ or (H)	HORIZONTAL
H.P.	HIGH POINT
H.S.B.	HIGH STRENGTH BOLTS
HSS	HOLLOW STRUCTURAL SECTION
HT	HEIGHT
I.D.	INSIDE DIAMETER
INFO	INFORMATION
JST or JSTS	JOIST or JOISTS
JT	JOINT
K.O.	KNOCK–OUT
L	ANGLE
ℓ_d	DEVELOPMENT LENGTH
ℓ_{dh}	HOOK DEVELOPMENT LENGTH
LEV	LEVEL
LLBB	LONG LEG BACK TO BACK
LLH	LONG LEG HORIZONTAL
LLV	LONG LEG VERTICAL
LOC	LOCATION
LONGIT	LONGITUDINAL
L.P.	LOW POINT
Ls	LAP SPLICE LENGTH
LSL	TIMBERSTRAND, LAMINATED STRAND LUMBER
LT	LIGHT
LVL	MICROLLAM, LAMINATED VENEER LUMBER
LWC	LIGHT WEIGHT CONCRETE
MAX	MAXIMUM
M.B.	MACHINE BOLT
MECH	MECHANICAL
M.E.P.	MECHANICAL, ELECTRICAL, PLUMBING
MEZZ	MEZZANINE
MFR	MANUFACTURER
MIN	MINIMUM
MISC	MISCELLANEOUS
MTD	MOUNTED
MTL	METAL
N	NORTH
N.F.	NEAR FACE
N.I.C.	NOT IN CONTRACT
NO. or #	NUMBER
NOM	NOMINAL DIAMETER
N.S.	NEAR SIDE
N.T.S.	NOT TO SCALE
NWC	NORMAL WEIGHT CONCRETE
O.C.	ON CENTER
O.D.	OUTSIDE DIAMETER (DIM)
O.H.	OPPOSITE HAND
OPNG	OPENING
OPP	OPPOSITE
OWSG	OPEN WEB STEEL GIRDER
OWSJ	OPEN WEB STEEL JOIST
PC or PCS	PIECE or PIECES
PERP	PERPENDICULAR
PL	PLATE
PLYWD	PLYWOOD
PP	PARTIAL PENETRATION
PR	PAIR
PRCST	PRE CAST
PSL	PARALLAM, PARALLEL STRAND LUMBER
PT	POINT
PTN	PARTITION
R or RAD	RADIUS
REBAR	REINFORCING BAR
REF	REFERENCE
REINF	REINFORCED or REINFORCING
REQ'D	REQUIRED
REV	REVISE OR REVISION
RFG	ROOFING
R.O.	ROUGH OPENING
RSJ	ROLLED STEEL JOIST
S.A.D.	SEE ARCH. DOCUMENTS
SCHED	SCHEDULE
SECT	SECTION
SHT	SHEET
SHTG	SHEATHING
SIM	SIMILAR
SL	SLOPE
S.M.S.	SHEET METAL SCREW
S.O.G.	SLAB ON GRADE
SPEC	SPECIFICATION or SPECIFICATIONS
SQ	SQUARE
S.S. or SST	STAINLESS STEEL
STAG	STAGGER or STAGGERED
STD	STANDARD
STIFF	STIFFENER
STIR	STIRRUP or STIRRUPS
STL	STEEL
STRUC	STRUCTURAL
SUBST	SUBSTITUTE
SUSP	SUSPENDED
SYM	SYMMETRICAL
T&B	TOP AND BOTTOM
T&G	TONGUE AND GROOVE
THK	THICK
THRD	THREADED
THRU	THROUGH
T.O.	TOP OF
T.O. B.P.	TOP OF BASE PLATE
T.O. CONC	TOP OF CONCRETE
T.O. STL	TOP OF STEEL
T.O. SLAB	TOP OF STRUCTURAL SLAB
TRANS	TRANSVERSE
TR	TREAD
TS	TUBE STEEL
TYP	TYPICAL
U.O.N.	UNLESS OTHERWISE NOTED
URM	UNREINFORCED MASONRY
VENT	VENTILATE
VERT or (V)	VERTICAL
V.I.F.	VERIFY IN FIELD
W/	WITH
W/O	WITHOUT
W or WF	WIDE FLANGE
WD	WOOD
WP	WORK POINT
WT	WEIGHT
WWM	WELDED WIRE MESH
X HVY	EXTRA HEAVY
XX HVY	DOUBLE EXTRA HVY.
X STR	EXTRA STRONG
XX STR	DOUBLE EXTRA STRONG

1 STANDARD ABBREVIATIONS

© WWCOT 2006

WWCOT
Widom Wein Cohen O'Leary Terasawa

3130 Wilshire Boulevard
Sixth Floor
Santa Monica, California 90403
T (310) 828-0040
F (310) 453-9432
www.wwcot.com

Inland Empire
Palm Springs
Moorpark
Shanghai, China

STRUCTURAL FOCUS
1005 WEST 190TH STREET
GARDENA, CALIFORNIA 90248
TEL: 310.323.9924
FAX: 310.323.9925

REGISTERED PROFESSIONAL ENGINEER
DAVID W. COCKERHAM
No. S3005
Exp. 6/30/08
STRUCTURAL
STATE OF CALIFORNIA

Building Department Submittal: June 1, 2007
Issued For Bid:
Issued For Construction: January 29, 2008

RECEIVED
10:56 am, Apr 21, 2008
FRAMEMAX

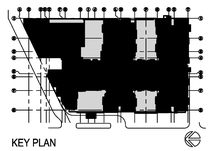

KEY PLAN

Project:
Jewish Home for The Aging
FOUNTAINVIEW AT EISENBERG VILLAGE
6440 Wilbur Ave
Reseda, CA. 91335

JEWISH HOME
JEWISH HOME FOR THE AGING
18855 Victory Blvd.
Reseda, CA 91335
Project Number: 05097

SYMBOLS AND ABBREVIATIONS

Date: 1/29/2008
Drawn By: ENG Studios
Checked By: RK

S0.03
Sheet No.

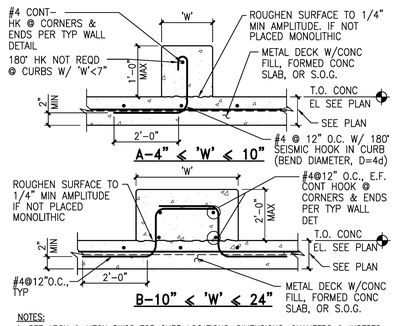

NOTES:
1. SEE ARCH & MECH DWGS FOR CURB LOCATIONS, DIMENSIONS, CHAMFERS & INSERTS.
2. COORDINATE REINF LOCATIONS TO AVOID INTERFERENCE WITH INSTALLATION OF EXPANSION ANCHORS IF USED.

17 CONCRETE CURBS
N.T.S.

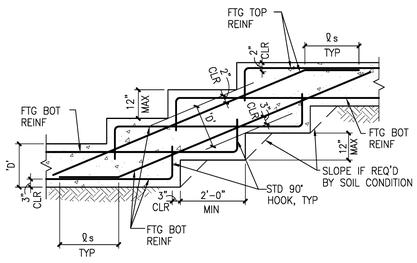

13 TYPICAL STEPPED FOOTING
N.T.S.

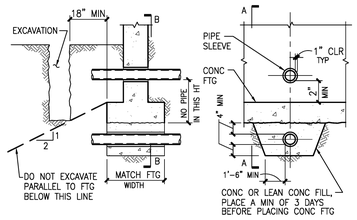

NOTES:
1. REINFORCE OPENINGS FOR SLEEVES OR GROUPS OF SLEEVES LARGER THAN 10" PER THE TYPICAL WALL OPENING DETAIL. "GROUPS" OF SLEEVES INCLUDES ALL SLEEVES SPACED CLOSER THAN ONE DIAMETER CLR.
2. SEE MECHANICAL AND CIVIL DRAWINGS FOR ADDITIONAL REQUIREMENTS AT SLEEVES.

9 PIPE SLEEVES THROUGH STRIP FOOTINGS
N.T.S.

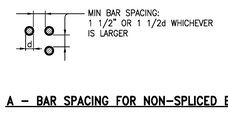

5 BAR SPACING
N.T.S.

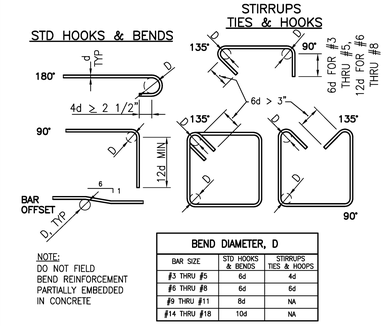

NOTE:
DO NOT FIELD BEND REINFORCEMENT PARTIALLY EMBEDDED IN CONCRETE

BEND DIAMETER, D		
BAR SIZE	STD HOOKS & BENDS	STIRRUPS TIES & HOOPS
#3 THRU #5	6d	4d
#6 THRU #8	6d	6d
#9 THRU #11	8d	NA
#14 THRU #18	10d	NA

1 HOOKS & BENDS
N.T.S.

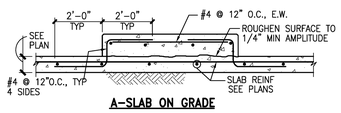

NOTES:
1. SEE DRAWINGS BY OTHERS FOR HEIGHT, SIZE, CHAMFERS, AND LOCATION OF CONCRETE PADS.
2. COORDINATE REINF LOCATIONS TO AVOID INTERFERENCE WITH INSTALLATION OF EXPANSION ANCHORS IF USED.
3. AT (E) CONC, USE #4 ADHESIVE DWLS @ 12" O.C.

18 HOUSEKEEPING PAD
N.T.S.

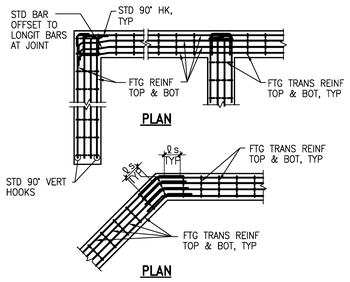

NOTE:
SEE TYPICAL WALL DETAIL FOR REINFORCING IN STEM WALL.

14 FOOTING REINFORCEMENT AT CORNERS AND INTERSECTIONS
N.T.S.

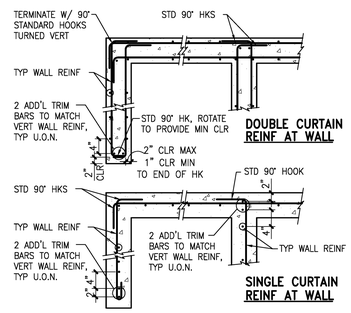

10 PLAN AT CURB AND WALL REINF AT CORNERS AND INTERSECTIONS
N.T.S.

CONCRETE REINFORCING DEVELOPMENT & SPLICE LENGTHS (INCHES)																																			
BAR LOCATION	CONCRETE		BAR SIZE																																	
	TYPE	STRENGTH	#3			#4			#5			#6			#7			#8			#9			#10			#11			#14			#18		
			Ad	As	Xdh	Ad	As	Xdh	Ad	As	Xdh	Ad	As	Xdh	Ad	As	Xdh	Ad	As	Xdh	Ad	As	Xdh	Ad	As	Xdh	Ad	As	Xdh	Ad	As	Xdh	Ad	As	Xdh
CONC WALL VERT REINF, COLUMNS, BEAM BOT REINF SLAB-ON-GRADE FOOTING BOT REINF	NWC	f'c ≥ 4ksi	15	19	8	19	25	10	24	31	12	29	37	15	42	54	17	48	62	19	54	70	22	61	79	25	67	87	27	81	–	33	108	–	43
CONC WALL HORIZ REINF, FTG TOP & SIDE REINF, BEAM TOP & SIDE REINF	NWC	f'c ≥ 4ksi	20	25	8	26	34	10	32	42	12	39	50	15	54	71	17	62	81	19	70	91	22	79	102	25	87	114	27	105	–	33	140	–	43

NOTES:
1. Xd = DEVELOPMENT LENGTH
Xs = LAP SPLICE LENGTH
Xdh = HOOK DEVELOPMENT LENGTH
2. WHEN SPLICING BARS OF DIFFERENT SIZE, USE LAP SPLICE LENGTH IF LARGER BAR, U.O.N.
3. STAGGER EA SPACE AS FOLLOWS:
ℓs 2'-0" CLR MIN ℓs
COUPLER OR WELDED SPLICE
2'-0" CLR MIN
4. MULTIPLY THE TABLE LENGTHS ABOVE BY 1.5 FOR EPOXY COATED REINF

6 REINFORCING DEVELOPMENT & SPLICE LENGTHS
N.T.S.

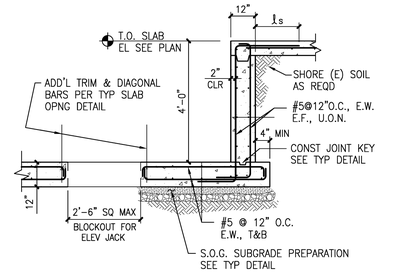

NOTES:
1. COORDINATE SIZE & LOCATION OF SLAB OPENING FOR ELEVATOR JACK & ALL INSERTS W/ ELEVATOR CONTRACTOR.
2. SEE ARCH DWGS FOR WATERPROOFING.

19 ELEVATOR PIT
N.T.S.

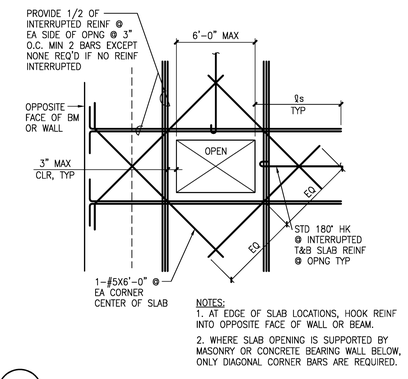

NOTES:
1. AT EDGE OF SLAB LOCATIONS, HOOK REINF INTO OPPOSITE FACE OF WALL OR BEAM.
2. WHERE SLAB OPENING IS SUPPORTED BY MASONRY OR CONCRETE BEARING WALL BELOW, ONLY DIAGONAL CORNER BARS ARE REQUIRED.

15 OPENINGS IN SUSPENDED SLAB
N.T.S.

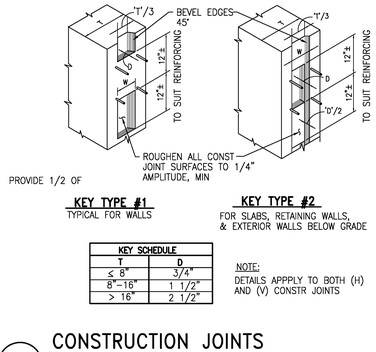

KEY SCHEDULE	
T	D
≤ 8"	3/4"
8"-16"	1 1/2"
> 16"	2 1/2"

NOTE:
DETAILS APPPLY TO BOTH (H) AND (V) CONSTR JOINTS

11 CONSTRUCTION JOINTS IN CONCRETE WALLS & SLABS
N.T.S.

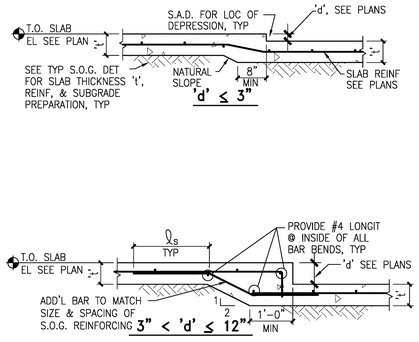

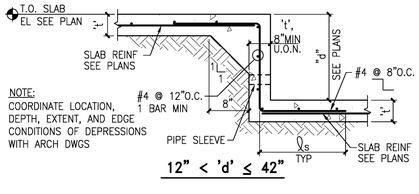

8 DEPRESSIONS IN SLAB ON GRADE
N.T.S.

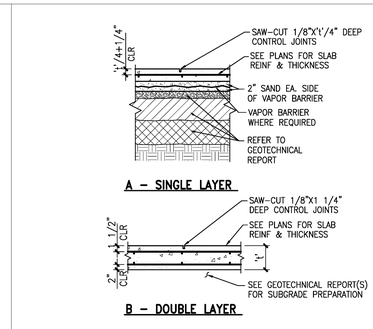

NOTE:
SEE GEOTECHNICAL REPORT(S) FOR SUBGRADE PREPARATION REQUIREMENTS.

3 SLAB ON GRADE, CONTROL JT & SUBGRADE PREPARATION
N.T.S.

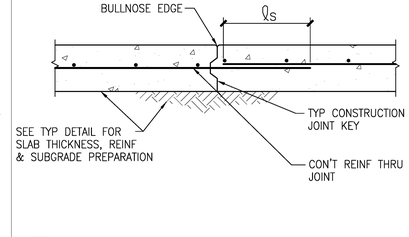

NOTE:
CONSTRUCTION JOINTS TO BE USED ONLY WHERE SHOWN ON PLAN OR SPECIFICALLY APPROVED BY THE OWNER'S REPRESENTATIVE.

4 CONSTRUCTION JOINTS AT SLAB ON GRADE
N.T.S.

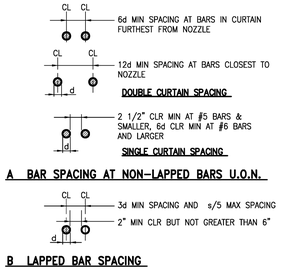

20 BAR SPACING IN SHOTCRETE
1"=1'-0"

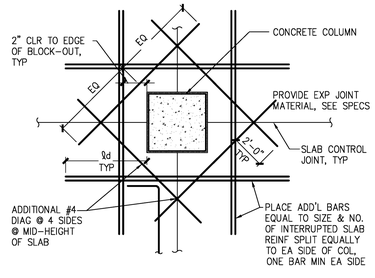

16 CONCRETE COLUMNS AT SLAB ON GRADE
N.T.S.

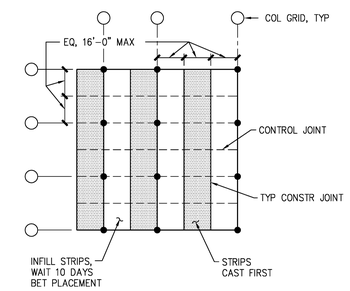

12 CONSTRUCTION JOINTS AT SLAB ON GRADE
N.T.S.

© WWCOT 2006

WWC OT
Widom Wein Cohen O'Leary Terasawa
3130 Wilshire Boulevard
Sixth Floor
Santa Monica, California 90403
T (310) 828-0040
F (310) 453-9432
www.wwcot.com
Inland Empire
Palm Springs
Moorpark
Shanghai, China

STRUCTURAL FOCUS
1005 West 190th Street
Gardena, California 90248
Tel: 310.323.9924
Fax: 310.323.9925

REGISTERED PROFESSIONAL ENGINEER DAVID W. COOLEY No. S3005 Exp. 6/30/08 STRUCTURAL STATE OF CALIFORNIA

Building Department Submittal: June 1, 2007
Issued For Bid:
Issued For Construction: January 29, 2008

RECEIVED 10:56 am, Apr 21, 2008 FRAMEMAX

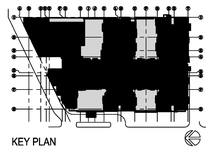

KEY PLAN

Project:
Jewish Home for The Aging
FOUNTAINVIEW AT EISENBERG VILLAGE
6440 Wilbur Ave
Reseda, CA. 91335
JEWISH HOME
JEWISH HOME FOR THE AGING
18855 Victory Blvd.
Reseda, CA 91335
Project Number: 05097

TYPICAL CONCRETE DETAILS

Date: 1/29/2008
Drawn By: ENG Studios
Checked By: RK

S0.04
Sheet No.

NOTES:
1. PREDRILL HOLES IN SHEAR ℄'S AS REQ'D
2. SEE 4/S0.05, SIM FOR INFO NOT SHOWN

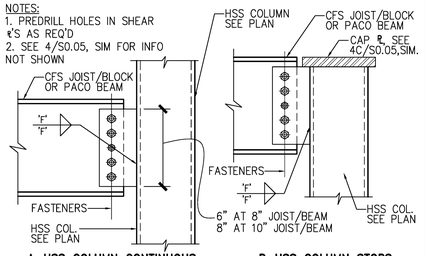

A-HSS COLUMN CONTINUOUS **B-HSS COLUMN STOPS**

BEAM CONNECTION SCHEDULE				
MEMBER	SHEAR PL THICKNESS ('t')	FASTENERS	WELD SIZE ('F')	REMARKS
CFS JOIST OR BLOCKING	3/16"	PER 20/S0.07	1/8"	
PACO JOIST/BEAM	1/4"	8-#12	3/16"	

17 PACO BM. OR CFS TO HSS COL.
N.T.S.

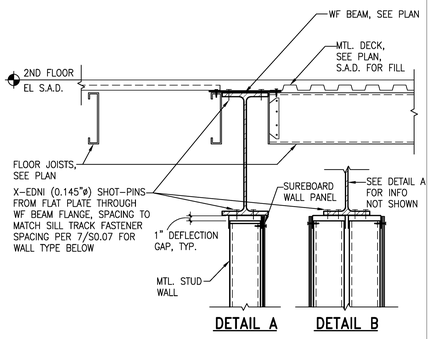

DETAIL A **DETAIL B**

18 WIDE FLANGE BEAM W/ SHEAR WALL BELOW
N.T.S.

PROVIDE 6'-0" OF FULL DEPTH BLOCKING E.S. OF HSS COLUMN WHERE WF BEAMS FRAME TO COLUMN IN ONLY 1 DIRECTION

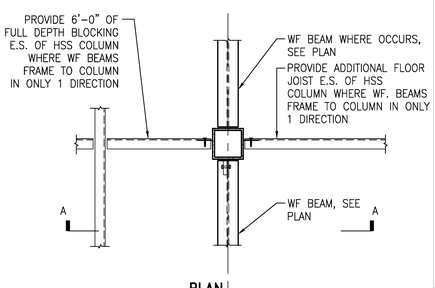

PLAN

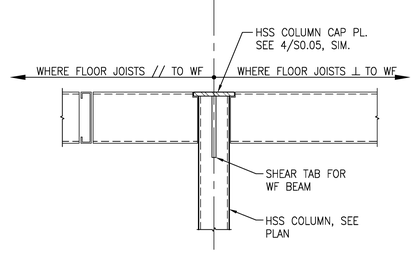

SECTION A-A

14 FLOOR FRAMING AT HSS COLUMN
N.T.S.

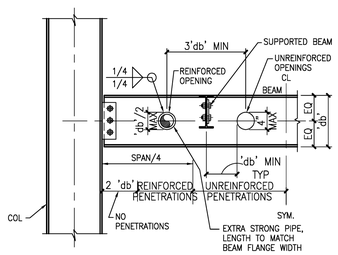

NOTES:
1. COORDINATE BEAM PENETRATION LOCATIONS WITH OTHER DICIPLINES.
2. SUBMIT BEAM PENETRATIONS NOT SPECIFICALLY LOCATED ON THE STRUCTURAL DRAWINGS FOR APPROVAL.

9 TYPICAL ROUND HOLE PENETRATION IN BEAM WEB
N.T.S.

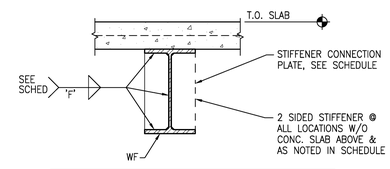

LOCATION	PL SIZE	WELD SIZE 'F'	# OF PL'S
W12 & SMALLER	1/4"	1/8"	1-SIDED
W18 & SMALLER	3/8"	3/16"	2-SIDED
W36 & SMALLER	1/2"	1/4"	2-SIDED
STAIR STRINGER CONNECTIONS	3/8"	3/16"	2-SIDED

NOTES:
1. USE THIS DETAIL WHERE PL'S OR STIFFENERS ARE SHOWN BUT NOT DETAILED.
2. WELD TO MAXIMUM OF A.W.S. MINIMUM AND SCHEDULE SIZE.
3. COORDINATE LOCATIONS OF PL'S WITH ARCH DRAWINGS.

10 STIFFENER CONNECTION PLATE
N.T.S.

NOTES:
1. MEMBER 'B' NOTED ○——| ON PLAN.
2. FOR WELD SIZE 'F', NUMBER OF BOLTS 'N', PL THICKNESS 't', SEE BOLTED BEAM CONNECTION SCHEDULE.

5 FULL DEPTH CONNECTION MEMBER "B" > W10
N.T.S.

BEAM CONNECTION SCHEDULE				
NOMINAL MEMBER DEPTH	SHEAR PL THICKNESS ('t')	FASTENERS A325-X U.O.N. ('N')	WELD SIZE ('F')	REMARKS
8", 10"	3/8"	2-7/8" ø	5/16"	
12", 14"	3/8"	3-7/8" ø	5/16"	
16"	1/2"	4-7/8" ø	3/8	
18"	1/2"	4-7/8" ø	3/8"	
18" ≥ 119 plf	7/8"	2 ROWS 4-1/8"ø A490-X	3/4"	
18" ≥60plf <119plf	5/8"	4-1 1/8"ø A490-X	1/2"	
21"	1/2"	5-7/8" ø	3/8"	
21"≥ 100plf	5/8"	5-1 1/8"ø A490-X	1/2"	
24"	1/2"	6-7/8" ø	3/8"	
24"≥ 100plf	5/8"	6-1 1/8"ø A490-X	1/2"	
27"	1/2"	7-7/8" ø	3/8"	
30"	1/2"	8-7/8" ø	3/8"	
33"	1/2"	9-7/8"ø	3/8"	

1. BOLT HOLES TO BE STANDARD HOLES 1/16" GREATER THAN BOLT DIAMETER. SHORT SLOTTED HOLES IN SHEAR PL MAY BE USED ONLY WHERE NOTED.
2. BOLTS TO BE FULLY PRETENSIONED A325-X WITH HARDENED WASHERS, U.O.N.
3. SCHEDULE BASED ON NOMINAL DEPTH OF WIDE FLANGE BEAMS, CHANNELS, TUBES & OTHER MISCELLANEOUS SHAPES.

1 BEAM CONN SCHEDULE
N.T.S.

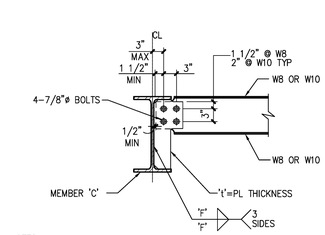

NOTES:
1. W8 OR W10 NOTED ○——| ON PLAN.
2. FOR WELD 'F' & PL THICKNESS 't', SEE BOLTED BEAM CONNECTION SCHEDULE.

6 W8 AND W10 FULL DEPTH CONNECTION
N.T.S.

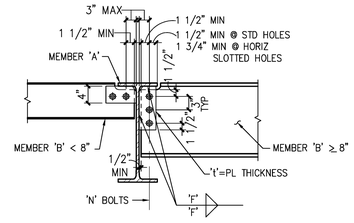

NOTES:
1. FOR WELD 'F', NUMBER OF BOLTS 'N' & PL THICKNESS 't', SEE BOLTED BEAM CONNECTION SCHEDULE.
2. SHORT SLOTTED HOLES IN SHEAR PL MAY BE USED.

2 BEAM TO BEAM CONNECTION MEMBER "A" > MEMBER "B"
N.T.S.

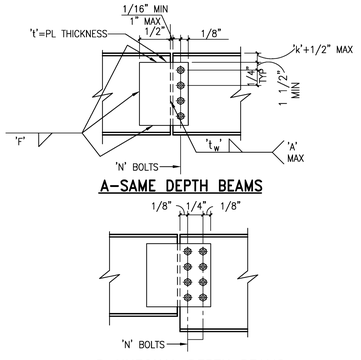

A-SAME DEPTH BEAMS

B-UNEQUAL DEPTH BEAMS

19 BOLTED BEAM SPLICE
N.T.S.

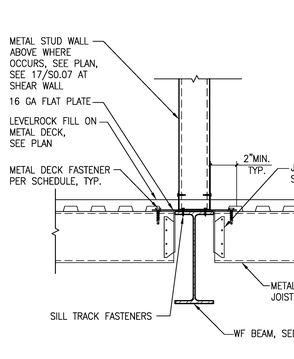

15 FLOOR JOISTS TO WF BEAM
N.T.S.

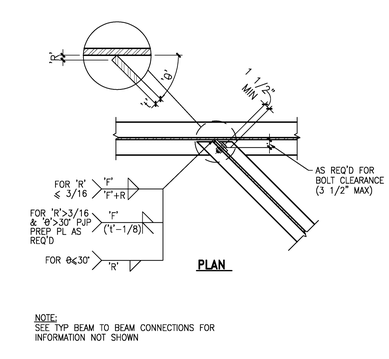

PLAN

NOTE:
SEE TYP BEAM TO BEAM CONNECTIONS FOR INFORMATION NOT SHOWN

11 SKEWED BEAM TO BEAM CONNECTION
N.T.S.

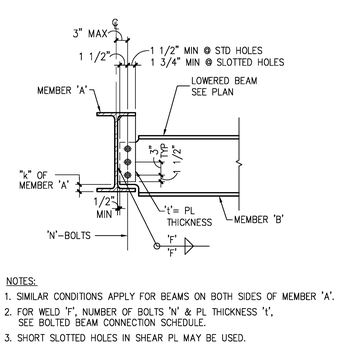

NOTES:
1. SIMILAR CONDITIONS APPLY FOR BEAMS ON BOTH SIDES OF MEMBER 'A'.
2. FOR WELD 'F', NUMBER OF BOLTS 'N' & PL THICKNESS 't', SEE BOLTED BEAM CONNECTION SCHEDULE.
3. SHORT SLOTTED HOLES IN SHEAR PL MAY BE USED.

7 BEAM TO BEAM CONNECTION AT LOWERED BEAM
N.T.S.

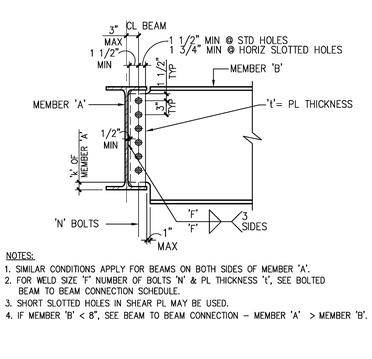

NOTES:
1. SIMILAR CONDITIONS APPLY FOR BEAMS ON BOTH SIDES OF MEMBER 'A'.
2. FOR WELD SIZE 'F' NUMBER OF BOLTS 'N' & PL THICKNESS 't', SEE BOLTED BEAM TO BEAM CONNECTION SCHEDULE.
3. SHORT SLOTTED HOLES IN SHEAR PL MAY BE USED.
4. IF MEMBER 'B' < 8", SEE BEAM TO BEAM CONNECTION – MEMBER 'A' > MEMBER 'B'.

3 BEAM TO BEAM CONNECTION MEMBER "A" ≤ MEMBER "B"
N.T.S.

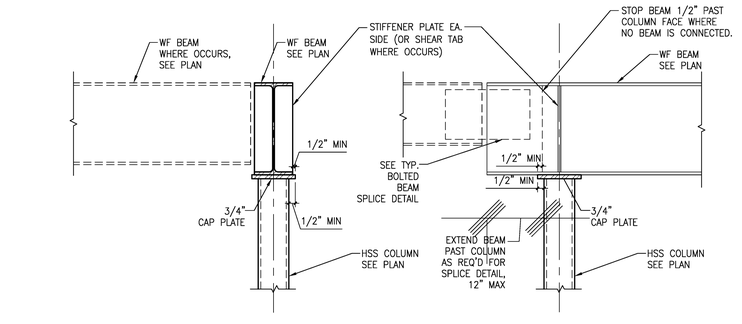

NOTES:
1) WHERE MULTIPLE WF BEAMS FRAME TO HSS COLUMN, DEEPEST BEAM SHALL SIT ON COLUMN, AND OTHER BEAMS SHALL CONNECT TO DEEP BEAM AS SHOWN.
2) WHERE 2 BEAMS ARE THE SAME DEPTH, HEAVIEST SECTION SHALL SIT ON COLUMN.

20 WF BEAM TO HSS COLUMN
N.T.S.

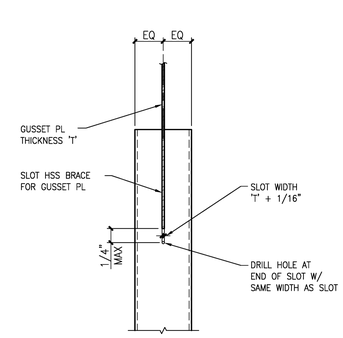

12 HSS SLOT DETAIL
N.T.S.

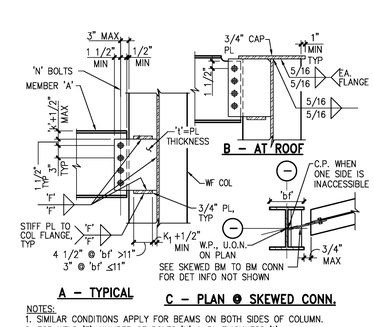

NOTES:
1. SIMILAR CONDITIONS APPLY FOR BEAMS ON BOTH SIDES OF COLUMN.
2. FOR WELD 'F', NUMBER OF BOLTS 'N' & PL THICKNESS 't', SEE BOLTED BEAM CONNECTION SCHEDULE.

8 WF TO WEAK-AXIS WF COLUMN CONNECTION
N.T.S.

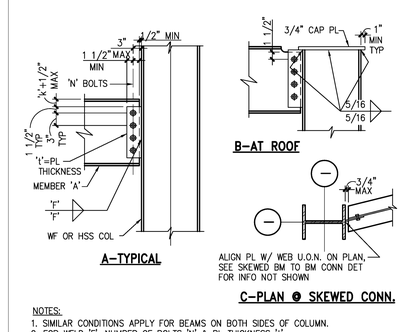

NOTES:
1. SIMILAR CONDITIONS APPLY FOR BEAMS ON BOTH SIDES OF COLUMN.
2. FOR WELD 'F', NUMBER OF BOLTS 'N' & PL THICKNESS 't', SEE BOLTED BEAM CONNECTION SCHEDULE.

4 WF TO STRONG-AXIS WF OR CONTINUOUS HSS COLUMN
N.T.S.

© WWCOT 2006

WWC OT
Widom Wein Cohen O'Leary Terasawa
3130 Wilshire Boulevard
Sixth Floor
Santa Monica, California 90403
T (310) 828-0040
F (310) 453-9432
www.wwcot.com
Inland Empire
Palm Springs
Moorpark
Shanghai, China

STRUCTURAL FOCUS
1005 WEST 190TH STREET
GARDENA, CALIFORNIA 90248
TEL: 310.323.9924
FAX: 310.323.9925
REGISTERED PROFESSIONAL ENGINEER DAVID W. COOLEY No. S3005 Exp. 6/30/08 STRUCTURAL STATE OF CALIFORNIA

Building Department Submittal: June 1, 2007
Issued For Bid:
Issued For Construction: January 29, 2008

RECEIVED 10:56 am, Apr 21, 2008 FRAMEMAX

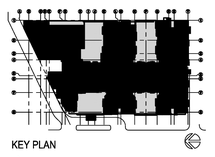

KEY PLAN

Project:
Jewish Home for The Aging
FOUNTAINVIEW AT EISENBERG VILLAGE
6440 Wilbur Ave
Reseda, CA. 91335

JEWISH HOME
JEWISH HOME FOR THE AGING
18855 Victory Blvd.
Reseda, CA 91335
Project Number: 05097

TYPICAL STEEL DETAILS

Date: 1/29/2008
Drawn By: ENG Studios
Checked By: RK

S0.05
Sheet No.

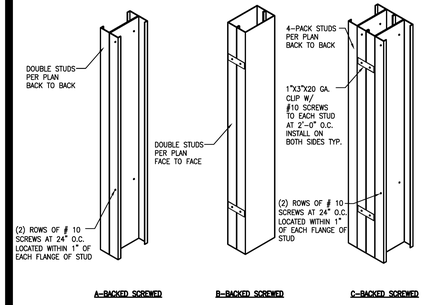

17 BUILT-UP POST CONDITIONS
N.T.S.

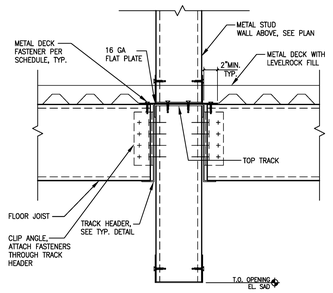

13 DOUBLE TRACK HEADER DETAIL
N.T.S.

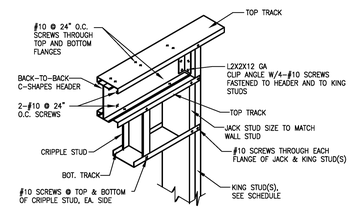

9 BACK TO BACK HEADER CONNECTION
N.T.S.

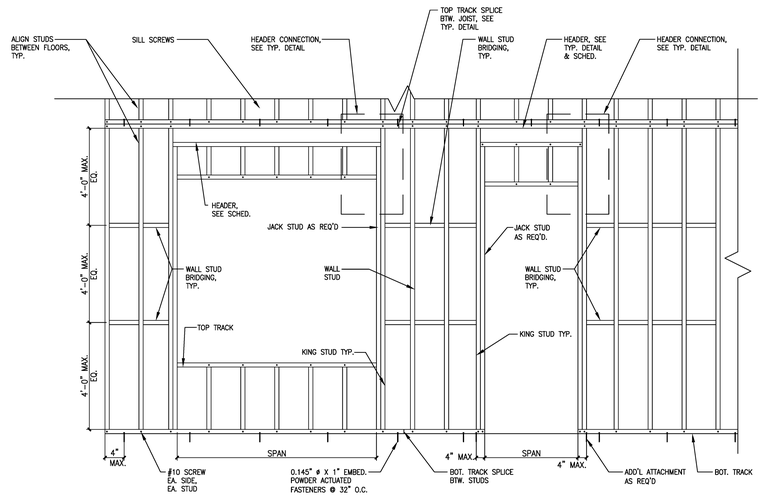

6 COLD FORMED STEEL STUD WALL FRAMING
N.T.S.

COLD FORMED STEEL KING STUD SCHEDULE					
	SSMA STUD SECTION (SPAN ≤ 8'-0")				
WALL TYPE	1ST FLOOR	2ND FLOOR	3RD FLOOR	4TH FLOOR	COMMENTS
W01	363S350p680	2-362S200-68	2-362S162-54	362S162-54	
W02	600S200-97	600S200-97	600S200-68	600S200-43	
W03	600S200-97	600S200-97	600S200-68	600S200-43	
W04	2-600S200-97	2-600S200-68	2-600S200-68	600S200-68	
W05	2-600S200-97	2-600S200-68	2-600S200-68	600S200-68	
W06	2-600S200-97	2-600S200-97	2-600S200-68	600S200-68	
W07	2-600S200-97	2-600S200-68	2-600S200-68	600S200-68	
W08	600S200-97	600S200-97	600S200-68	600S200-43	
W09	2-600S200-97	2-600S200-68	2-600S200-68	600S200-68	

ALTERNATES:
1) PACO 600t325p446 IS AN ACCEPTABLE ALTERNATE TO 600S200-97
2) PACO 600t400p968 IS AN ACCEPTABLE ALTERNATE TO 2-600S200-97
3) PACO 600t350p680 IS AN ACCEPTABLE ALTERNATE TO 2-600S200-68

COLD FORMED STEEL WALL HEADER SCHEDULE					
	SSMA TRACK SECTION (1 TRACK EACH FACE OF WALL UON)				
WALL TYPE	SPAN ≤ 3'-0"	SPAN ≤ 4'-0"	SPAN ≤ 6'-0"	SPAN ≤ 8'-0"	COMMENTS
W01	1000T125-54	1000T125-54	1000T125-68	1000T125-97	SEE NOTE 5
W02	1000T125-43	1000T125-54	1000T125-54	1000T125-68	
W03	1000T125-43	1000T125-54	1000T125-54	1000T125-68	
W04	1000T125-54	1000T125-54	1000T125-68	1000T125-97	
W05	1000T125-54	1000T125-54	1000T125-68	1000T125-97	
W06	1000T125-54	1000T125-68	1000T125-68	1000T150-97	
W07	1000T125-54	1000T125-68	1000T125-68	1000T150-97	
W08	1000T125-54	1000T125-54	1000T125-68	1000T125-97	
W09	1000T125-54	1000T125-68	1000T125-68	1000T150-97	

NOTE:
1) HEADERS ARE PER DETAIL 13/S0.06, U.O.N.
2) FOR HEADERS WITH BEARING WALLS ABOVE, SEE PLAN.
3) FOR HEADERS WITH SPANS GREATER THAN SHOWN IN TABLE, SEE PLAN.
4) FOR KING STUDS WITH HEADER SPANS GREATER THAN SHOWN IN TABLE, SEE PLAN
5) FOR DOUBLE WALL, 1 TRACK ON EACH WALL ON SIDE TO RECEIVE JOISTS

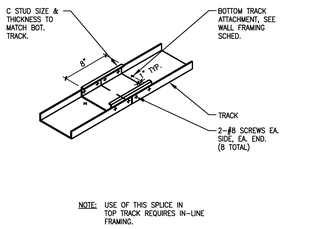

NOTE: USE OF THIS SPLICE IN TOP TRACK REQUIRES IN-LINE FRAMING.

18 TRACK SPLICE
N.T.S.

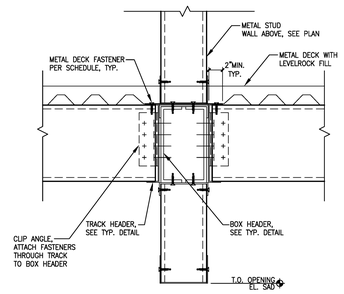

NOTE:
SEE TYPICAL DOUBLE TRACK HEADER DETAIL FOR INFORMATION NOT SHOWN.

14 HEADER DETAIL UNDER BEARING WALL
N.T.S.

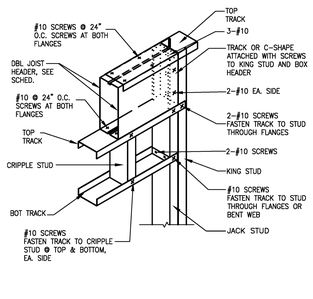

10 BOX HEADER CONNECTION
N.T.S.

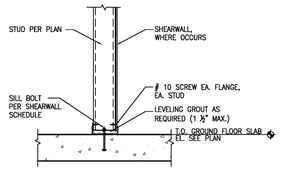

19 GROUND FLOOR WALL GROUT DETAIL
N.T.S.

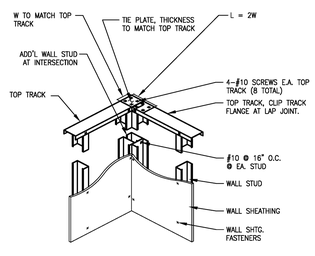

15 WALL FRAMING @ CORNER
N.T.S.

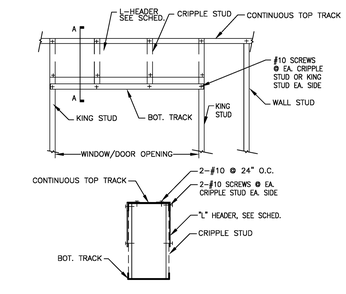

SECTION A-A

11 L-HEADER CONNECTION
N.T.S.

COLD FORMED STEEL WALL STUD SCHEDULE					
	SSMA STUD SECTION (SPACED @ 24" O.C. UON)				
WALL TYPE	1ST FLOOR S2.01B, S2.02B	2ND FLOOR S2.03B, S2.04	3RD FLOOR S2.05, S2.06	4TH FLOOR S2.07, S2.08	COMMENTS
W01	363t350p554	362S200-68	362S162-54	362S162-43	TYPICAL DOUBLE WALL, <16' TRIBUTARY
W02	363t350p554	362S200-68	362S162-54	362S162-43	INTERIOR WALL, <7' TRIBUTARY
W03	600S162-97	600S162-68	600S162-54	600S162-43	INTERIOR WALL, <11' TRIBUTARY
W04	600S162-97	600S162-68	600S162-54	600S162-43	INTERIOR WALL, <14' TRIBUTARY
W05	600S200-97	600S200-68	600S200-54	600S162-43	INTERIOR WALL, <17' TRIBUTARY
W06	600S200-97	600S200-97	600S200-54	600S162-43	INTERIOR WALL, <20' TRIBUTARY
W07	600t350p680	600S200-97	600S200-68	600S162-54	INTERIOR WALL, <24' TRIBUTARY
W08	600S162-68	600S162-54	600S162-54	600S162-43	EXTERIOR WALL, <8' TRIBUTARY
W09	600S200-97	600S162-68	600S162-54	600S162-43	EXTERIOR WALL, <12' TRIBUTARY
P01	362S162-33	362S162-33	362S162-33	362S162-33	TYPICAL PARTITION WALL

ALTERNATES:
1) PACO 600t325p446 IS AN ACCEPTABLE ALTERNATE TO 600S200-97

7 WALL STUD SCHEDULE
N.T.S.

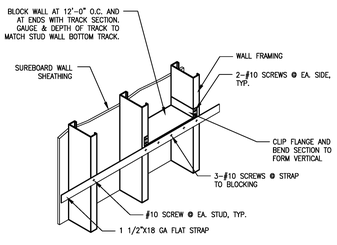

3 WALL STUD BRACING WITH SUREBOARD & STRAP
N.T.S.

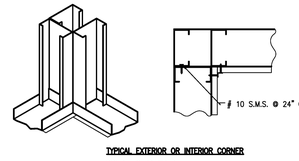

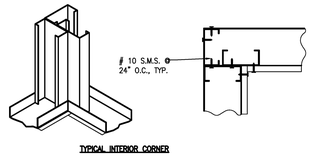

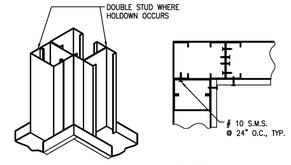

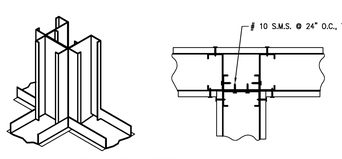

20 TYPICAL STUD WALL AT INTERSECTIONS DETAIL FOR BEARING WALLS
N.T.S.

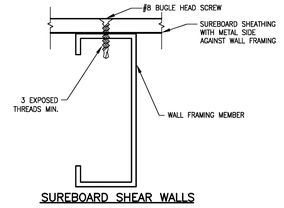

12 SCREW ATTACHMENT DETAIL
N.T.S.

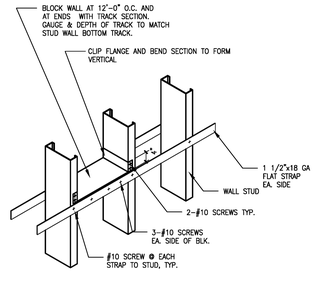

8 WALL BRACING WITH BLOCKING AND STRAPS
N.T.S.

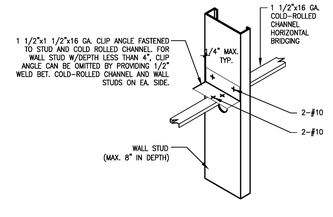

NOTE: PROVIDE BRIDGING BETWEEN LOAD BEARING STUDS AT 4' O.C. MAX.

4 WALL STUD BRIDGING
N.T.S.

© WWCOT 2006

WWCOT
Widom Wein Cohen O'Leary Terasawa
3130 Wilshire Boulevard
Sixth Floor
Santa Monica, California 90403
T (310) 828-0040
F (310) 453-9432
www.wwcot.com
Inland Empire
Palm Springs
Moorpark
Shanghai, China

STRUCTURAL FOCUS
1005 WEST 190TH STREET
GARDENA, CALIFORNIA 90248
TEL: 310.323.9924
FAX: 310.323.9925

REGISTERED PROFESSIONAL ENGINEER DAVID W. COCKERHAM No. S3005 Exp. 6/30/08 STRUCTURAL STATE OF CALIFORNIA

Building Department Submittal: June 1, 2007
Issued For Bid:
Issued For Construction: January 29, 2008

RECEIVED 10:56 am, Apr 21, 2008 FRAMEMAX

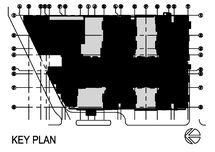

KEY PLAN

Project:
Jewish Home for The Aging
FOUNTAINVIEW AT EISENBERG VILLAGE
6440 Wilbur Ave
Reseda, CA. 91335

JEWISH HOME
JEWISH HOME FOR THE AGING
18855 Victory Blvd.
Reseda, CA 91335
Project Number: 05097

TYPICAL COLD FORMED STEEL DETAILS

Date: 1/29/2008
Drawn By: ENG Studios
Checked By: RK

S0.06
Sheet No.

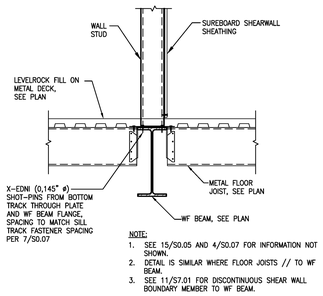

NOTE:
1. SEE 15/S0.05 AND 4/S0.07 FOR INFORMATION NOT SHOWN.
2. DETAIL IS SIMILAR WHERE FLOOR JOISTS // TO WF BEAM.
3. SEE 11/S7.01 FOR DISCONTINUOUS SHEAR WALL BOUNDARY MEMBER TO WF BEAM.

17 DISCONTINUOUS SHEARWALL TO WF BEAM
N.T.S.

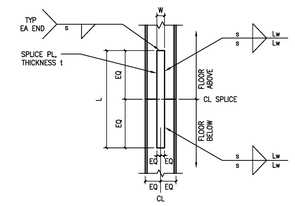

MARK	PLATE WIDTH W	PLATE LENGTH L	PLATE THICKNESS t	WELD SIZE s	WELD LENGTH Lw
A	4 1/2"	1'-6"	1/2"	3/16"	9"
B	4 1/2"	2'-3"	1/2"	3/16"	18"
C, H	6"	4'-0"	3/4"	3/16"	30"
D	4 1/2"	2'-3"	1/2"	3/16"	16"
E	6"	3'-3"	3/4"	3/16"	26"
F, J	8 1/2"	3'-3"	1"	1/4"	18"
G	8 1/2"	5'-0"	1"	1/4"	28"

13 SHEARWALL BOUNDARY SPLICE
N.T.S.

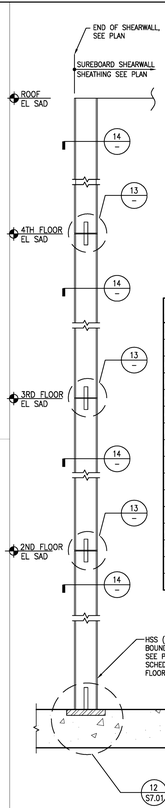

BUILT-UP BOUNDARY MEMBERS

BOUNDARY MEMBER TYPE	PACO CENTER MEMBER	PACO/CFS END MEMBERS	NOTES
A Ø6" WALL	1200\350p1062	(2)600S200-54	50 KSI, SEE 14B/–
A Ø7.5" WALL	1200\350p1062	(2)750\300p706	50 KSI, SEE 14A/–
B Ø6" WALL	1200\350p1062	(2)600S200-68	50 KSI, SEE 14B/–
B Ø7.5" WALL	1200\350p1062	(2)750\300p706	50 KSI, SEE 14A/–
C Ø6" WALL	1200\350p1062	(2)600\350p680	50 KSI, SEE 14A/–
C Ø7.5" WALL	1200\350p1062	(2)750\300p706	50 KSI, SEE 14A/–
D Ø6" WALL	1200\350p1062	(2)600S200-68	50 KSI, SEE 14B/–
D Ø7.5" WALL	1200\350p1062	(2)750\300p706	50 KSI, SEE 14A/–
E Ø6" WALL	1200\350p1062	(2)600\350p680	50 KSI, SEE 14A/–
E Ø7.5" WALL	1200\350p1062	(2)750\300p706	50 KSI, SEE 14A/–
F Ø6" WALL	1200\350p1420	(2)600\350p968	50 KSI, SEE 14A/–
F Ø7.5" WALL	1200\350p1420	(2)750\400p1268	50 KSI, SEE 14A/–
G Ø6" WALL	1200\400p1504	(2)600\500p1309	50 KSI, SEE 14A/–
G Ø7.5" WALL	1200\350p1420	(2)750\400p1268	50 KSI, SEE 14A/–
H Ø 6" WALL	1200\350p1062	(2)600\350p680	50 KSI, SEE NOTE 1 & 14A/–
J Ø 6" WALL	1200\350p1420	(2)600\500p1241	50 KSI, SEE NOTE 1 & 14A/–

NOTES:
1. PROVIDE 6" DIA HOLE AT CENTERLINE OF PACO CENTER MEMBER FOR DRYER VENT; COORDINATE LOCATION WITH ARCH. DWGS

10 SHEARWALL BOUNDARY MEMBER
N.T.S.

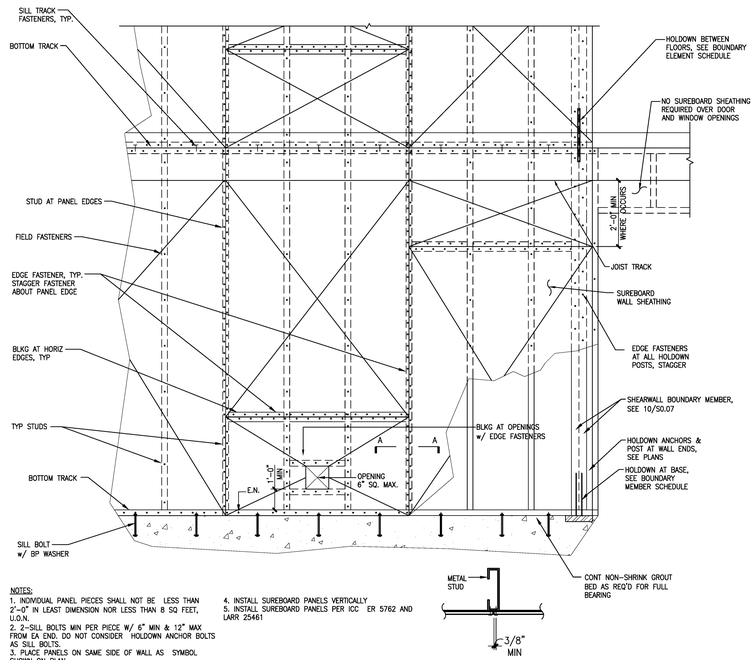

NOTES:
1. INDIVIDUAL PANEL PIECES SHALL NOT BE LESS THAN 2'-0" IN LEAST DIMENSION NOR LESS THAN 8 SQ FEET, U.O.N.
2. 2-SILL BOLTS MIN PER PIECE W/ 6" MIN & 12" MAX. FROM EA END. DO NOT CONSIDER HOLDOWN ANCHOR BOLTS AS SILL BOLTS.
3. PLACE PANELS ON SAME SIDE OF WALL AS SYMBOL SHOWN ON PLAN.
4. INSTALL SUREBOARD PANELS VERTICALLY
5. INSTALL SUREBOARD PANELS PER ICC ER 5762 AND LARR 25461

SECTION A–A
N.T.S.

SHEAR PANEL SCHEDULE

PANEL TYPE	SHEATHING	EDGE FASTENERS	FIELD FASTENERS	SILL BOLT	STUDS, TRACKS, AND HORIZ BLKG AT PANEL EDGES	TYP STUDS	SILL TRACK SCREWS	SHEAR TRANSFER SCREWS	ALLOWABLE SHEAR (ASD)	COMMENTS
1	SUREBOARD SERIES 200	#8 BUGLE HEAD @ 6" O.C.	#8 BUGLE HEAD @ 12" O.C.	N/A	20 GA. MIN.	SEE PLAN AND SCHEDULE, 350S162-33 MIN. @ 24" O.C. MAX.	2-#10 @ 12" O.C.	#10 @ 6" O.C.	434 #/FT	
2	SUREBOARD SERIES 200	#8 BUGLE HEAD @ 6" O.C.	#8 BUGLE HEAD @ 12" O.C.	N/A	18 GA. MIN.	SEE PLAN AND SCHEDULE, 350S162-43 MIN. @ 24" O.C. MAX.	2-#10 @ 12" O.C.	#10 @ 6" O.C.	562 #/FT	
3	SUREBOARD SERIES 200	#8 BUGLE HEAD @ 4" O.C.	#8 BUGLE HEAD @ 12" O.C.	N/A	20 GA. MIN.	SEE PLAN AND SCHEDULE, 350S162-33 MIN. @ 24" O.C. MAX.	2-#10 @ 8" O.C.	#10 @ 4" O.C.	618 #/FT	
4	SUREBOARD SERIES 200	#8 BUGLE HEAD @ 4" O.C.	#8 BUGLE HEAD @ 12" O.C.	N/A	18 GA. MIN.	SEE PLAN AND SCHEDULE, 350S162-43 MIN. @ 24" O.C. MAX.	2-#10 @ 8" O.C.	#10 @ 4" O.C.	770 #/FT	
5	SUREBOARD SERIES 200	#8 BUGLE HEAD @ 3" O.C.	#8 BUGLE HEAD @ 12" O.C.	N/A	20 GA. MIN.	SEE PLAN AND SCHEDULE, 350S162-33 MIN. @ 24" O.C. MAX.	2-#10 @ 6" O.C.	#10 @ 3" O.C.	692 #/FT	
6	SUREBOARD SERIES 200	#8 BUGLE HEAD @ 3" O.C.	#8 BUGLE HEAD @ 12" O.C.	N/A	18 GA. MIN.	SEE PLAN AND SCHEDULE, 350S162-43 MIN. @ 24" O.C. MAX.	2-#10 @ 6" O.C.	#10 @ 3" O.C.	858 #/FT	
7	SUREBOARD SERIES 200	#8 BUGLE HEAD @ 3" O.C.	#8 BUGLE HEAD @ 12" O.C.	N/A	16 GA. MIN.	SEE PLAN AND SCHEDULE, 350S162-54 MIN. @ 24" O.C. MAX.	2-#10 @ 6" O.C.	#10 @ 3" O.C.	1158 #/FT	
8	SUREBOARD SERIES 200	#8 BUGLE HEAD @ 2" O.C.	#8 BUGLE HEAD @ 12" O.C.	N/A	20 GA. MIN.	SEE PLAN AND SCHEDULE, 350S162-33 MIN. @ 24" O.C. MAX.	2-#10 @ 4" O.C.	#10 @ 2" O.C.	766 #/FT	
9	SUREBOARD SERIES 200	#8 BUGLE HEAD @ 2" O.C.	#8 BUGLE HEAD @ 12" O.C.	N/A	18 GA. MIN.	SEE PLAN AND SCHEDULE, 350S162-43 MIN. @ 24" O.C. MAX.	2-#10 @ 4" O.C.	#10 @ 2" O.C.	944 #/FT	
10	SUREBOARD SERIES 200	#8 BUGLE HEAD @ 2" O.C.	#8 BUGLE HEAD @ 12" O.C.	½"ø x 2½" MIN EMBED, EXP.ANCH @ 12" O.C. MAX.	16 GA. MIN.	SEE PLAN AND SCHEDULE, 350S162-54 MIN. @ 24" O.C. MAX.	2-#10 @ 4" O.C.	#10 @ 2" O.C.	1384 #/FT	

7 SUREBOARD SHEARWALL FRAMING–CFS FLOOR FRAMING
N.T.S.

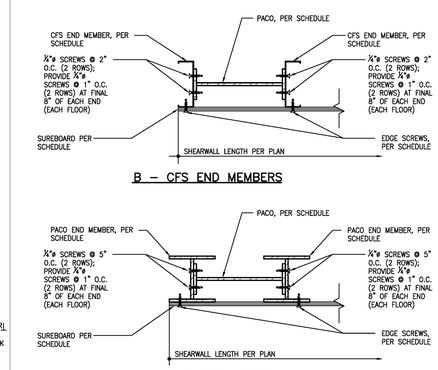

B – CFS END MEMBERS

A – PACO END MEMBERS

14 SHEARWALL BOUNDARY DETAIL
N.T.S.

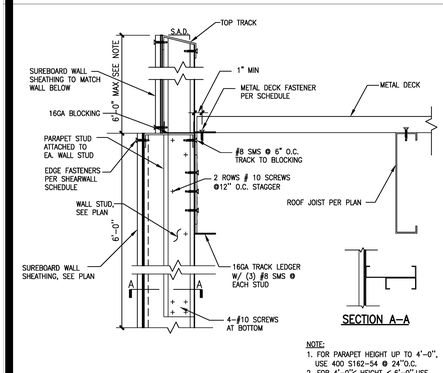

SECTION A–A

NOTE:
1. FOR PARAPET HEIGHT UP TO 4'-0", USE 400 S162-54 @ 24"O.C.
2. FOR 4'-0"< HEIGHT ≤ 6'-0" USE 400 S162-68 @ 24"O.C.
3. FOR 6'-0"< HEIGHT ≤ 8'-0", USE 600 S162-68 @ 24" O.C.

19 EXTERIOR WALL CANTILEVER PARAPET CONDITION
N.T.S.

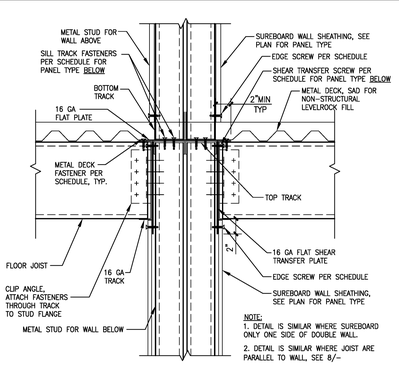

NOTES:
1. DETAIL IS SIMILAR AT ROOF. SEE TYP. DETAILS FOR METAL DECK CONN. OVER WALL. SEE PLAN FOR METAL DECK AT ROOF.
2. DETAIL IS SIMILAR WHERE SHEAR WALL ONLY OCCURS BELOW METAL DECK.

8 SUREBOARD SHEARWALL PARALLEL TO FLOOR JOISTS
N.T.S.

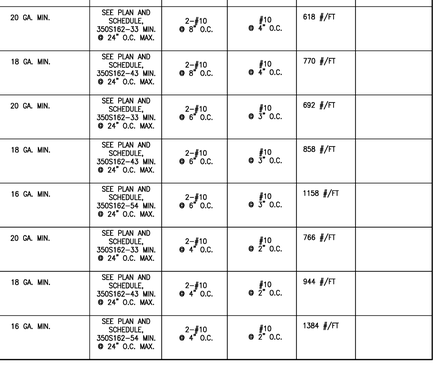

NOTES:
1. DETAIL IS SIMILAR AT ROOF. SEE TYP. DETAILS FOR METAL DECK CONN. OVER WALL. SEE PLAN FOR METAL DECK AT ROOF.
2. DETAIL IS SIMILAR WHERE SHEAR WALL ONLY OCCURS BELOW METAL DECK.

4 SUREBOARD SHEARWALL PERPENDICULAR TO FLOOR JOISTS
N.T.S.

COLD FORMED STEEL FLOOR / ROOF JOIST SCHEDULE				
	COLD-FORMED STEEL JOIST SECTION (SPACED @ 24" O.C. UON)			
JOIST TYPE	SURE-SPAN	TRADE-READY	FRAMEMAX / PACO	MAXIMUM SPAN
J1			FM 1000S200-68	15'-0", 10'-0" AT CORRIDOR
J2			FM 1000S200-97	17'-0", 12'-0" AT CORRIDOR
J3			2-FM 1000S200-68	19'-0", 13'-6" AT CORRIDOR
J4			2-FM 1000S200-97	22'-0", 15'-0" AT CORRIDOR
J5			2-FM 1000S200-97	25'-0", 17'-0" AT CORRIDOR
J6			FM 1000S200-54	10'-0" AT CORRIDOR
J7			FM 800S162-43	8'-0" MAX SPAN AT BALCONY
J8			PACO 1000\300p759	18'-0" AT CORRIDOR
J9			PACO 800\300p639	

COLD FORMED STEEL JOIST CONNECTION SCHEDULE			ALTERNATE SIMPSON HANGARS		
JOIST TYPE	CLIP ANGLE	SCREWS	STRAIGHT	SKEWED	WELDED
J1, J2, J6	L2 1/2 X2 1/2 X 16 GA X 9" LONG	5-#10 EACH LEG	S/JCT (MAX)	S/HJCT (MAX)	FOR J1 ONLY
J3	L2 1/2 X2 1/2 X 16 GA X 9" LONG	6-#10 EACH LEG	S/JCT (MAX)	N/A	N/A
J4, J5	L2 1/2 X2 1/2 X 16 GA X 9" LONG	8-#10 EACH LEG	S/HJCT (MAX)	N/A	N/A
J7	L2 1/2 X2 1/2 X 16 GA X 7" LONG	4-#10 EACH LEG	S/JCT (MAX)	S/HJCT (MAX)	
J8	L2 1/2 X2 1/2 X 14 GA X 9" LONG	8-#12 EACH LEG	N/A	N/A	
J9	SEE 17/S0.05				

NOTES:
1. SUPPORTING MEMBER THICKNESS (GA) SHALL BE EQUAL TO OR GREATER THAN CLIP ANGLE.
2. SURE-SPAN AND TRADE-READY JOIST DO NOT HAVE CITY OF L.A. RESEARCH REPORTS AND ARE NOT APPROVED FOR THIS PROJECT.

20 JOIST SCHEDULE
N.T.S.

NOTES:
1. DETAIL IS SIMILAR AT ROOF. SEE TYP. DETAILS FOR METAL DECK CONN. OVER WALL. SEE PLAN FOR METAL DECK AT ROOF.
2. DETAIL IS SIMILAR WHERE SHEAR WALL ONLY OCCURS BELOW METAL DECK.

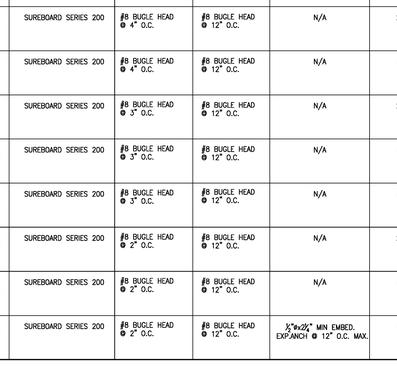

15 DOUBLE BEARING/SHEAR WALL
N.T.S.

NOTES:
1. DETAIL IS SIMILAR AT ROOF. SEE TYP. DETAILS FOR METAL DECK CONN. OVER WALL. SEE PLAN FOR METAL DECK AT ROOF.
2. DETAIL IS SIMILAR WHERE SHEAR WALL ONLY OCCURS BELOW METAL DECK.

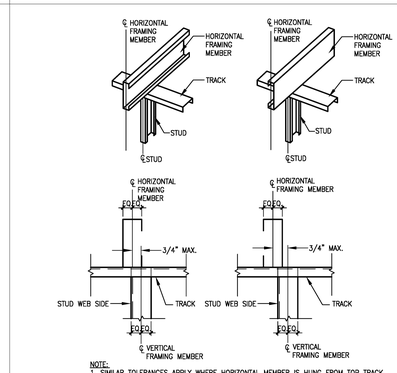

NOTE:
1. SIMILAR TOLERANCES APPLY WHERE HORIZONTAL MEMBER IS HUNG FROM TOP TRACK.
2. NOT REQUIRED WHERE CONTINUOUS TRACK IS USED TO SUPPORT JOISTS (SEE 4/S0.07).

11 IN–LINE FRAMING DETAIL–BEARING CONN.
N.T.S.

16 JOIST AND STUD WEB OPENINGS PATCH
N.T.S.

12 JOIST AND STUD WEB OPENING
N.T.S.

WWCOT
Widom Wein Cohen O'Leary Terasawa
3130 Wilshire Boulevard
Sixth Floor
Santa Monica, California 90403
T (310) 828-0040
F (310) 453-9432
www.wwcot.com
Inland Empire
Palm Springs
Moorpark
Shanghai, China

STRUCTURAL FOCUS
1005 WEST 190TH STREET
GARDENA, CALIFORNIA 90248
TEL: 310.323.9924
FAX: 310.323.9925
REGISTERED PROFESSIONAL ENGINEER DAVID W. COOPER No. S3005 Exp. 6/30/08 STRUCTURAL STATE OF CALIFORNIA

Building Department Submittal: June 1, 2007
Issued For Bid:
Issued For Construction: January 29, 2008

RECEIVED 10:56 am, Apr 21, 2008 FRAMEMAX

Project:
Jewish Home for The Aging
FOUNTAINVIEW AT EISENBERG VILLAGE
6440 Wilbur Ave
Reseda, CA. 91335
JEWISH HOME
JEWISH HOME FOR THE AGING
18855 Victory Blvd.
Reseda, CA 91335
Project Number: 05097

TYPICAL COLD FORMED STEEL DETAILS

Date: 1/29/2008
Drawn By: ENG Studios
Checked By: RK

S0.07
Sheet No.

© WWCOT 2006

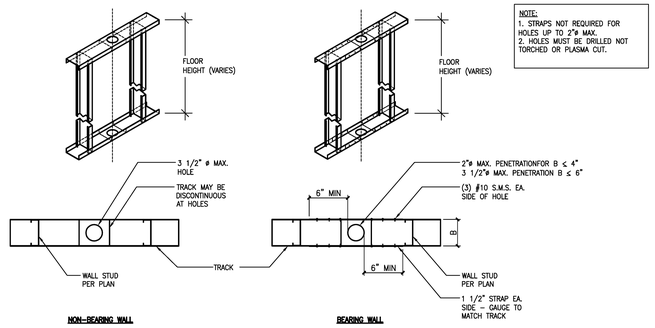

17 TRACK PENETRATION DETAIL
N.T.S.

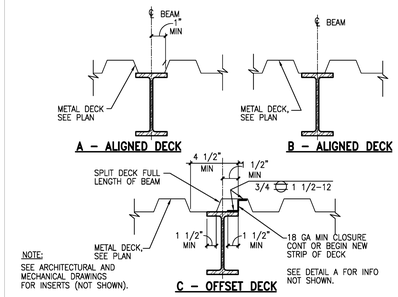

9 METAL DECK AT BEAM
N.T.S.

DECK TYPE	DECK PROFILE	HEIGHT	GAUGE	FACTORY VENTED	MINIMUM SECTION PROPERTIES (IN⁴)	+S (IN³)	-S (IN³)	FILL TYPE	FILL THICKNESS ABOVE TOP FLUTE	SHEAR STUD SIZE	SLAB REINFORCING	REMARKS
B/SIA	DEEP VERCOR	1 5/16"	20	NO	0.098	0.136	0.140	LEVELROCK SEE NOTE 8	S.A.D., 1" MAX	N/A	REFER TO LEVELROCK SPECIFICATIONS	SECOND, THIRD, AND FOURTH FLOOR
S2	DEEP VERCOR	1 5/16"	20	NO	0.098	0.136	0.140	N/A	N/A	N/A	N/A	ROOF

NOTES:
1. WHENEVER POSSIBLE DECK LAYOUTS SHALL PROVIDE SHEETS OF SUFFICIENT LENGTH TO SPAN CONTINUOUSLY ACROSS AT LEAST THREE SPANS. ENDS SHALL TERMINATE OVER A SUPPORT PERPENDICULAR TO THE DECK SPAN, EXCEPT AT OPENINGS OR BUILDING EDGES WHERE DECKS MAY BE CANTILEVERED.
2. SHORE DECK AS REQUIRED BY MANUFACTURER.
3. PROVIDE A MINIMUM OF 2" BEARING AT SUPPORTING MEMBERS PERPENDICULAR TO DECK SPAN AND 1 1/2" AT MEMBERS PARALLEL TO THE DECK.
4. CONCRETE FILL THICKNESS SHOWN ON FRAMING PLANS AND DETAIL SHEETS ARE MINIMUM THICKNESS. PROVIDE ADDITIONAL CONCRETE FILL AS REQUIRED TO COMPENSATE FOR BEAM OR DECK DEFLECTIONS AND TO MAINTAIN SURFACE TOLERANCES SPECIFIED.
5. SEE DETAIL TITLED "METAL DECK CONNECTIONS" FOR CONNECTION INFORMATION.
6. SEE PLAN FOR SHEAR STUD LOCATIONS.
7. USE VERCO METAL DECK PER ICC REPORT ER-2078P/LARR 23789 OR APPROVED EQUAL.
8. LEVELROCK CSD FLOOR UNDERLAYMENT, REFER TO ARCHITECTURAL DRAWINGS AND SPECIFICATIONS FOR MORE INFORMATION.

5 METAL DECK SCHEDULE
N.T.S.

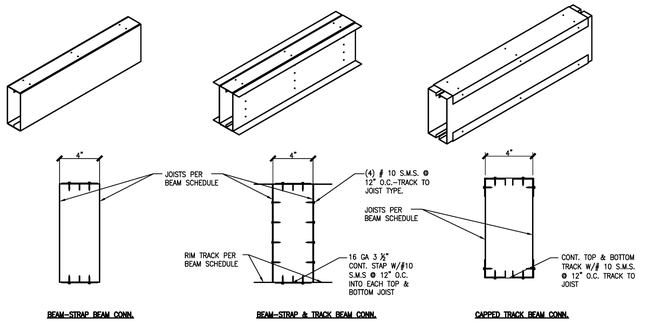

18 BOX BEAMS
N.T.S.

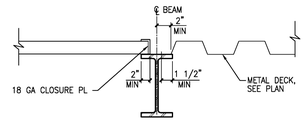

10 METAL DECK TRANSITION
N.T.S.

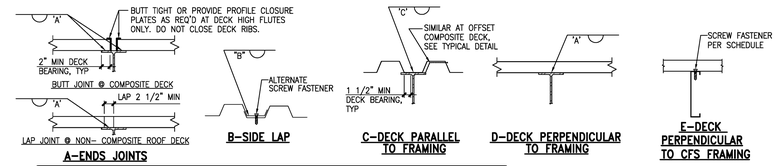

WELD SCHEDULE						
DECK TYPE	'A'	'B' SIDELAP WELD	'B' ALTERNATE SCREW FASTENERS	'C'	'E'	REMARKS
S1	3/8"ø @ 24"O.C.	3/8" @ 24"O.C.	#12" TEK @ 5"O.C.	3/8"ø @ 24"O.C.	#12" TEK @ 36/7 PATTERN	
S1A	3/8"ø @ 24"O.C.	3/8" @ 24"O.C.	#12" TEK @ 4"O.C.	3/8"ø @ 24"O.C.	#12" TEK @ 36/9 PATTERN	
S2	3/8"ø @ 24"O.C.	3/8" @ 24"O.C.	#12" TEK @ 5"O.C.	3/8"ø @ 24"O.C.	#12" TEK @ 36/7 PATTERN	

NOTES:
1 DIAMETER OF PUDDLE WELD REPRESENTS EFFECTIVE FUSION AREA
2 SEE SPECIFICATIONS FOR ALTERNATE DECK FASTENING METHODS
3 FOR SCREW FASTENERS, USE ITW BUILDEX TEKS PER ICC ER–3056/ LARR 24029

6 METAL DECK CONNECTIONS
N.T.S.

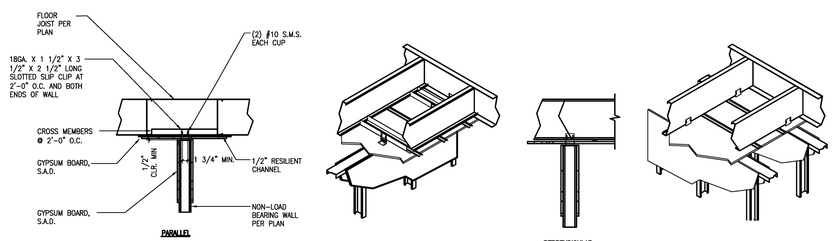

19 NON – LOAD BEARING WALL CONNECTION AT PARALLEL & PERPENDICULAR CONDITION
N.T.S.

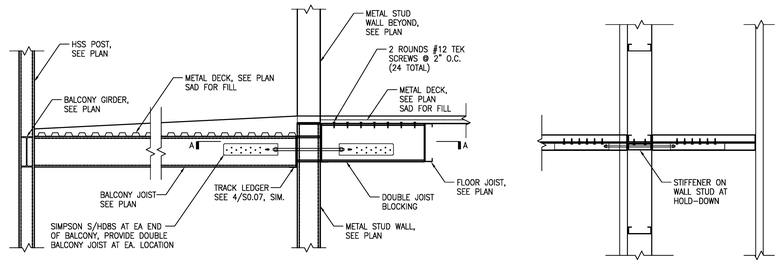

11 SECTION AT BALCONY
N.T.S.

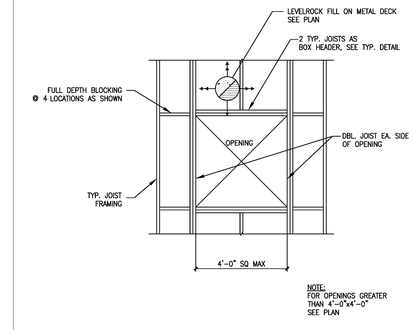

3 TYPICAL OPENING IN COLD FORMED STEEL JOIST FLOOR
N.T.S.

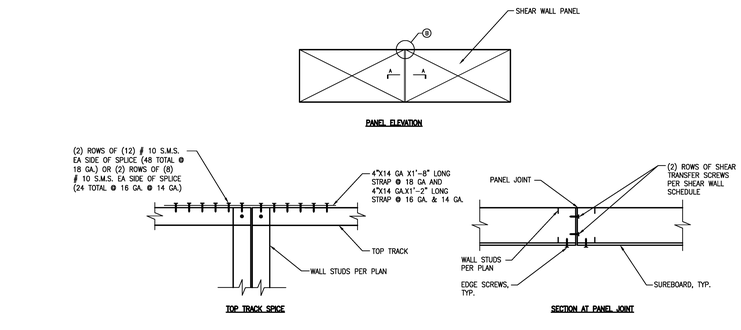

20 TYPICAL SHEAR WALL PANEL TO SHEAR WALL CONNECTION
N.T.S.

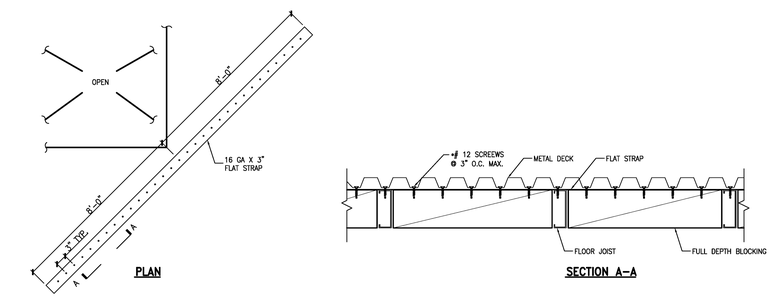

12 DIAPHRAGM AT BUILDING RE–ENTRANT CORNERS
N.T.S.

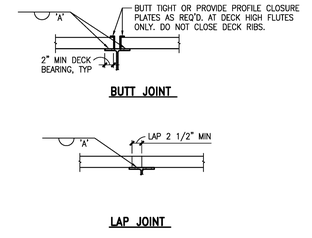

4 METAL DECK END JOINT CONNECTIONS
N.T.S.

WWC OT
Widom Wein Cohen O'Leary Terasawa
3130 Wilshire Boulevard
Sixth Floor
Santa Monica, California 90403
T (310) 828-0040
F (310) 453-9432
www.wwcot.com
Inland Empire
Palm Springs
Moorpark
Shanghai, China

STRUCTURAL FOCUS
1005 West 190th Street
Gardena, California 90248
Tel: 310.323.9924
Fax: 310.323.9925

REGISTERED PROFESSIONAL ENGINEER DAVID W. COOLEY No. S3005 Exp. 6/30/08 STRUCTURAL STATE OF CALIFORNIA

Building Department Submittal: June 1, 2007
Issued For Bid:
Issued For Construction: January 29, 2008

RECEIVED 10:56 am, Apr 21, 2008 FRAMEMAX

KEY PLAN

Project:
Jewish Home for The Aging
FOUNTAINVIEW AT EISENBERG VILLAGE
6440 Wilbur Ave
Reseda, CA. 91335

JEWISH HOME
JEWISH HOME FOR THE AGING
18855 Victory Blvd.
Reseda, CA 91335
Project Number: 05097

TYPICAL METAL DECK AND CFS DETAILS

Date: 1/29/2008
Drawn By: ENG Studios
Checked By: RK

S0.08
Sheet No.

© WWCOT 2006

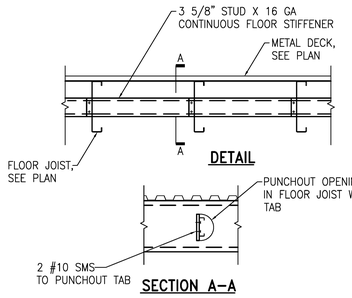

NOTE:
1. PROVIDE FLOOR STIFFENERS AT 8'-0" MAX SPACING. NOT REQUIRED FOR JOISTS SPANNING 4'-0" OR LESS.

17 TYPICAL CFS FLOOR STIFFENERS
N.T.S.

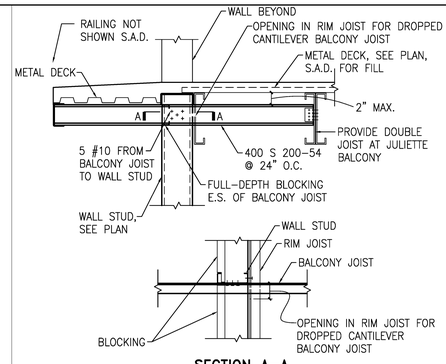

13 TYPICAL JULIETTE BALCONY
N.T.S.

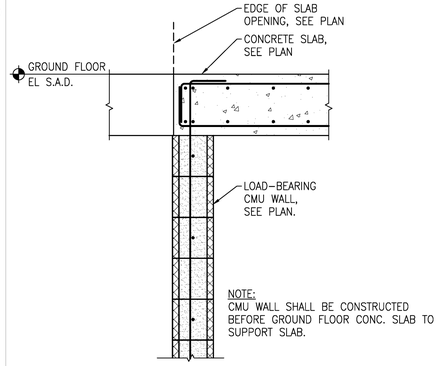

9 TOP OF CMU WALL
N.T.S.

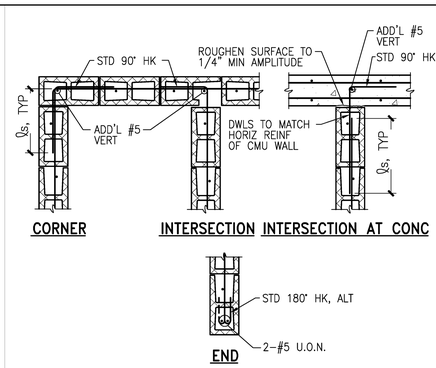

5 PLAN-WALL REINF AT CORNERS, INTERSECTIONS, AND ENDS (SINGLE CURTAIN)
N.T.S.

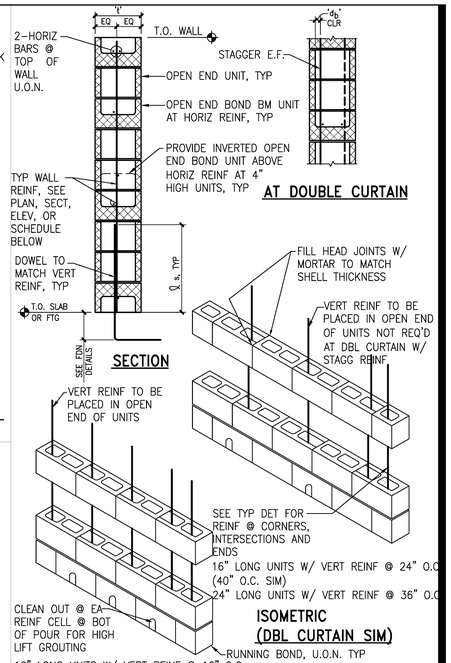

NOTES:
1. WHERE HSS 2x2 ALIGNS OVER PACO BEAM, WELD HSS DIRECT TO PACO TOP FLANGE

2. DETAIL IS SIMILAR WHERE JOISTS ARE PARALLEL TO BALCONY RAIL, PROVIDE ADDITIONAL JOIST AT INSIDE LEG OF BENT PLATE

18 BALCONY RAILING POST ANCHORAGE
N.T.S.

NOTE:
1. DETAIL IS SIMILAR WHERE BEARING WALL IS LOCATED BELOW AND PARALLEL TO PARAPET WALL. PROVIDE ADDITIONAL WALL STUDS BELOW AT STRAPS.

2. DETAIL IS SIMILAR WHERE ROOF JOISTS RUN PARALLEL TO PARAPET WALL. PROVIDE ADDITIONAL ROOF JOISTS AT STRAPS, SIM TO BLOCKING SHOWN.

3. PROVIDE THIS TYPICAL DETAIL AT END OF PARAPET WING WALL AND AT 3'-0" O.C. MAX, WHERE WING WALL IS LONGER THAN 3'-0".

14 BRACED STUD AT PARAPET WING WALL
N.T.S.

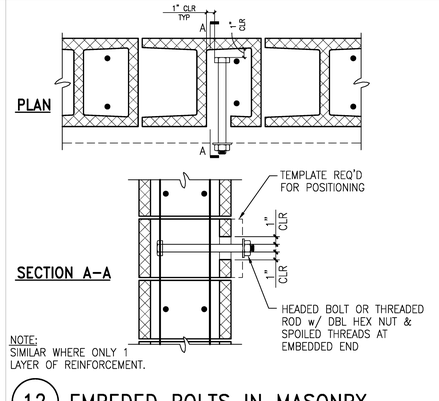

10 BOTTOM OF CMU WALL
N.T.S.

CMU REINF DEVELOPMENT & SPLICE LENGTHS (INCHES)													
BAR LOCATION	CONC. MASONRY UNIT		BAR SIZE										
	TYPE	STRENGTH	#3		#4		#5		#6		#7		#8		#9	
			ℓd	ℓs	ℓd	ℓs	ℓd	ℓs	ℓd	ℓs	ℓd	ℓs	ℓd	ℓs	ℓd	ℓs
CONC MASONRY UNIT	–	f'm ≥ 1.5 ksi	25	25	33	33	41	41	49	49	57	57	65	65	74	74

NOTES:
1. ℓd = DEVELOPMENT LENGTH

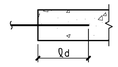

2. ℓs = LAP SPLICE LENGTH

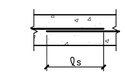

6 CMU REINFORCEMENT DEVELOPMENT & SPLICE LENGTHS
N.T.S.

WALL REINFORCING SCHEDULE			
NOM WALL THICKNESS 't'	VERT REINF	HORIZ REINF	REMARKS
6"	#4 @ 24" O.C.	#4 @ 24" O.C.	3' MAX PLANTER (FENCE WALL)
8"	#5 @ 24" O.C.	#4 @ 32" O.C.	4' MAX PLANTER (FENCE WALL)
8"	#5 @ 16" O.C.	#4 @ 16" O.C.	GARAGE BEARING WALLS
12"	#5 @ 16" O.C. E.F.	#4 @ 24" O.C.	
16"	#6 @ 16" O.C. E.F.	#5 @ 24" O.C.	

NOTES:
1. ALL CELLS TO BE FULLY GROUTED.
2. SECURE REINF AT 200 d MAX.
3. CONCAVE JOINTS, TYP, U.O.N.

2 WALL REINFORCING
N.T.S.

11 FENCE WALL COLUMN
N.T.S.

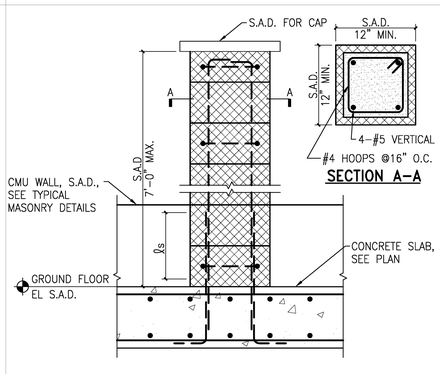

7 BAR SPACING IN MASONRY
N.T.S.

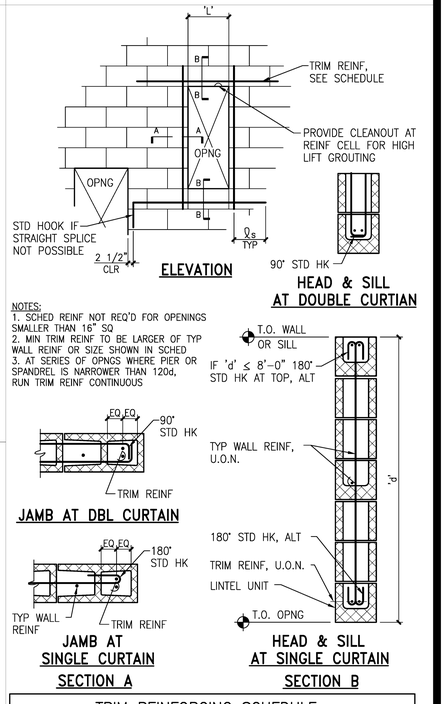

TRIM REINFORCING SCHEDULE					
NOM WALL THICKNESS 't'	MINIMUM TRIM REINF	'L' (ft)	JAMB REINF	HEADER REINF	SILL REINF
8"	2-#5				
10"	2-#5				
12"	2-#5				
16"	2-#5 E.F.				

4 WALL REINFORCEMENT AT OPENINGS
N.T.S.

NOTE:
SIMILAR WHERE ONLY 1 LAYER OF REINFORCEMENT.

12 EMBEDED BOLTS IN MASONRY
N.T.S.

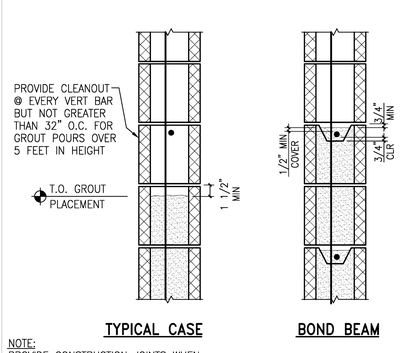

NOTE:
PROVIDE CONSTRUCTION JOINTS WHEN GROUTING IS STOPPED FOR MORE THAN 1 HOUR.

8 HORIZONTAL CONSTRUCTION JOINT
N.T.S.

© WWCOT 2006

WWCOT
Widom Wein Cohen O'Leary Terasawa
3130 Wilshire Boulevard
Sixth Floor
Santa Monica, California 90403
T (310) 828-0040
F (310) 453-9432
www.wwcot.com
Inland Empire
Palm Springs
Moorpark
Shanghai, China

STRUCTURAL FOCUS
1005 West 190th Street
Gardena, California 90248
Tel: 310.323.9924
Fax: 310.323.9925

REGISTERED PROFESSIONAL ENGINEER DAVID W. COOLEY No. S3005 Exp. 6/30/08 STRUCTURAL STATE OF CALIFORNIA

Building Department Submittal: June 1, 2007
Issued For Bid:
Issued For Construction: January 29, 2008

RECEIVED 10:56 am, Apr 21, 2008 FRAMEMAX

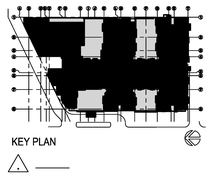

Project:
Jewish Home for The Aging
FOUNTAINVIEW AT EISENBERG VILLAGE
6440 Wilbur Ave
Reseda, CA. 91335

JEWISH HOME
JEWISH HOME FOR THE AGING
18855 Victory Blvd.
Reseda, CA 91335
Project Number: 05097

TYPICAL MASONRY AND CFS DETAILS

Date: 1/29/2008
Drawn By: ENG Studios
Checked By: RK

S0.09
Sheet No.

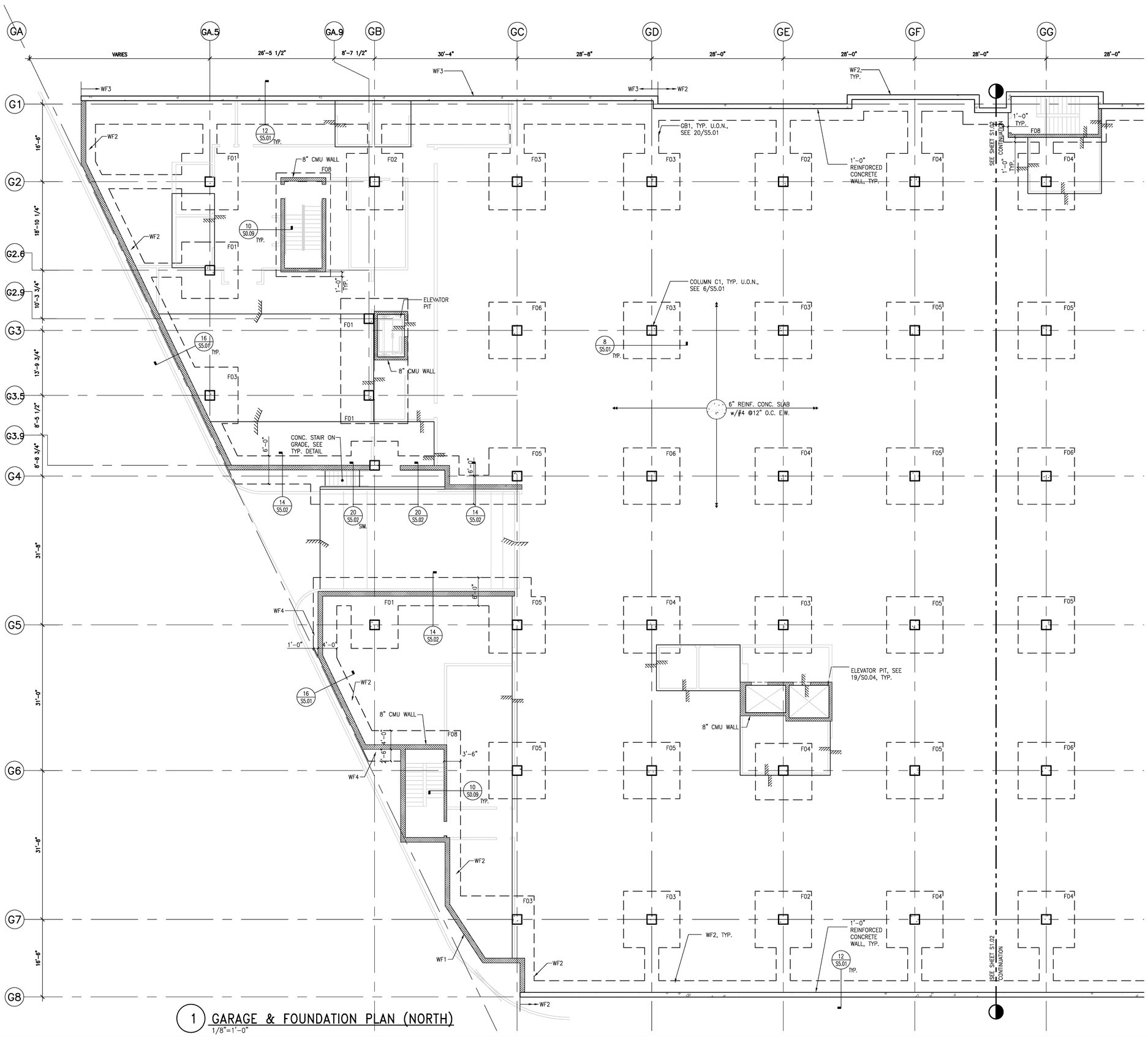

1 GARAGE & FOUNDATION PLAN (NORTH)
1/8"=1'-0"

SHEET NOTES:

1. TOP OF SLAB-ON-GRADE = S.A.D.
2. TOP OF FOOTING = 1'-0" BELOW NEAREST ADJACENT SLAB U.O.N.
3. FOUNDATION MARK "F#" AND "WF#" REFERS TO FOOTING SCHEDULE ON 8/S5.01
4. FOUNDATION MARK "GB#" REFERS TO GRADE BEAM SCHEDULE ON 18/S5.01
5. COLUMN MARK "C#" REFERS TO CONCRETE COLUMN SCHEDULE ON 6/S5.01
6. REFER TO THE FOLLOWING DRAWINGS FOR DETAILS NOT SPECIFICALLY REFERENCED:
   - S0.04 TYPICAL CONCRETE DETAILS
   - S0.09 TYPICAL MASONRY DETAILS
   - S5.01 CONCRETE DETAILS
   - S5.02 CONCRETE DETAILS

© WWCOT 2006

WWCOT
Widom Wein Cohen O'Leary Terasawa

3130 Wilshire Boulevard
Sixth Floor
Santa Monica, California 90403
T (310) 828-0040
F (310) 453-9432
www.wwcot.com

Inland Empire
Palm Springs
Moorpark
Shanghai, China

STRUCTURAL FOCUS
1005 WEST 190TH STREET
GARDENA, CALIFORNIA 90248
TEL: 310.323.9924
FAX: 310.323.9925

REGISTERED PROFESSIONAL ENGINEER
DAVID W. COCKLE
No. S3005
Exp. 6/30/08
STRUCTURAL
STATE OF CALIFORNIA

Building Department Submittal: June 1, 2007
Issued For Bid:
Issued For Construction: January 29, 2008

RECEIVED
10:56 am, Apr 21, 2008
FRAMEMAX

KEY PLAN

Project:
Jewish Home for The Aging
FOUNTAINVIEW AT EISENBERG VILLAGE
6440 Wilbur Ave
Reseda, CA. 91335

JEWISH HOME FOR THE AGING
18855 Victory Blvd.
Reseda, CA 91335
Project Number: 05097

GARAGE & FNDN. PLAN (NORTH)

Date: 1/29/2008
Drawn By: ENG Studios
Checked By: RK

S1.01
Sheet No.

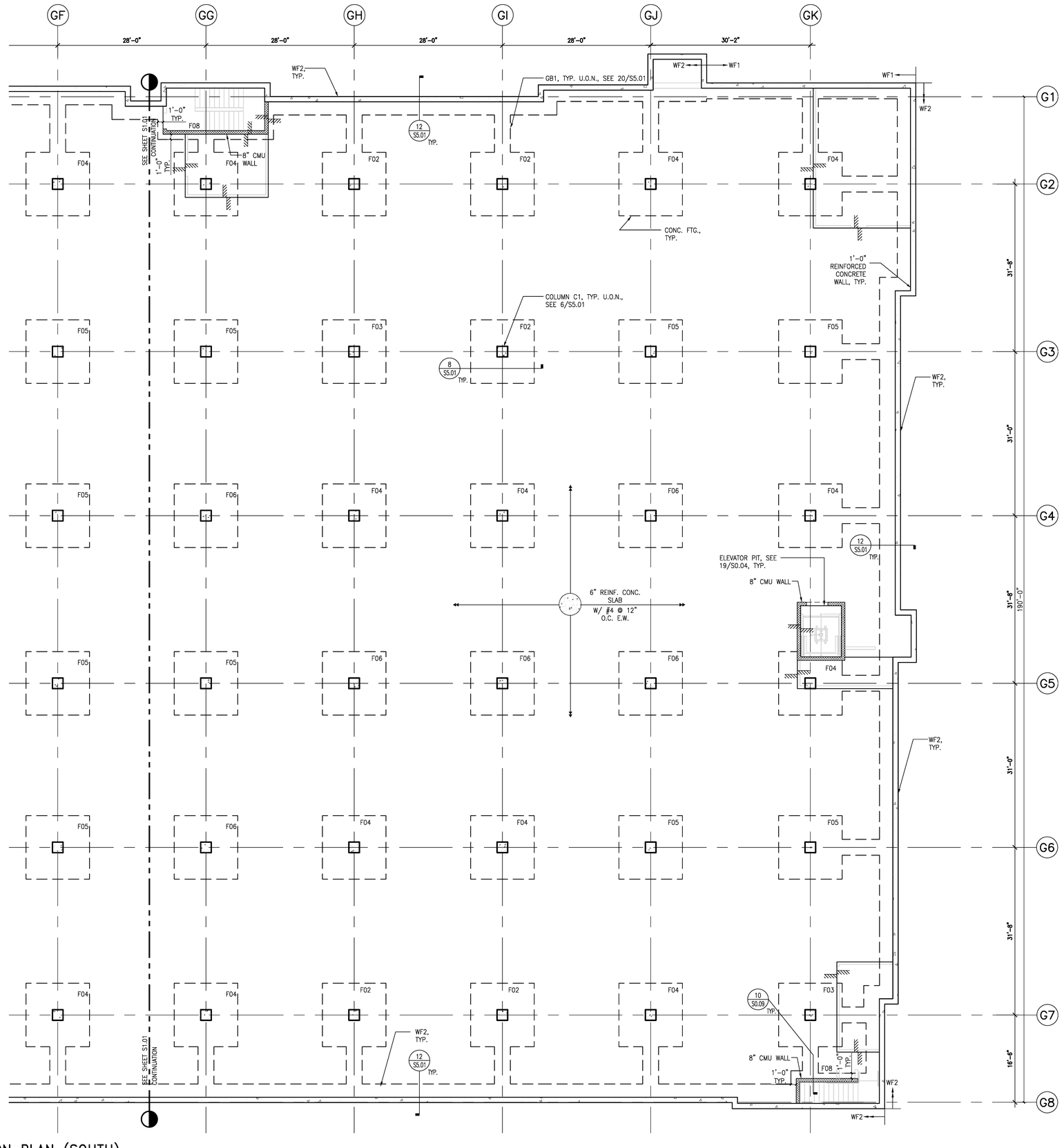

1 GARAGE & FOUNDATION PLAN (SOUTH)
1/8"=1'-0"

SHEET NOTES:

1. TOP OF SLAB-ON-GRADE = S.A.D.
2. TOP OF FOOTING = 1'-0" BELOW NEAREST ADJACENT SLAB U.O.N.
3. FOUNDATION MARK "F#" AND "WF#" REFERS TO FOOTING SCHEDULE ON 8/S5.01
4. FOUNDATION MARK "GB#" REFERS TO GRADE BEAM SCHEDULE ON 18/S5.01
5. COLUMN MARK "C#" REFERS TO CONCRETE COLUMN SCHEDULE ON 6/S5.01
6. REFER TO THE FOLLOWING DRAWINGS FOR DETAILS NOT SPECIFICALLY REFERENCED:
   - S0.04 TYPICAL CONCRETE DETAILS
   - S0.09 TYPICAL MASONRY DETAILS
   - S5.01 CONCRETE DETAILS
   - S5.02 CONCRETE DETAILS

© WWCOT 2006

WWCOT
Widom Wein Cohen O'Leary Terasawa
3130 Wilshire Boulevard
Sixth Floor
Santa Monica, California 90403
T (310) 828-0040
F (310) 453-9432
www.wwcot.com

Inland Empire
Palm Springs
Moorpark
Shanghai, China

STRUCTURAL FOCUS
1005 WEST 190TH STREET
GARDENA, CALIFORNIA 90248
TEL: 310.323.9924
FAX: 310.323.9925

REGISTERED PROFESSIONAL ENGINEER DAVID W. COCHRAN No. S3005 Exp. 6/30/08 STRUCTURAL STATE OF CALIFORNIA

Building Department Submittal: June 1, 2007
Issued For Bid:
Issued For Construction: January 29, 2008

RECEIVED 10:56 am, Apr 21, 2008 FRAMEMAX

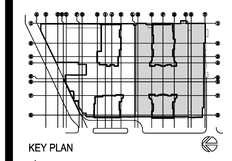

KEY PLAN

Project:
Jewish Home for The Aging
FOUNTAINVIEW AT EISENBERG VILLAGE
6440 Wilbur Ave
Reseda, CA. 91335

JEWISH HOME FOR THE AGING
18855 Victory Blvd.
Reseda, CA 91335
Project Number: 05097

GARAGE & FNDN. PLAN (SOUTH)

Date: 1/29/2008
Drawn By: ENG Studios
Checked By: RK

S1.02
Sheet No.



1 GROUND FLOOR SLAB PLAN (NORTH)
1/8"=1'-0"

© WWCOT 2006

SHEET NOTES:

1. TOP OF CONCRETE ELEVATION = S.A.D.
2. SLAB MARK "X-XXx" REFERS TO SLAB SCHEDULE ON SHEET S5.03.
   FOR COLUMN STRIPS (C-XXx), REFER TO 9/S5.02. FOR MIDDLE STRIPS (M-XXx), REFER TO 10/S5.02.
3. BEAM MARK "B#" REFERS TO CONCRETE BEAM SCHEDULE ON 14/S5.01
4. COORDINATE THE LOCATION OF SLAB OPENINGS WITH ARCHITECTURAL AND MEP DRAWINGS
5. REFER TO THE FOLLOWING DRAWINGS FOR DETAILS NOT SPECIFICALLY REFERENCED:
   - S0.04 TYPICAL CONCRETE DETAILS
   - S0.05 TYPICAL STEEL DETAILS
   - S0.06 TYPICAL COLD FORMED STEEL DETAILS
   - S0.07 TYPICAL COLD FORMED STEEL DETAILS
   - S0.09 TYPICAL MASONRY DETAILS
   - S5.01 CONCRETE DETAILS
   - S5.02 CONCRETE DETAILS

WWCOT
Widom Wein Cohen O'Leary Terasawa

3130 Wilshire Boulevard
Sixth Floor
Santa Monica, California 90403
T (310) 828-0040
F (310) 453-9432
www.wwcot.com

Inland Empire
Palm Springs
Moorpark
Shanghai, China

STRUCTURAL FOCUS
1005 WEST 190TH STREET
GARDENA, CALIFORNIA 90248
TEL: 310.323.9924
FAX: 310.323.9925

REGISTERED PROFESSIONAL ENGINEER
DAVID W. COCKLIN
No. S3005
Exp. 6/30/08
STRUCTURAL
STATE OF CALIFORNIA

Building Department Submittal: June 1, 2007
Issued For Bid:
Issued For Construction: January 29, 2008

RECEIVED
10:56 am, Apr 21, 2008
FRAMEMAX

KEY PLAN

Project:
Jewish Home for The Aging
FOUNTAINVIEW AT EISENBERG VILLAGE
6440 Wilbur Ave
Reseda, CA. 91335

JEWISH HOME
JEWISH HOME FOR THE AGING
18855 Victory Blvd.
Reseda, CA 91335

Project Number: 05097

GROUND FLOOR SLAB PLAN (NORTH)

Date: 1/29/2008
Drawn By: ENG Studios
Checked By: RK

S2.01A
Sheet No.

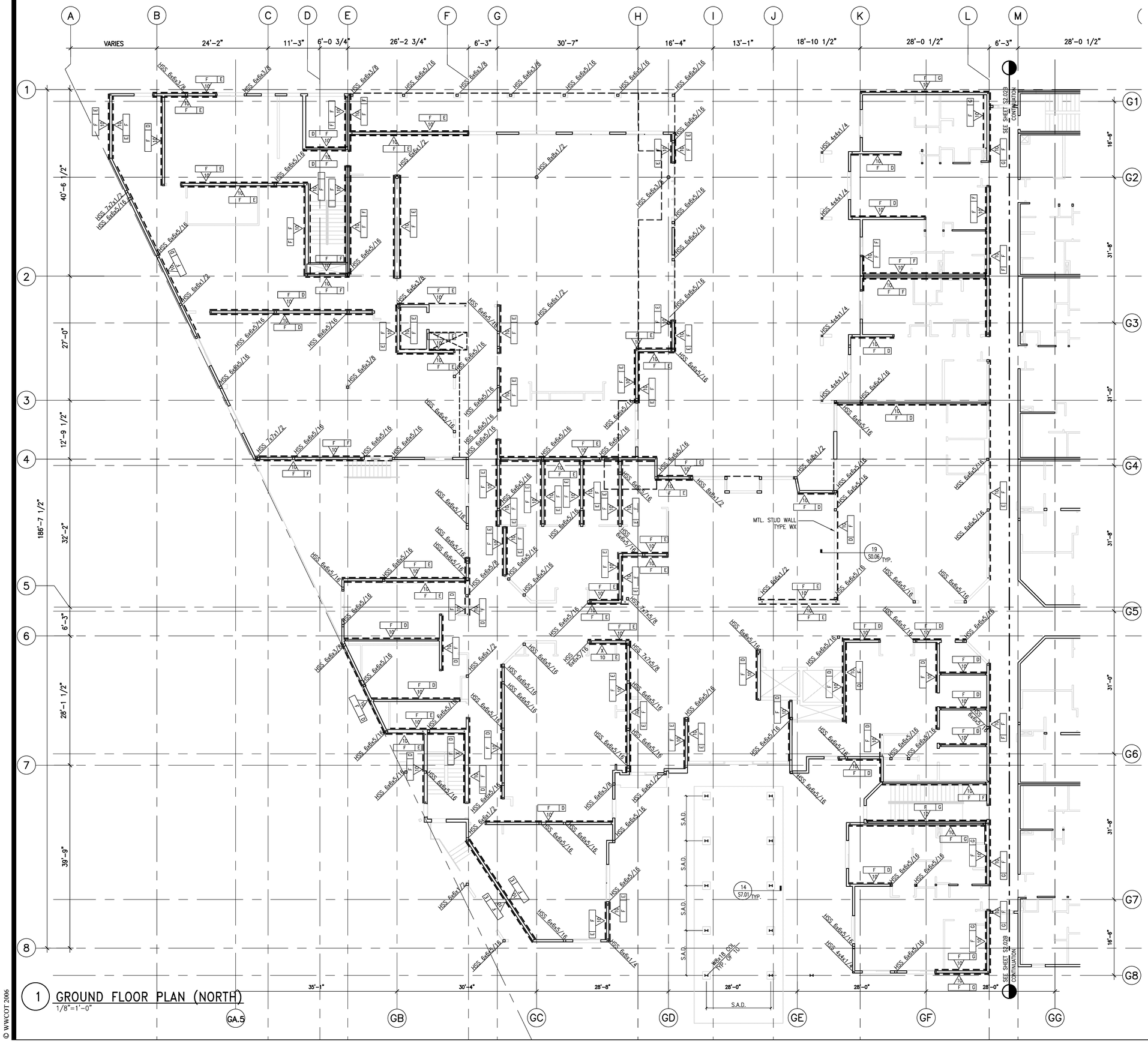

1 GROUND FLOOR PLAN (NORTH)
1/8"=1'-0"

SHEET NOTES:

1. TOP OF CONCRETE ELEVATION = S.A.D.
2. REFER TO 3/S0.03 FOR SUREBOARD SHEAR WALL CALLOUT CONVENTION AND 7/S0.07 FOR SUREBOARD SHEAR WALL SCHEDULE
3. FRAMING MARK "W##" REFERS TO WALL STUD SCHEDULE ON 7/S0.06
4. HEADERS AND KING STUDS AT BEARING WALL OPENINGS SHALL BE PER SCHEDULES ON 6/S0.06 U.O.N.
5. COORDINATE THE LOCATION OF SLAB OPENINGS WITH ARCHITECTURAL AND MEP DRAWINGS
6. REFER TO THE FOLLOWING DRAWINGS FOR DETAILS NOT SPECIFICALLY REFERENCED:
   S0.05 TYPICAL STEEL DETAILS
   S0.06 TYPICAL COLD FORMED STEEL DETAILS
   S0.07 TYPICAL COLD FORMED STEEL DETAILS

© WWCOT 2006

WWC OT
Widom Wein Cohen O'Leary Terasawa

3130 Wilshire Boulevard
Sixth Floor
Santa Monica, California 90403
T (310) 828-0040
F (310) 453-9432
www.wwcot.com

Inland Empire
Palm Springs
Moorpark
Shanghai, China

STRUCTURAL FOCUS
1005 WEST 190TH STREET
GARDENA, CALIFORNIA 90248
TEL: 310.323.9924
FAX: 310.323.9925

REGISTERED PROFESSIONAL ENGINEER
DAVID W. COCHRAN
No. S3005
Exp. 6/30/08
STRUCTURAL
STATE OF CALIFORNIA

Building Department Submittal: June 1, 2007
Issued For Bid:
Issued For Construction: January 29, 2008

RECEIVED
10:56 am, Apr 21, 2008
FRAMEMAX

KEY PLAN

Project:
Jewish Home for The Aging
FOUNTAINVIEW AT EISENBERG VILLAGE
6440 Wilbur Ave
Reseda, CA. 91335

JEWISH HOME
JEWISH HOME FOR THE AGING
18855 Victory Blvd.
Reseda, CA 91335
Project Number: 05097

GROUND FLOOR PLAN (NORTH)

Date: 1/29/2008
Drawn By: ENG Studios
Checked By: RK

S2.01B
Sheet No.

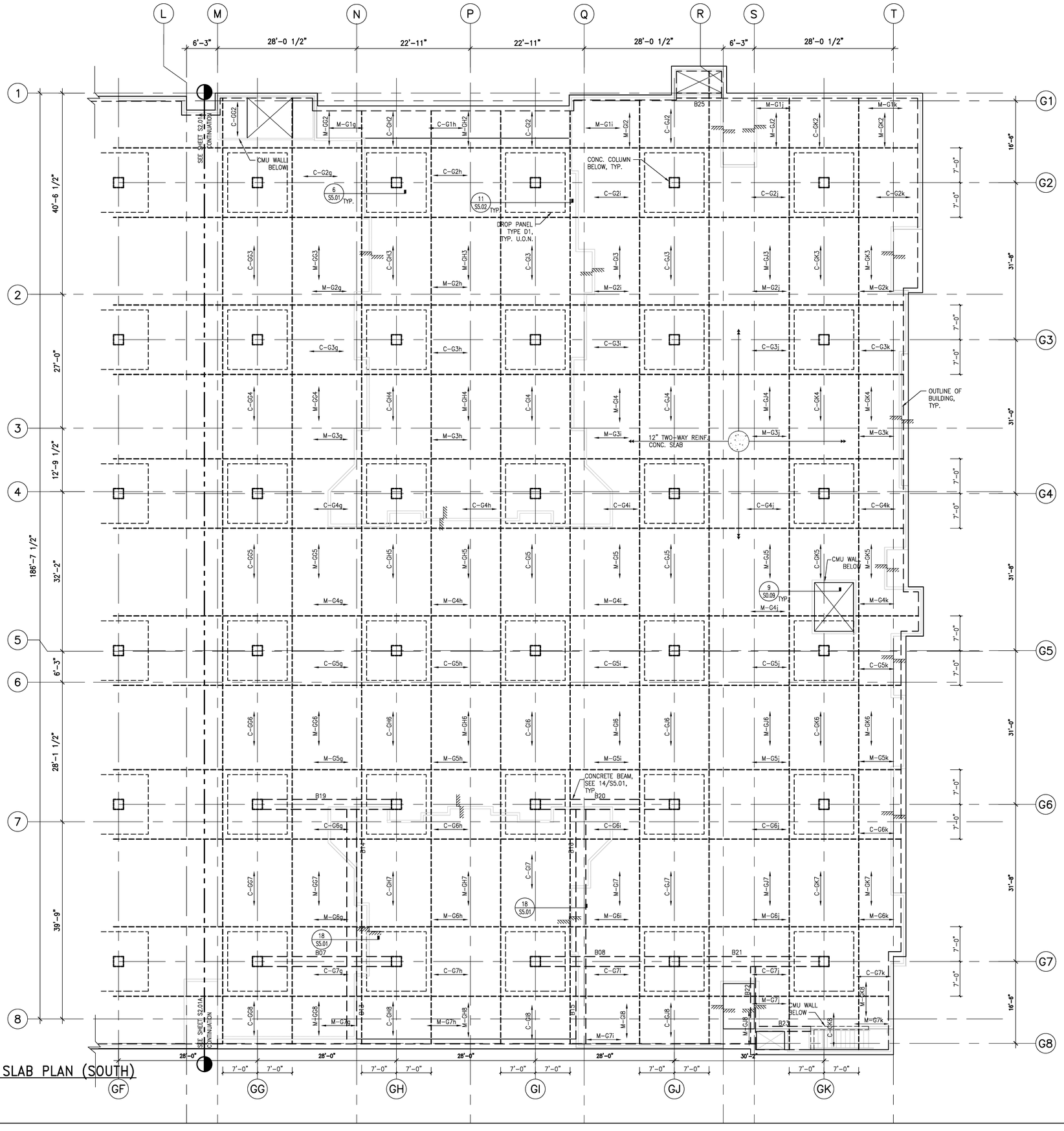

1 GROUND FLOOR SLAB PLAN (SOUTH)
1/8"=1'-0"

SHEET NOTES:

1. TOP OF CONCRETE ELEVATION = S.A.D.
2. SLAB MARK "X-XXx" REFERS TO SLAB SCHEDULE ON 8/S5.03 & 16/S5.03.
   FOR COLUMN STRIPS (C-XXx), REFER TO 9/S5.02. FOR MIDDLE STRIPS (M-XXx), REFER TO 10/S5.02.
3. BEAM MARK "B#" REFERS TO CONCRETE BEAM SCHEDULE ON 14/S5.01
4. COORDINATE THE LOCATION OF SLAB OPENINGS WITH ARCHITECTURAL AND MEP DRAWINGS
5. REFER TO THE FOLLOWING DRAWINGS FOR DETAILS NOT SPECIFICALLY REFERENCED:
   - S0.04 TYPICAL CONCRETE DETAILS
   - S0.05 TYPICAL STEEL DETAILS
   - S0.06 TYPICAL COLD FORMED STEEL DETAILS
   - S0.07 TYPICAL COLD FORMED STEEL DETAILS
   - S0.09 TYPICAL MASONRY DETAILS
   - S5.01 CONCRETE DETAILS
   - S5.02 CONCRETE DETAILS

© WWCOT 2006

WWCOT
Widom Wein Cohen O'Leary Terasawa

3130 Wilshire Boulevard
Sixth Floor
Santa Monica, California 90403
T (310) 828-0040
F (310) 453-9432
www.wwcot.com

Inland Empire
Palm Springs
Moorpark
Shanghai, China

STRUCTURAL FOCUS
1005 WEST 190TH STREET
GARDENA, CALIFORNIA 90248
TEL: 310.323.9924
FAX: 310.323.9925

REGISTERED PROFESSIONAL ENGINEER
DAVID W. COCKE
No. S3005
Exp. 6/30/08
STRUCTURAL
STATE OF CALIFORNIA

Building Department Submittal: June 1, 2007
Issued For Bid:
Issued For Construction: January 29, 2008

RECEIVED
10:56 am, Apr 21, 2008
FRAMEMAX

KEY PLAN

Project:
Jewish Home for The Aging
FOUNTAINVIEW AT EISENBERG VILLAGE
6440 Wilbur Ave
Reseda, CA. 91335

JEWISH HOME
JEWISH HOME FOR THE AGING
18855 Victory Blvd.
Reseda, CA 91335
Project Number: 05097

GROUND FLOOR SLAB PLAN (SOUTH)

Date: 1/29/2008
Drawn By: ENG Studios
Checked By: RK

S2.02A
Sheet No.

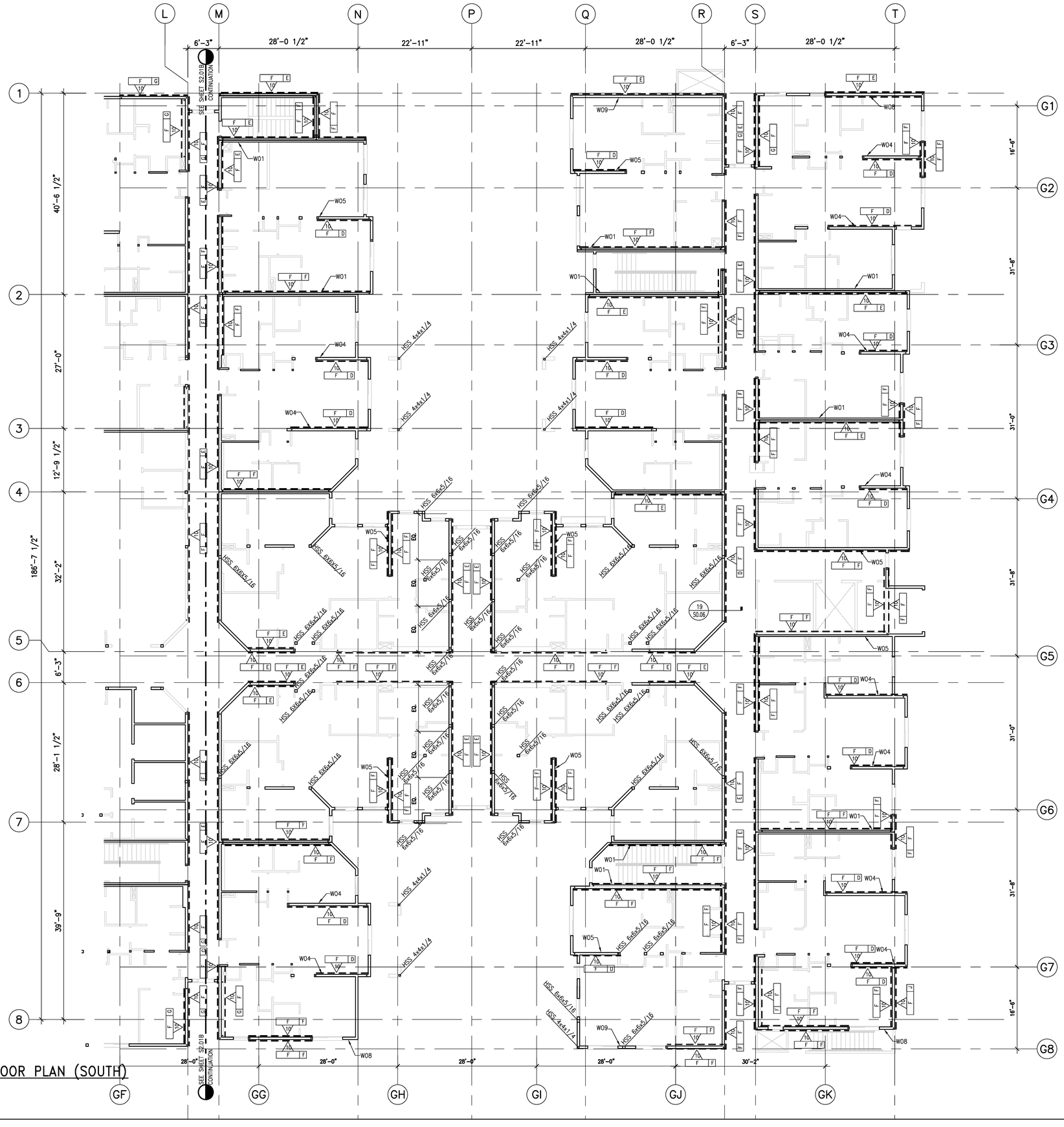

1 GROUND FLOOR PLAN (SOUTH)
1/8"=1'-0"

© WWCOT 2006

SHEET NOTES:

1. TOP OF CONCRETE ELEVATION = S.A.D.
2. REFER TO 3/S0.03 FOR SUREBOARD SHEAR WALL CALLOUT CONVENTION AND 7/S0.07 FOR SUREBOARD SHEAR WALL SCHEDULE
3. FRAMING MARK "W##" REFERS TO WALL STUD SCHEDULE ON 7/S0.06
4. HEADERS AND KING STUDS AT BEARING WALL OPENINGS SHALL BE PER SCHEDULES ON 6/S0.06 U.O.N.
5. COORDINATE THE LOCATION OF SLAB OPENINGS WITH ARCHITECTURAL AND MEP DRAWINGS
6. REFER TO THE FOLLOWING DRAWINGS FOR DETAILS NOT SPECIFICALLY REFERENCED:
   S0.05 TYPICAL STEEL DETAILS
   S0.06 TYPICAL COLD FORMED STEEL DETAILS
   S0.07 TYPICAL COLD FORMED STEEL DETAILS

WWCOT
Widom Wein Cohen O'Leary Terasawa

3130 Wilshire Boulevard
Sixth Floor
Santa Monica, California 90403
T (310) 828-0040
F (310) 453-9432
www.wwcot.com

Inland Empire
Palm Springs
Moorpark
Shanghai, China

STRUCTURAL FOCUS
1005 WEST 190TH STREET
GARDENA, CALIFORNIA 90248
TEL: 310.323.9924
FAX: 310.323.9925

REGISTERED PROFESSIONAL ENGINEER
DAVID W. COCHRAN
No. S3005
Exp. 6/30/08
STRUCTURAL
STATE OF CALIFORNIA

Building Department Submittal: June 1, 2007
Issued For Bid:
Issued For Construction: January 29, 2008

RECEIVED
10:56 am, Apr 21, 2008
FRAMEMAX

KEY PLAN

Project:
Jewish Home for The Aging
FOUNTAINVIEW AT EISENBERG VILLAGE
6440 Wilbur Ave
Reseda, CA. 91335

JEWISH HOME FOR THE AGING
18855 Victory Blvd.
Reseda, CA 91335
Project Number: 05097

GROUND FLOOR PLAN (SOUTH)

Date: 1/29/2008
Drawn By: ENG Studios
Checked By: RK

S2.02B
Sheet No.

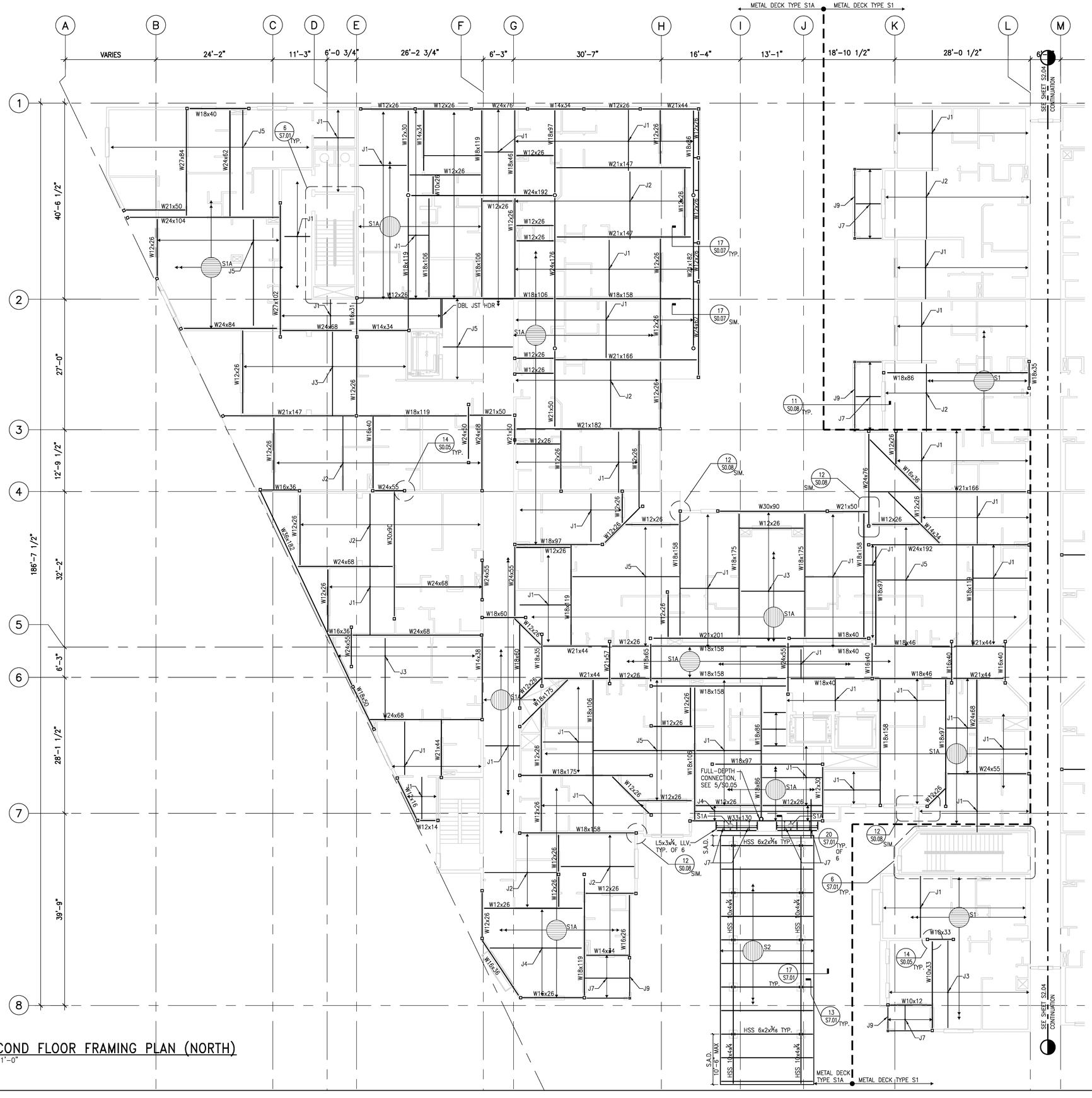

1 SECOND FLOOR FRAMING PLAN (NORTH)
1/8"=1'-0"

SHEET NOTES:

1. TOP OF STEEL FRAMING ELEVATION = S.A.D.
2. FRAMING MARK "J#" REFERS TO JOIST SCHEDULE ON 20/S0.07
3. METAL DECK MARK "S#" REFERS TO METAL DECK SCHEDULE ON 5/S0.08
4. COORDINATE THE LOCATION OF FLOOR OPENINGS WITH ARCHITECTURAL AND MEP DRAWINGS
5. REFER TO THE FOLLOWING DRAWINGS FOR DETAILS NOT SPECIFICALLY REFERENCED:
   - S0.05 TYPICAL STEEL DETAILS
   - S0.06 TYPICAL COLD FORMED STEEL DETAILS
   - S0.07 TYPICAL COLD FORMED STEEL DETAILS
   - S0.08 TYPICAL METAL DECK DETAILS

© WWCOT 2006

WWC OT
Widom Wein Cohen O'Leary Terasawa

3130 Wilshire Boulevard
Sixth Floor
Santa Monica, California 90403
T (310) 828-0040
F (310) 453-9432
www.wwcot.com

Inland Empire
Palm Springs
Moorpark
Shanghai, China

STRUCTURAL FOCUS
1005 WEST 190TH STREET
GARDENA, CALIFORNIA 90248
TEL: 310.323.9924
FAX: 310.323.9925

REGISTERED PROFESSIONAL ENGINEER DAVID W. COCHRAN No. S3005 Exp. 6/30/08 STRUCTURAL STATE OF CALIFORNIA

Building Department Submittal: June 1, 2007
Issued For Bid:
Issued For Construction: January 29, 2008

RECEIVED 10:56 am, Apr 21, 2008 FRAMEMAX

KEY PLAN

Project:
Jewish Home for The Aging
FOUNTAINVIEW AT EISENBERG VILLAGE
6440 Wilbur Ave
Reseda, CA. 91335

JEWISH HOME
JEWISH HOME FOR THE AGING
18855 Victory Blvd.
Reseda, CA 91335
Project Number: 05097

SECOND FLOOR FRAMING PLAN (NORTH)

Date: 1/29/2008
Drawn By: ENG Studios
Checked By: RK

S2.03A
Sheet No.

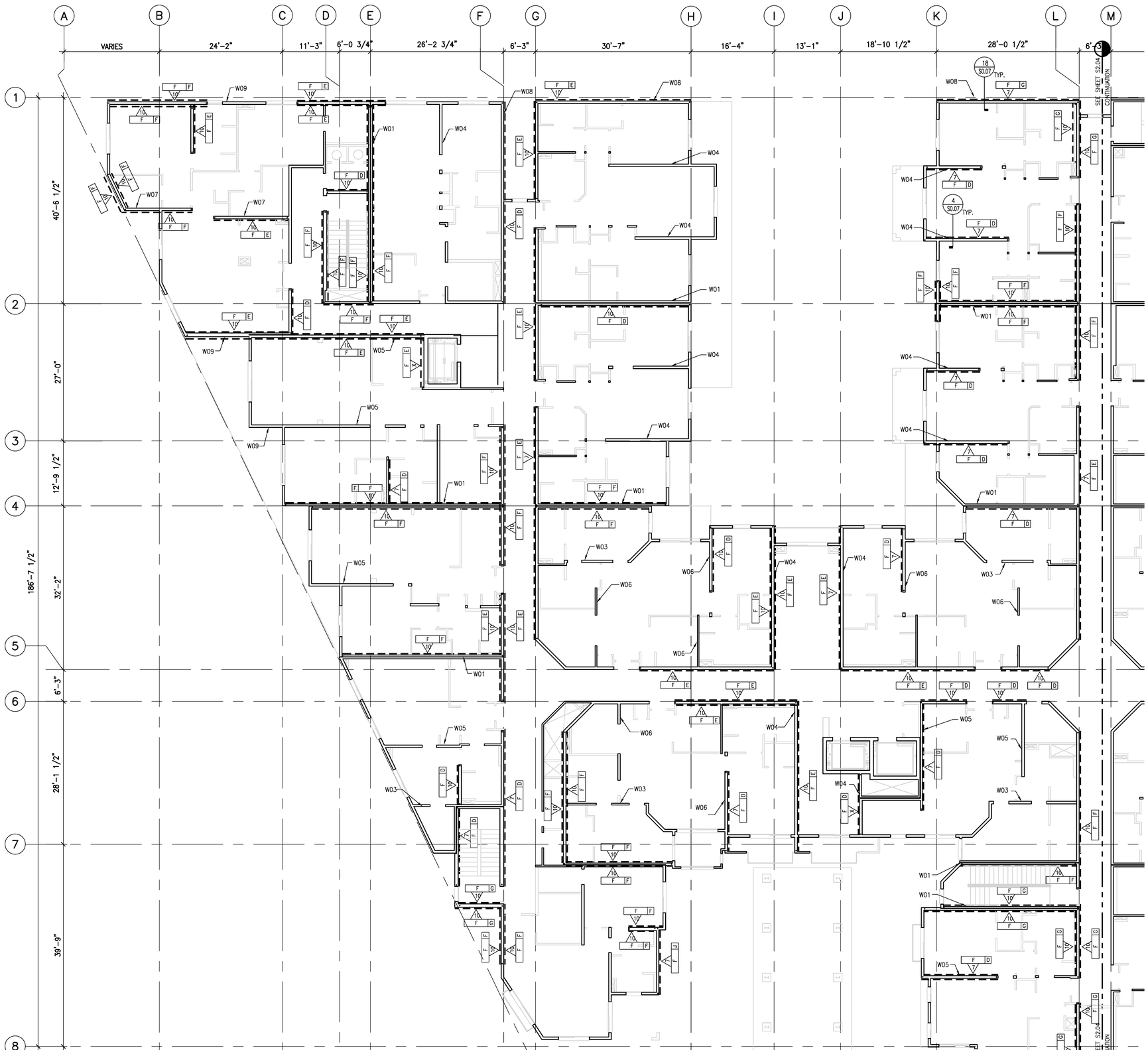

1 SECOND FLOOR WALL PLAN (NORTH)
1/8"=1'-0"

SHEET NOTES:

1. TOP OF STEEL FRAMING ELEVATION = S.A.D.
2. REFER TO 3/S0.03 FOR SUREBOARD SHEAR WALL CALLOUT CONVENTION AND 7/S0.07 FOR SUREBOARD SHEAR WALL SCHEDULE
3. FRAMING MARK "W##" REFERS TO WALL STUD SCHEDULE ON 7/S0.06
4. HEADERS AND KING STUDS AT BEARING WALL OPENINGS SHALL BE PER SCHEDULES ON 6/S0.06 U.O.N.
5. COORDINATE THE LOCATION OF FLOOR OPENINGS WITH ARCHITECTURAL AND MEP DRAWINGS
6. REFER TO THE FOLLOWING DRAWINGS FOR DETAILS NOT SPECIFICALLY REFERENCED:
   - S0.05 TYPICAL STEEL DETAILS
   - S0.06 TYPICAL COLD FORMED STEEL DETAILS
   - S0.07 TYPICAL COLD FORMED STEEL DETAILS
   - S0.08 TYPICAL METAL DECK DETAILS

© WWCOT 2006

WWCOT
Widom Wein Cohen O'Leary Terasawa
3130 Wilshire Boulevard
Sixth Floor
Santa Monica, California 90403
T (310) 828-0040
F (310) 453-9432
www.wwcot.com

Inland Empire
Palm Springs
Moorpark
Shanghai, China

STRUCTURAL FOCUS
1005 WEST 190TH STREET
GARDENA, CALIFORNIA 90248
TEL: 310.323.9924
FAX: 310.323.9925

REGISTERED PROFESSIONAL ENGINEER
DAVID W. COCHRAN
No. S3005
Exp. 6/30/08
STRUCTURAL
STATE OF CALIFORNIA

Building Department Submittal: June 1, 2007
Issued For Bid:
Issued For Construction: January 29, 2008

RECEIVED
10:56 am, Apr 21, 2008
FRAMEMAX

KEY PLAN

Project:
Jewish Home for The Aging
FOUNTAINVIEW AT EISENBERG VILLAGE
6440 Wilbur Ave
Reseda, CA. 91335

JEWISH HOME
JEWISH HOME FOR THE AGING
18855 Victory Blvd.
Reseda, CA 91335
Project Number: 05097

SECOND FLOOR WALL PLAN (NORTH)

Date: 1/29/2008
Drawn By: ENG Studios
Checked By: RK

S2.03B
Sheet No.

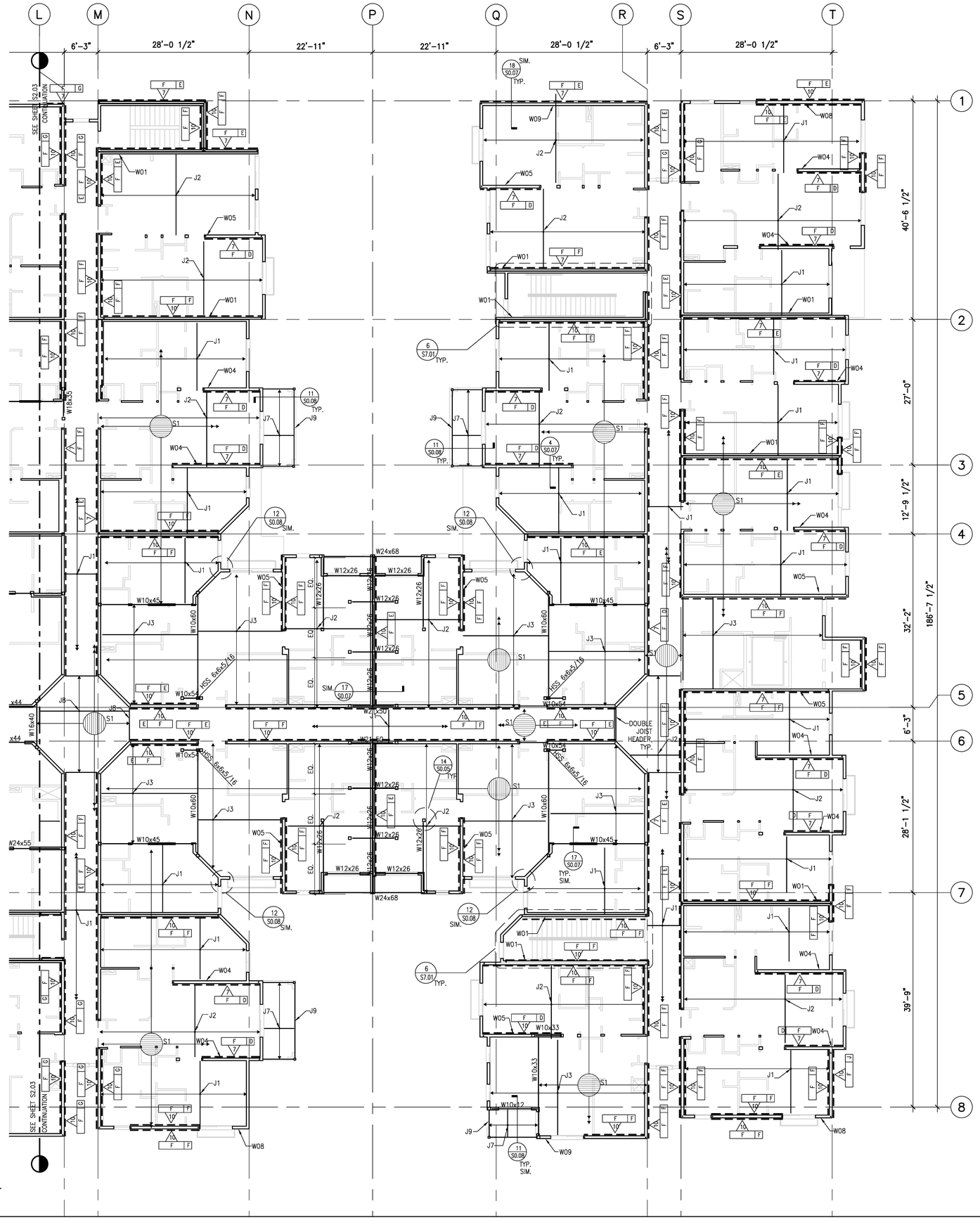

1 SECOND FLOOR FRAMING PLAN (SOUTH)
1/8"=1'-0"

SHEET NOTES:

1. TOP OF STEEL FRAMING ELEVATION = S.A.D.
2. FRAMING MARK "J#" REFERS TO JOIST SCHEDULE ON 20/S0.07
3. METAL DECK MARK "S#" REFERS TO METAL DECK SCHEDULE ON 5/S0.08
4. REFER TO 3/S0.03 FOR SUREBOARD SHEAR WALL CALLOUT CONVENTION AND 7/S0.07 FOR SUREBOARD SHEAR WALL SCHEDULE
5. FRAMING MARK "W##" REFERS TO WALL STUD SCHEDULE ON 7/S0.06
6. HEADERS AND KING STUDS AT BEARING WALL OPENINGS SHALL BE PER SCHEDULES ON 6/S0.06 U.O.N.
7. COORDINATE THE LOCATION OF FLOOR OPENINGS WITH ARCHITECTURAL AND MEP DRAWINGS
8. REFER TO THE FOLLOWING DRAWINGS FOR DETAILS NOT SPECIFICALLY REFERENCED:
   - S0.05 TYPICAL STEEL DETAILS
   - S0.06 TYPICAL COLD FORMED STEEL DETAILS
   - S0.07 TYPICAL COLD FORMED STEEL DETAILS
   - S0.08 TYPICAL METAL DECK DETAILS

© WWCOT 2006

WWCOT
Widom Wein Cohen O'Leary Terasawa

3130 Wilshire Boulevard
Sixth Floor
Santa Monica, California 90403
T (310) 828-0040
F (310) 453-9432
www.wwcot.com

Inland Empire
Palm Springs
Moorpark
Shanghai, China

STRUCTURAL FOCUS
1005 WEST 190TH STREET
GARDENA, CALIFORNIA 90248
TEL: 310.323.9924
FAX: 310.323.9925

REGISTERED PROFESSIONAL ENGINEER
DAVID W. COCKE
No. S3005
Exp. 6/30/08
STRUCTURAL
STATE OF CALIFORNIA

Building Department Submittal: June 1, 2007
Issued For Bid:
Issued For Construction: January 29, 2008

RECEIVED
10:56 am, Apr 21, 2008
FRAMEMAX

KEY PLAN

Project:
Jewish Home for The Aging
FOUNTAINVIEW AT EISENBERG VILLAGE
6440 Wilbur Ave
Reseda, CA. 91335

JEWISH HOME
JEWISH HOME FOR THE AGING
18855 Victory Blvd.
Reseda, CA 91335
Project Number: 05097

SECOND FLOOR FRAMING PLAN (SOUTH)

Date: 1/29/2008
Drawn By: ENG Studios
Checked By: RK

S2.04
Sheet No.

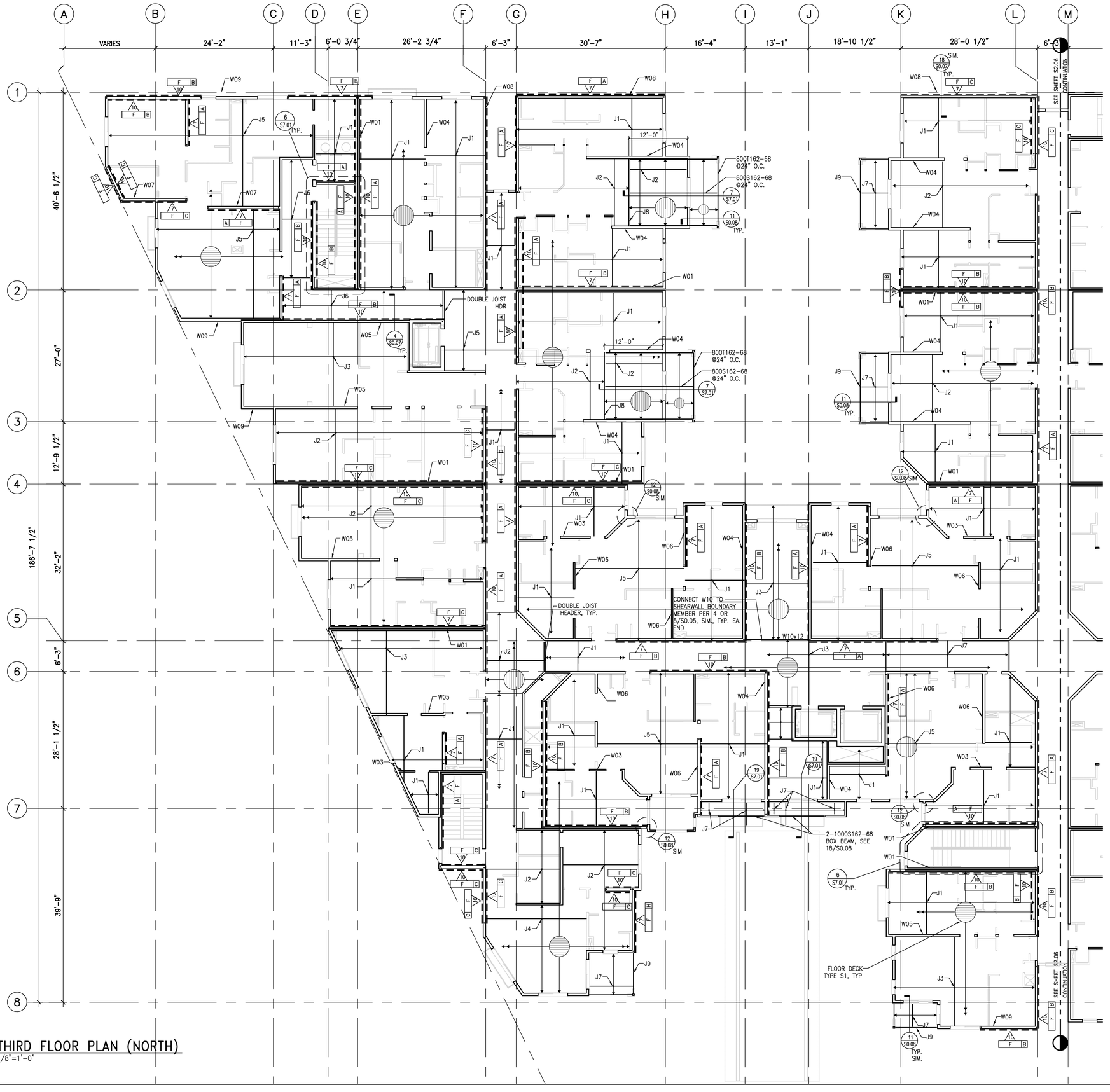

1 THIRD FLOOR PLAN (NORTH)
1/8"=1'-0"

SHEET NOTES:

1. TOP OF STEEL FRAMING ELEVATION = S.A.D.
2. FRAMING MARK "J#" REFERS TO JOIST SCHEDULE ON 20/S0.07
3. METAL DECK MARK "S#" REFERS TO METAL DECK SCHEDULE ON 5/S0.08
4. REFER TO 3/S0.03 FOR SUREBOARD SHEAR WALL CALLOUT CONVENTION AND 7/S0.07 FOR SUREBOARD SHEAR WALL SCHEDULE
5. FRAMING MARK "W##" REFERS TO WALL STUD SCHEDULE ON 7/S0.06
6. HEADERS AND KING STUDS AT BEARING WALL OPENINGS SHALL BE PER SCHEDULES ON 6/S0.06 U.O.N.
7. COORDINATE THE LOCATION OF FLOOR OPENINGS WITH ARCHITECTURAL AND MEP DRAWINGS
8. REFER TO THE FOLLOWING DRAWINGS FOR DETAILS NOT SPECIFICALLY REFERENCED:
   - S0.05 TYPICAL STEEL DETAILS
   - S0.06 TYPICAL COLD FORMED STEEL DETAILS
   - S0.07 TYPICAL COLD FORMED STEEL DETAILS
   - S0.08 TYPICAL METAL DECK DETAILS

© WWCOT 2006

WWCOT
Widom Wein Cohen O'Leary Terasawa

3130 Wilshire Boulevard
Sixth Floor
Santa Monica, California 90403
T (310) 828-0040
F (310) 453-9432
www.wwcot.com

Inland Empire
Palm Springs
Moorpark
Shanghai, China

STRUCTURAL FOCUS
1005 WEST 190TH STREET
GARDENA, CALIFORNIA 90248
TEL: 310.323.9924
FAX: 310.323.9925

REGISTERED PROFESSIONAL ENGINEER
DAVID W. COCHRAN
No. S3005
Exp. 6/30/08
STRUCTURAL
STATE OF CALIFORNIA

Building Department Submittal: June 1, 2007
Issued For Bid:
Issued For Construction: January 29, 2008

RECEIVED
10:56 am, Apr 21, 2008
FRAMEMAX

KEY PLAN

Project:
Jewish Home for The Aging
FOUNTAINVIEW AT EISENBERG VILLAGE
6440 Wilbur Ave
Reseda, CA. 91335

JEWISH HOME
JEWISH HOME FOR THE AGING
18855 Victory Blvd.
Reseda, CA 91335
Project Number: 05097

THIRD FLOOR PLAN (NORTH)

Date: 1/29/2008
Drawn By: ENG Studios
Checked By: RK

S2.05
Sheet No.

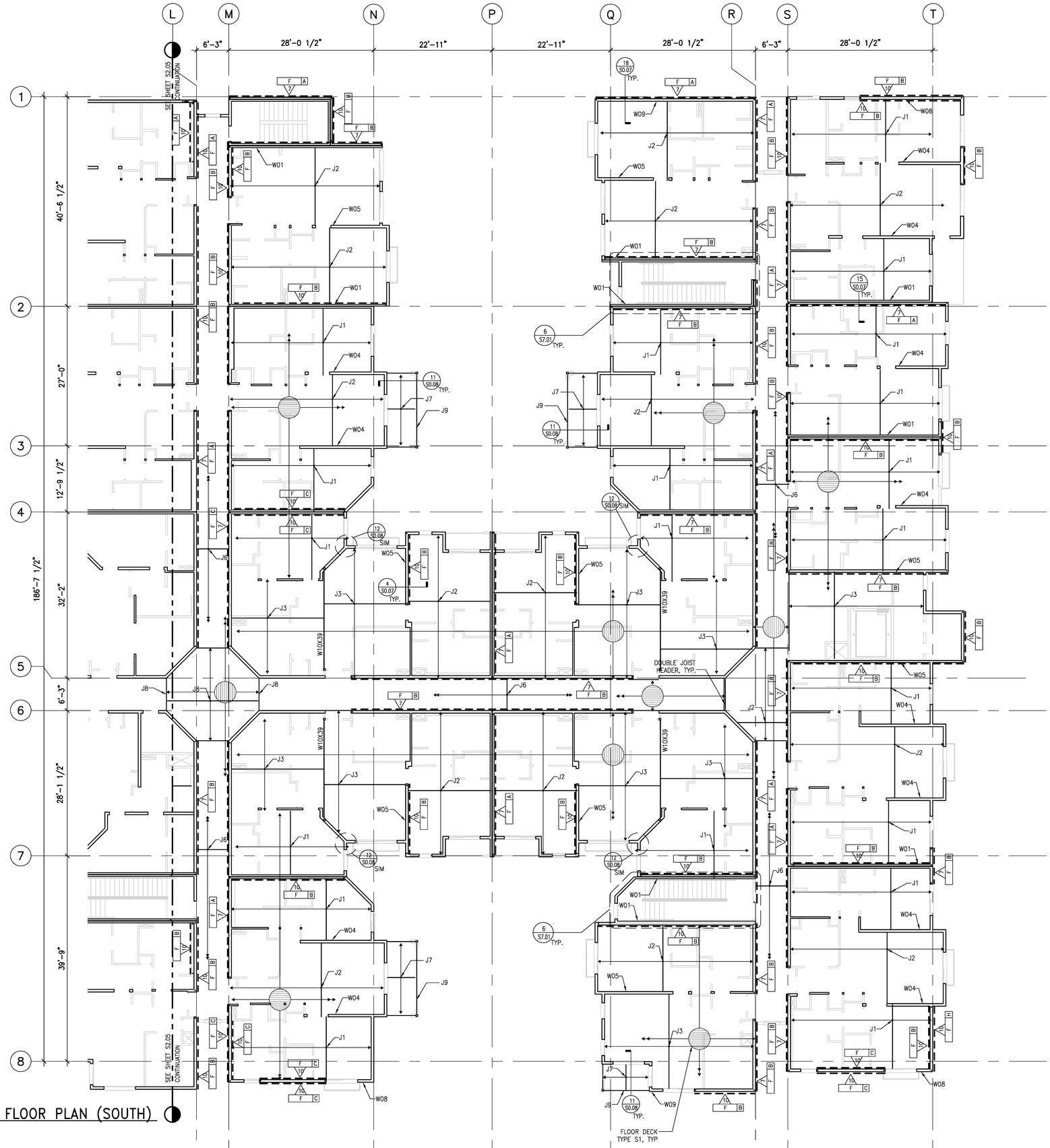

1 THIRD FLOOR PLAN (SOUTH)
1/8"=1'-0"

SHEET NOTES:

1. TOP OF STEEL FRAMING ELEVATION = S.A.D.
2. FRAMING MARK "J#" REFERS TO JOIST SCHEDULE ON 20/S0.07
3. METAL DECK MARK "S#" REFERS TO METAL DECK SCHEDULE ON 5/S0.08
4. REFER TO 3/S0.03 FOR SUREBOARD SHEAR WALL CALLOUT CONVENTION AND 7/S0.07 FOR SUREBOARD SHEAR WALL SCHEDULE
5. FRAMING MARK "W##" REFERS TO WALL STUD SCHEDULE ON 7/S0.06
6. HEADERS AND KING STUDS AT BEARING WALL OPENINGS SHALL BE PER SCHEDULES ON 6/S0.06 U.O.N.
7. COORDINATE THE LOCATION OF FLOOR OPENINGS WITH ARCHITECTURAL AND MEP DRAWINGS
8. REFER TO THE FOLLOWING DRAWINGS FOR DETAILS NOT SPECIFICALLY REFERENCED:
   - S0.05 TYPICAL STEEL DETAILS
   - S0.06 TYPICAL COLD FORMED STEEL DETAILS
   - S0.07 TYPICAL COLD FORMED STEEL DETAILS
   - S0.08 TYPICAL METAL DECK DETAILS

© WWCOT 2006

WWCOT
Widom Wein Cohen O'Leary Terasawa

3130 Wilshire Boulevard
Sixth Floor
Santa Monica, California 90403
T (310) 828-0040
F (310) 453-9432
www.wwcot.com

Inland Empire
Palm Springs
Moorpark
Shanghai, China

STRUCTURAL FOCUS
1005 WEST 190TH STREET
GARDENA, CALIFORNIA 90248
TEL: 310.323.9924
FAX: 310.323.9925

REGISTERED PROFESSIONAL ENGINEER DAVID W. COCHRAN No. S3005 Exp. 6/30/08 STRUCTURAL STATE OF CALIFORNIA

Building Department Submittal: June 1, 2007
Issued For Bid:
Issued For Construction: January 29, 2008

RECEIVED 10:56 am, Apr 21, 2008 FRAMEMAX

KEY PLAN

Project:
Jewish Home for The Aging
FOUNTAINVIEW AT EISENBERG VILLAGE
6440 Wilbur Ave
Reseda, CA. 91335

JEWISH HOME
JEWISH HOME FOR THE AGING
18855 Victory Blvd.
Reseda, CA 91335
Project Number: 05097

THIRD FLOOR PLAN (SOUTH)

Date: 1/29/2008
Drawn By: ENG Studios
Checked By: RK

S2.06
Sheet No.

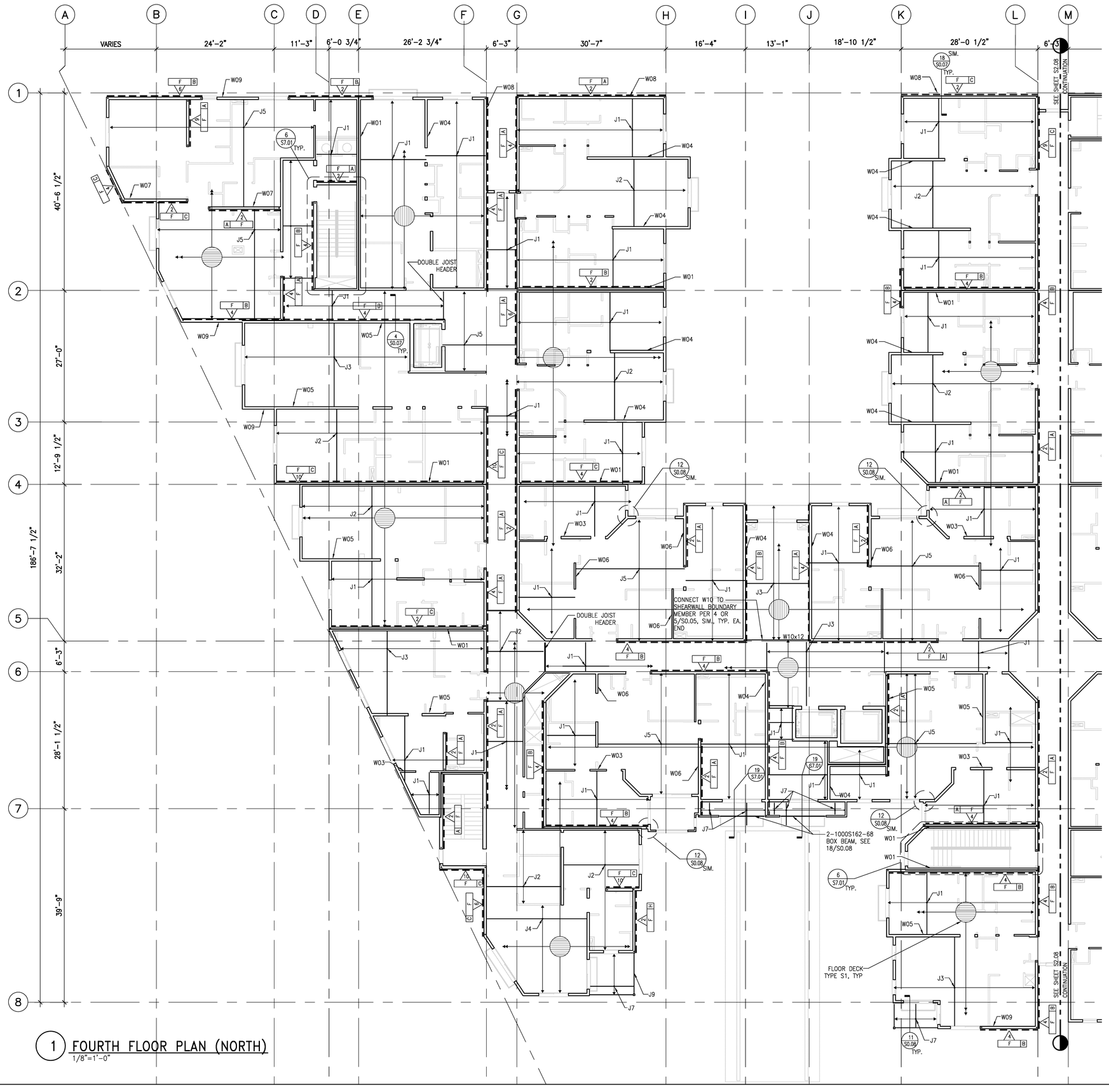

1 FOURTH FLOOR PLAN (NORTH)
1/8"=1'-0"

SHEET NOTES:

1. TOP OF STEEL FRAMING ELEVATION = S.A.D.
2. FRAMING MARK "J#" REFERS TO JOIST SCHEDULE ON 20/S0.07
3. METAL DECK MARK "S#" REFERS TO METAL DECK SCHEDULE ON 5/S0.08
4. REFER TO 3/S0.03 FOR SUREBOARD SHEAR WALL CALLOUT CONVENTION AND 7/S0.07 FOR SUREBOARD SHEAR WALL SCHEDULE
5. FRAMING MARK "W##" REFERS TO WALL STUD SCHEDULE ON 7/S0.06
6. HEADERS AND KING STUDS AT BEARING WALL OPENINGS SHALL BE PER SCHEDULES ON 6/S0.06 U.O.N.
7. COORDINATE THE LOCATION OF FLOOR OPENINGS WITH ARCHITECTURAL AND MEP DRAWINGS
8. REFER TO THE FOLLOWING DRAWINGS FOR DETAILS NOT SPECIFICALLY REFERENCED:
   S0.05 TYPICAL STEEL DETAILS
   S0.06 TYPICAL COLD FORMED STEEL DETAILS
   S0.07 TYPICAL COLD FORMED STEEL DETAILS
   S0.08 TYPICAL METAL DECK DETAILS

© WWCOT 2006

WWC OT
Widom Wein Cohen O'Leary Terasawa

3130 Wilshire Boulevard
Sixth Floor
Santa Monica, California 90403
T (310) 828-0040
F (310) 453-9432
www.wwcot.com

Inland Empire
Palm Springs
Moorpark
Shanghai, China

STRUCTURAL FOCUS
1005 West 190th Street
Gardena, California 90248
Tel: 310.323.9924
Fax: 310.323.9925

REGISTERED PROFESSIONAL ENGINEER DAVID W. COCKE No. S3005 Exp. 6/30/08 STRUCTURAL STATE OF CALIFORNIA

Building Department Submittal: June 1, 2007
Issued For Bid:
Issued For Construction: January 29, 2008

RECEIVED 10:56 am, Apr 21, 2008 FRAMEMAX

KEY PLAN

Project:
Jewish Home for The Aging
FOUNTAINVIEW AT EISENBERG VILLAGE
6440 Wilbur Ave
Reseda, CA. 91335

JEWISH HOME
JEWISH HOME FOR THE AGING
18855 Victory Blvd.
Reseda, CA 91335
Project Number: 05097

FOURTH FLOOR PLAN (NORTH)

Date: 1/29/2008
Drawn By: ENG Studios
Checked By: RK

S2.07
Sheet No.

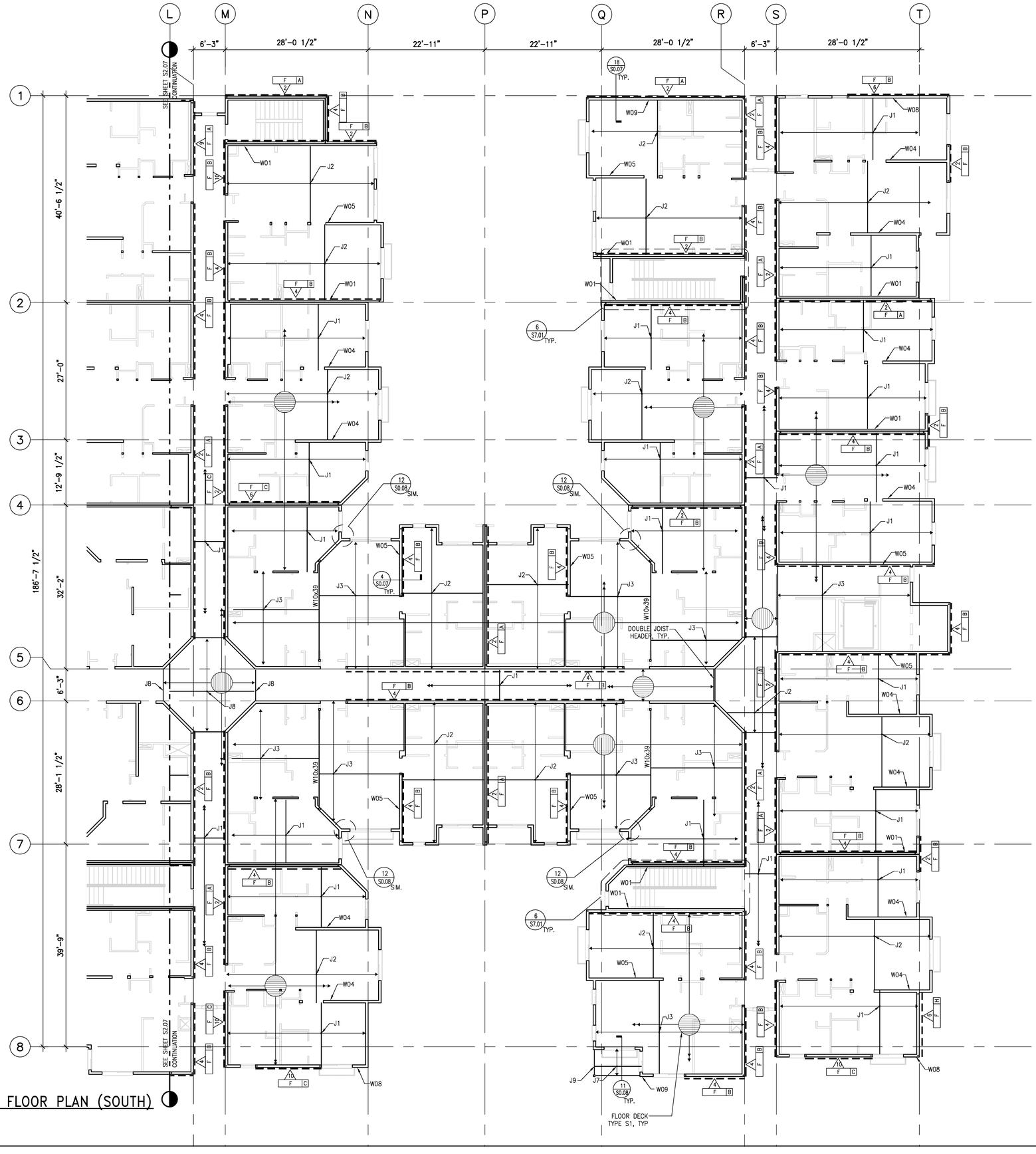

1 FOURTH FLOOR PLAN (SOUTH)
1/8"=1'-0"

SHEET NOTES:

1. TOP OF STEEL FRAMING ELEVATION = S.A.D.
2. FRAMING MARK "J#" REFERS TO JOIST SCHEDULE ON 20/S0.07
3. METAL DECK MARK "S#" REFERS TO METAL DECK SCHEDULE ON 5/S0.08
4. REFER TO 3/S0.03 FOR SUREBOARD SHEAR WALL CALLOUT CONVENTION AND 7/S0.07 FOR SUREBOARD SHEAR WALL SCHEDULE
5. FRAMING MARK "W##" REFERS TO WALL STUD SCHEDULE ON 7/S0.06
6. HEADERS AND KING STUDS AT BEARING WALL OPENINGS SHALL BE PER SCHEDULES ON 6/S0.06 U.O.N.
7. COORDINATE THE LOCATION OF FLOOR OPENINGS WITH ARCHITECTURAL AND MEP DRAWINGS
8. REFER TO THE FOLLOWING DRAWINGS FOR DETAILS NOT SPECIFICALLY REFERENCED:
   - S0.05 TYPICAL STEEL DETAILS
   - S0.06 TYPICAL COLD FORMED STEEL DETAILS
   - S0.07 TYPICAL COLD FORMED STEEL DETAILS
   - S0.08 TYPICAL METAL DECK DETAILS

© WWCOT 2006

WWCOT
Widom Wein Cohen O'Leary Terasawa

3130 Wilshire Boulevard
Sixth Floor
Santa Monica, California 90403
T (310) 828-0040
F (310) 453-9432
www.wwcot.com

Inland Empire
Palm Springs
Moorpark
Shanghai, China

STRUCTURAL FOCUS
1005 West 190th Street
Gardena, California 90248
Tel: 310.323.9924
Fax: 310.323.9925

REGISTERED PROFESSIONAL ENGINEER
DAVID W. COCHRAN
No. S3005
Exp. 6/30/08
STRUCTURAL
STATE OF CALIFORNIA

Building Department Submittal: June 1, 2007
Issued For Bid:
Issued For Construction: January 29, 2008

RECEIVED
10:56 am, Apr 21, 2008
FRAMEMAX

KEY PLAN

Project:
Jewish Home for The Aging
FOUNTAINVIEW AT EISENBERG VILLAGE
6440 Wilbur Ave
Reseda, CA. 91335

JEWISH HOME
JEWISH HOME FOR THE AGING
18855 Victory Blvd.
Reseda, CA 91335
Project Number: 05097

FOURTH FLOOR PLAN (SOUTH)

Date: 1/29/2008
Drawn By: ENG Studios
Checked By: RK

S2.08
Sheet No.

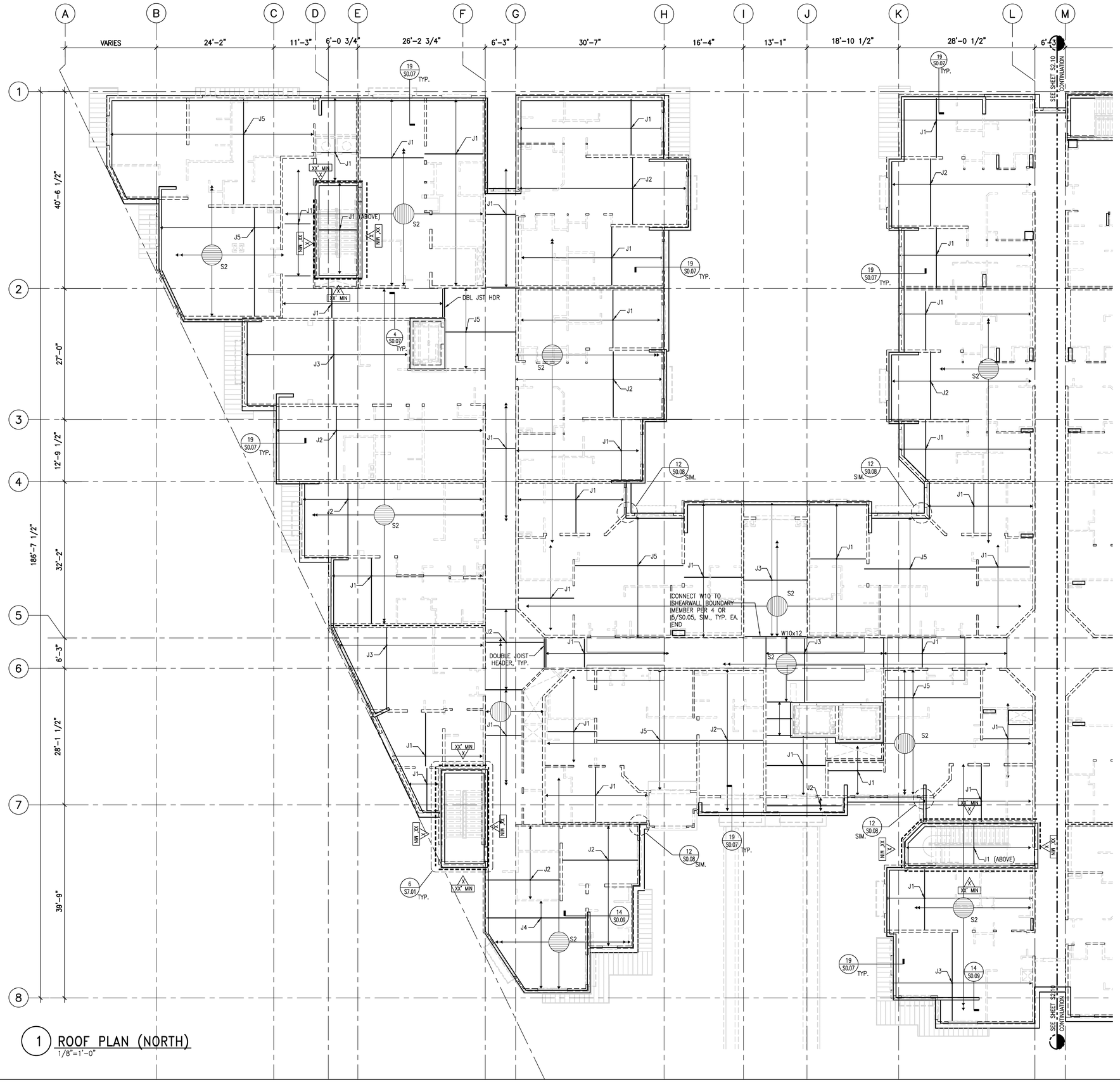

1 ROOF PLAN (NORTH)
1/8"=1'-0"

SHEET NOTES:

1. TOP OF STEEL FRAMING ELEVATION = S.A.D.
2. FRAMING MARK "J#" REFERS TO JOIST SCHEDULE ON 20/S0.07
3. METAL DECK MARK "S#" REFERS TO METAL DECK SCHEDULE ON 5/S0.08
4. COORDINATE THE LOCATION OF ROOF OPENINGS WITH ARCHITECTURAL AND MEP DRAWINGS
5. REFER TO THE FOLLOWING DRAWINGS FOR DETAILS NOT SPECIFICALLY REFERENCED:
   - S0.05 TYPICAL STEEL DETAILS
   - S0.06 TYPICAL COLD FORMED STEEL DETAILS
   - S0.07 TYPICAL COLD FORMED STEEL DETAILS
   - S0.08 TYPICAL METAL DECK DETAILS

© WWCOT 2006

WWCOT
Widom Wein Cohen O'Leary Terasawa

3130 Wilshire Boulevard
Sixth Floor
Santa Monica, California 90403
T (310) 828-0040
F (310) 453-9432
www.wwcot.com

Inland Empire
Palm Springs
Moorpark
Shanghai, China

STRUCTURAL FOCUS
1005 WEST 190TH STREET
GARDENA, CALIFORNIA 90248
TEL: 310.323.9924
FAX: 310.323.9925

REGISTERED PROFESSIONAL ENGINEER
DAVID W. COCHRAN
No. S3005
Exp. 6/30/08
STRUCTURAL
STATE OF CALIFORNIA

Building Department Submittal: June 1, 2007
Issued For Bid:
Issued For Construction: January 29, 2008

RECEIVED
10:56 am, Apr 21, 2008
FRAMEMAX

KEY PLAN

Project:
Jewish Home for The Aging
FOUNTAINVIEW AT EISENBERG VILLAGE
6440 Wilbur Ave
Reseda, CA. 91335

JEWISH HOME
JEWISH HOME FOR THE AGING
18855 Victory Blvd.
Reseda, CA 91335
Project Number: 05097

ROOF PLAN (NORTH)

Date: 1/29/2008
Drawn By: ENG Studios
Checked By: RK

S2.09
Sheet No.

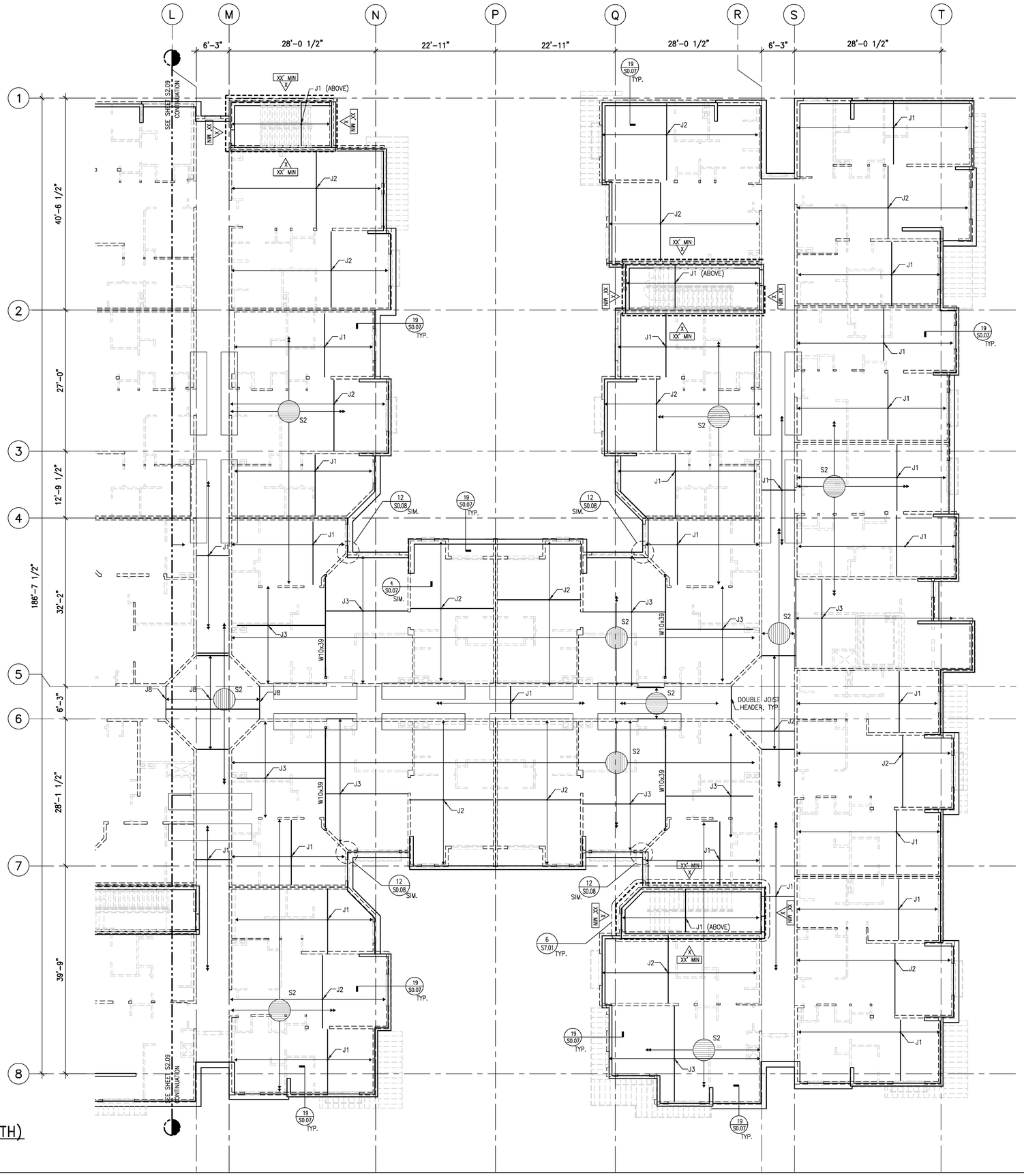

1 ROOF PLAN (SOUTH)
1/8"=1'-0"

SHEET NOTES:

1. TOP OF STEEL FRAMING ELEVATION = S.A.D.
2. FRAMING MARK "J#" REFERS TO JOIST SCHEDULE ON 20/S0.07
3. METAL DECK MARK "S#" REFERS TO METAL DECK SCHEDULE ON 5/S0.08
4. COORDINATE THE LOCATION OF ROOF OPENINGS WITH ARCHITECTURAL AND MEP DRAWINGS
5. REFER TO THE FOLLOWING DRAWINGS FOR DETAILS NOT SPECIFICALLY REFERENCED:
   - S0.05 TYPICAL STEEL DETAILS
   - S0.06 TYPICAL COLD FORMED STEEL DETAILS
   - S0.07 TYPICAL COLD FORMED STEEL DETAILS
   - S0.08 TYPICAL METAL DECK DETAILS

© WWCOT 2006

WWCOT
Widom Wein Cohen O'Leary Terasawa

3130 Wilshire Boulevard
Sixth Floor
Santa Monica, California 90403
T (310) 828-0040
F (310) 453-9432
www.wwcot.com

Inland Empire
Palm Springs
Moorpark
Shanghai, China

STRUCTURAL FOCUS
1005 WEST 190TH STREET
GARDENA, CALIFORNIA 90248
TEL: 310.323.9924
FAX: 310.323.9925

REGISTERED PROFESSIONAL ENGINEER
DAVID W. COCKE
No. S3005
Exp. 6/30/08
STRUCTURAL
STATE OF CALIFORNIA

Building Department Submittal: June 1, 2007
Issued For Bid:
Issued For Construction: January 29, 2008

RECEIVED
10:56 am, Apr 21, 2008
FRAMEMAX

KEY PLAN

Project:
Jewish Home for The Aging
FOUNTAINVIEW AT EISENBERG VILLAGE
6440 Wilbur Ave
Reseda, CA. 91335

JEWISH HOME
JEWISH HOME FOR THE AGING
18855 Victory Blvd.
Reseda, CA 91335
Project Number: 05097

ROOF PLAN (SOUTH)

Date: 1/29/2008
Drawn By: ENG Studios
Checked By: RK

S2.10
Sheet No.

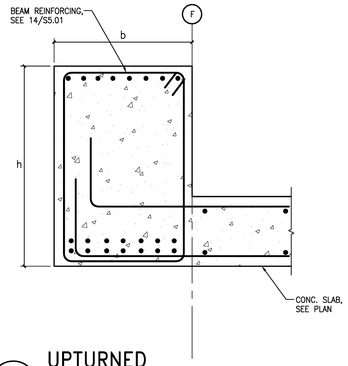

17 UPTURNED BEAM AT GARAGE ENTRY
1"=1'-0"

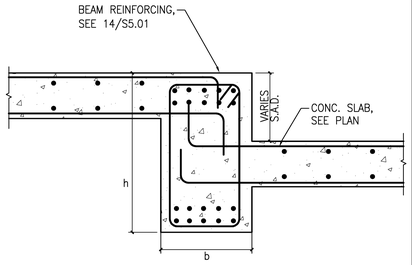

18 STEP IN SLAB AT COURTYARDS
1"=1'-0"

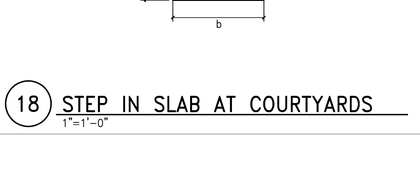

19 FREE EDGE AT SLAB ON GRADE
N.T.S.

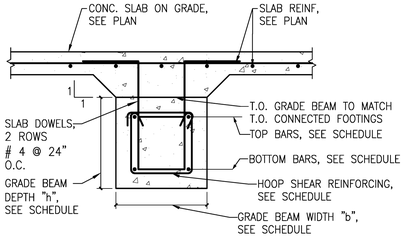

20 GRADE BEAM DETAIL
1"=1'-0"

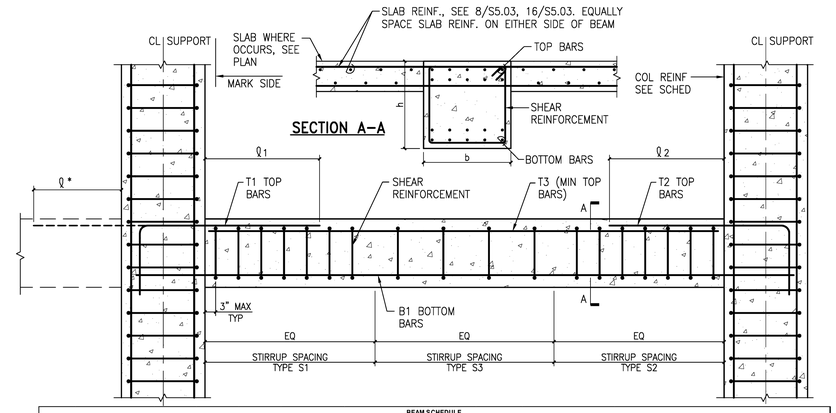

BEAM SCHEDULE

BEAM ID	b (IN)	h (IN)	T1*	T2	T3	B1	t1 (FT)	t2 (FT)	t*	S1	S2	S3	REFERENCE DETAIL	NOTE
B01	24	22	3-#9	3-#9	-	6-#9	14.33	14.33	-	#4 @ 4	#4 @ 4	#4 @ 8	-	-
B02	24	22	16-#9	4-#9	-	5-#9	11.83	18.83	-	#4 @ 6	#4 @ 6	#4 @ 6	-	T1 REINFORCING IN 2 LAYERS
B03	24	22	6-#6	6-#6	-	8-#9	14.33	11.83	-	#4 @ 4	#4 @ 4	#4 @ 10	-	-
B04	24	36	9-#9	-	-	9-#9	FULL LENGTH	-	-	#5 @ 6	#5 @ 6	#5 @ 12	17/-	B1 REINFORCING IN 2 LAYERS
B05	24	24	12-#9	-	-	18-#9	FULL LENGTH	-	-	#5 @ 3	#5 @ 3	#5 @ 3	-	B1 REINFORCING IN 2 LAYERS
B06	24	24	9-#9	-	-	8-#9	FULL LENGTH	-	-	#4 @ 3	#4 @ 3	#4 @ 6	-	-
B07	24	24	10-#9	-	-	7-#9	FULL LENGTH	-	-	#4 @ 4	#4 @ 4	#4 @ 8	-	T1 REINFORCING IN 2 LAYERS
B08	24	24	9-#9	-	-	7-#9	FULL LENGTH	-	-	#4 @ 4	#4 @ 4	#4 @ 8	-	-
B09	24	24 MIN	7-#9	-	-	8-#9	FULL LENGTH	-	-	#4 @ 9	#4 @ 9	#4 @ 9	18/-	-
B10	28	24 MIN	18-#9	-	-	22-#9	FULL LENGTH	-	-	#5 @ 2.5	#5 @ 2.5	#5 @ 6	18/-	T1, B1 REINFORCING IN 2 LAYERS
B11	24	24 MIN	6-#9	-	-	3-#9	FULL LENGTH	-	-	#4 @ 9	#4 @ 9	#4 @ 9	18/-	-
B12	24	24 MIN	8-#9	-	-	13-#9	FULL LENGTH	-	-	#4 @ 4	#4 @ 4	#4 @ 6	18/-	B1 REINFORCING IN 2 LAYERS
B13	24	24 MIN	6-#9	-	-	3-#9	FULL LENGTH	-	-	#4 @ 9	#4 @ 9	#4 @ 9	18/-	-
B14	24	24 MIN	11-#9	-	-	9-#9	FULL LENGTH	-	-	#4 @ 4	#4 @ 4	#4 @ 6	18/-	T1 REINFORCING IN 2 LAYERS
B15	24	24 MIN	6-#9	-	-	3-#9	FULL LENGTH	-	-	#4 @ 9	#4 @ 9	#4 @ 9	18/-	-
B16	24	24 MIN	13-#9	-	-	12-#9	FULL LENGTH	-	-	#5 @ 3	#5 @ 3	#5 @ 6	18/-	B1 REINFORCING IN 2 LAYERS
B17	24	24	12-#9	-	-	14-#9	FULL LENGTH	-	-	#5 @ 3	#5 @ 3	#5 @ 6	-	T1, B1 REINFORCING IN 2 LAYERS
B18	24	24	10-#9	-	-	7-#9	FULL LENGTH	-	-	#5 @ 3	#5 @ 3	#5 @ 6	-	-
B19	24	24	12-#9	-	-	5-#9	FULL LENGTH	-	-	#5 @ 3	#5 @ 3	#5 @ 6	-	-
B20	24	24	11-#9	-	-	6-#9	FULL LENGTH	-	-	#5 @ 3	#5 @ 3	#5 @ 6	-	-
B21	24	24	9-#9	-	-	7-#9	FULL LENGTH	-	-	#4 @ 4	#4 @ 4	#4 @ 8	-	-
B22	12	24	4-#9	-	-	4-#9	FULL LENGTH	-	-	#4 @ 3	#4 @ 3	#4 @ 6	-	-
B23	12	24	6-#9	-	-	6-#9	FULL LENGTH	-	-	#4 @ 4	#4 @ 4	#4 @ 8	-	-
B24	12	24 MIN	2-#9	2-#9	-	3-#9	6.00	6.00	-	#4 @ 6	#4 @ 6	#4 @ 10	-	-
B25	12	24	2-#9	2-#9	-	3-#9	4.50	4.50	-	#4 @ 6	#4 @ 6	#4 @ 10	-	-
GB1	24	24	-	3-#8	-	3-#8	-	-	-	#4 @ 10	#4 @ 10	#4 @ 10	14/- SIM. 20/-	-

* WHERE T1 IS FULL LENGTH IN COLUMN x 1, PROVIDE HOOK AT EACH END INTO SUPPORT.

14 BEAM SCHEDULE
N.T.S.

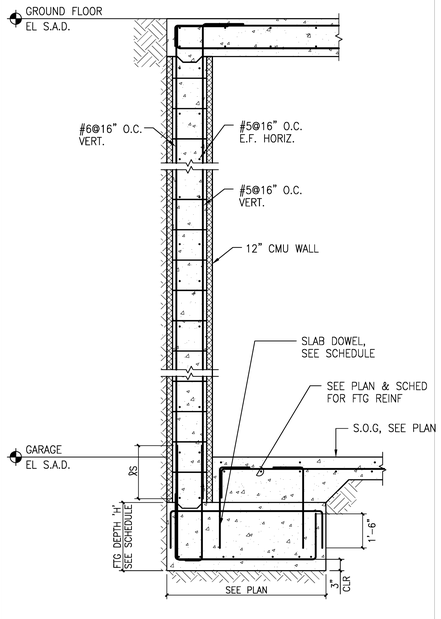

NOTE:
SEE ARCH DRAWINGS FOR WATERPROOFING REQUIREMENT'S

16 WALL SECTION
N.T.S.

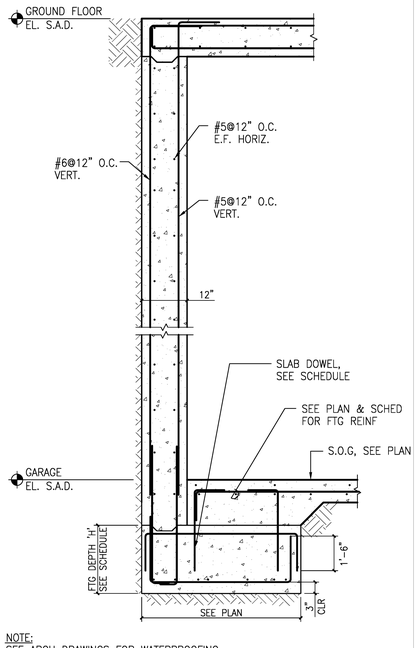

NOTE:
SEE ARCH DRAWINGS FOR WATERPROOFING REQUIREMENT'S

12 WALL SECTION
3/4"=1'-0"

COLUMN SCHEDULE					
GRIDLINES					
MARK	"a" (in)	"b" (in)	VERT BARS	CONF BAR SIZE	"s" (in)
C1	24	24	8-#8	#4	8

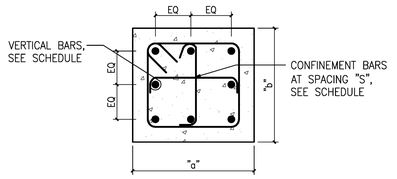

PLAN SECTION A-A

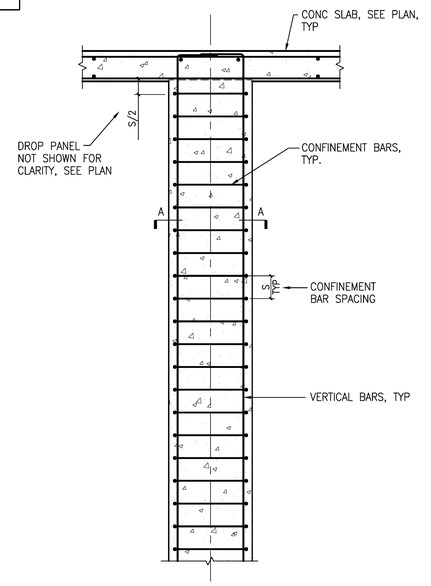

ELEVATION

6 TYPICAL GRAVITY COLUMN DETAILS
N.T.S.

FOOTING SCHEDULE

FOOTING ID	'H' DEPTH	'L' LENGTH	'W' WIDTH	BOTTOM REINFORCING		TOP REINFORCING		SLAB DOWELS	REMARKS
				LONGITUDINAL	TRANSVERSE	LONGITUDINAL	TRANSVERSE		
F01	2'-0"	8'-0"	8'-0"	7-#7	7-#7	7-#5	7-#5	#4 @ 18" O.C. E.W.	-
F02	2'-0"	9'-0"	9'-0"	8-#7	8-#7	8-#5	8-#5	#4 @ 18" O.C. E.W.	-
F03	2'-0"	10'-0"	10'-0"	9-#7	9-#7	9-#5	9-#5	#4 @ 18" O.C. E.W.	-
F04	2'-0"	11'-0"	11'-0"	10-#8	10-#8	10-#5	10-#5	#4 @ 18" O.C. E.W.	-
F05	2'-3"	12'-0"	12'-0"	11-#8	11-#8	12-#5	12-#5	#4 @ 18" O.C. E.W.	-
F06	2'-6"	13'-0"	13'-0"	13-#8	13-#8	13-#5	13-#5	#4 @ 18" O.C. E.W.	-
F08	2'-0"	SEE PLAN	SEE PLAN	#6 @ 12" O.C.	#6 @ 12" O.C.	#5 @ 12" O.C.	#6 @ 12" O.C.	#4 @ 18" O.C. E.W.	-
WF1	2'-0"	CONT.	3'-0"	3-#6	#6 @ 12" O.C.	3-#5	#5 @ 12" O.C.	#4 @ 18" O.C.	TYP. WALL FOOTING U.O.N.
WF2	2'-0"	CONT.	3'-6"	4-#6	#6 @ 12" O.C.	4-#5	#5 @ 12" O.C.	#4 @ 18" O.C.	TYP. WALL FOOTING U.O.N.
WF3	2'-0"	CONT.	6'-0"	6-#6	#6 @ 12" O.C.	6-#5	#5 @ 12" O.C.	#4 @ 18" O.C.	TYP. WALL FOOTING U.O.N.
WF4	2'-0"	CONT.	SEE PLAN	#6 @ 12" O.C.	#6 @ 12" O.C.	#5 @ 12" O.C.	#5 @ 12" O.C.	#4 @ 18" O.C.	TYP. WALL FOOTING U.O.N.

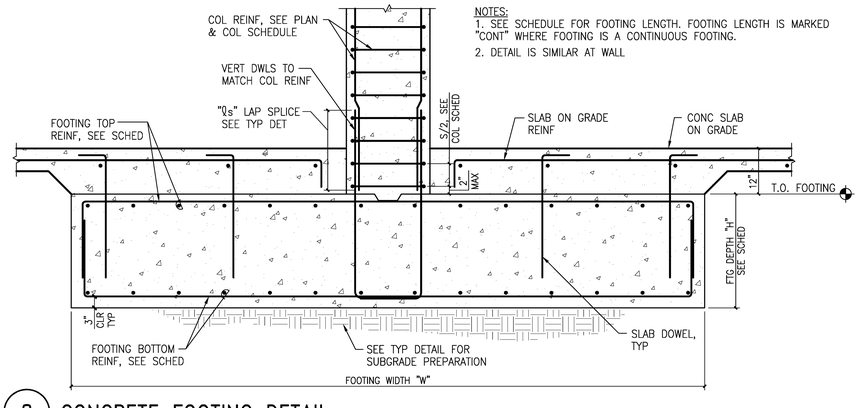

NOTES:
1. SEE SCHEDULE FOR FOOTING LENGTH. FOOTING LENGTH IS MARKED "CONT" WHERE FOOTING IS A CONTINUOUS FOOTING.
2. DETAIL IS SIMILAR AT WALL

8 CONCRETE FOOTING DETAIL
N.T.S.

© WWCOT 2006

WWCOT
Widom Wein Cohen O'Leary Terasawa
3130 Wilshire Boulevard
Sixth Floor
Santa Monica, California 90403
T (310) 828-0040
F (310) 453-9432
www.wwcot.com
Inland Empire
Palm Springs
Moorpark
Shanghai, China

STRUCTURAL FOCUS
1005 West 190th Street
Gardena, California 90248
Tel: 310.323.9924
Fax: 310.323.9925

REGISTERED PROFESSIONAL ENGINEER DAVID W. COCHRAN No. S3005 Exp. 6/30/08 STRUCTURAL STATE OF CALIFORNIA

Building Department Submittal: June 1, 2007
Issued For Bid:
Issued For Construction: January 29, 2008

RECEIVED 10:56 am, Apr 21, 2008 FRAMEMAX

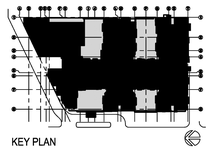

KEY PLAN

Project:
Jewish Home for The Aging
FOUNTAINVIEW AT EISENBERG VILLAGE
6440 Wilbur Ave
Reseda, CA. 91335
JEWISH HOME
JEWISH HOME FOR THE AGING
18855 Victory Blvd.
Reseda, CA 91335
Project Number: 05097

CONCRETE DETAILS

Date: 1/29/2008
Drawn By: ENG Studios
Checked By: RK

S5.01
Sheet No.

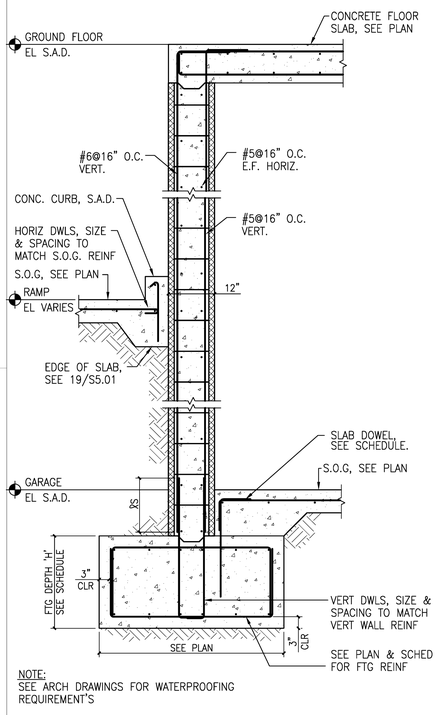

NOTE:
SEE ARCH DRAWINGS FOR WATERPROOFING REQUIREMENT'S

14 WALL SECTION
N.T.S.

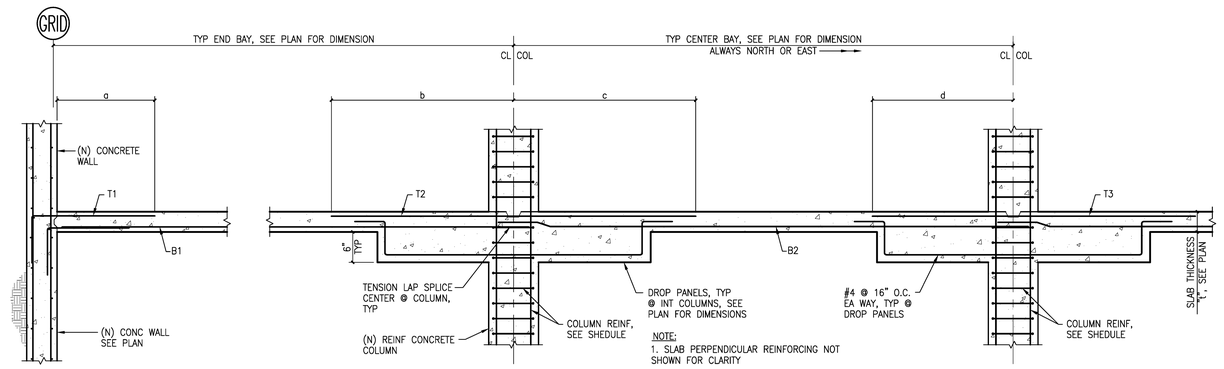

NOTE:
1. SLAB PERPENDICULAR REINFORCING NOT SHOWN FOR CLARITY

2. REFER TO SCHEDULES ON S5.03 FOR REINFORCING INFORMATION

9 TYPICAL SLAB REINFORCEMENT DETAIL AT COLUMN STRIP
1/2"=1'-0"

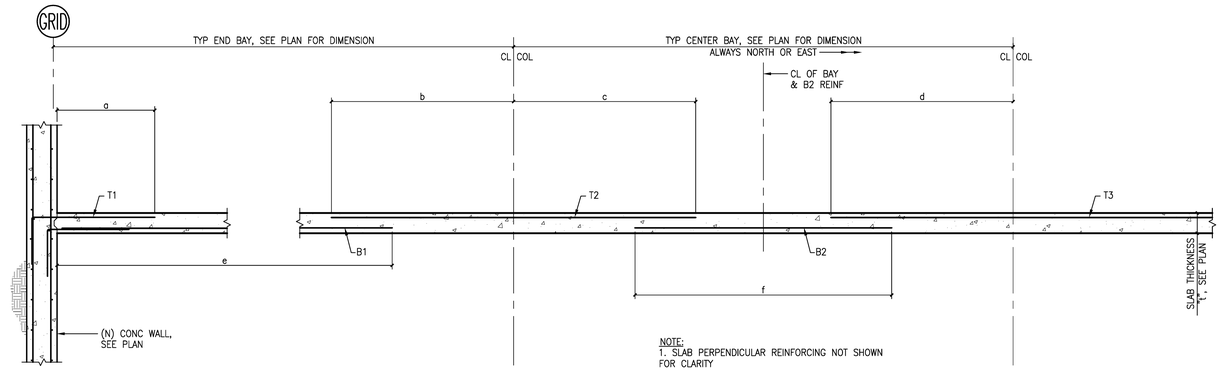

NOTE:
1. SLAB PERPENDICULAR REINFORCING NOT SHOWN FOR CLARITY

2. REFER TO SCHEDULES ON S5.03 FOR REINFORCING INFORMATION

10 TYPICAL SLAB REINFORCEMENT DETAIL AT MIDDLE STRIP
1/2"=1'-0"

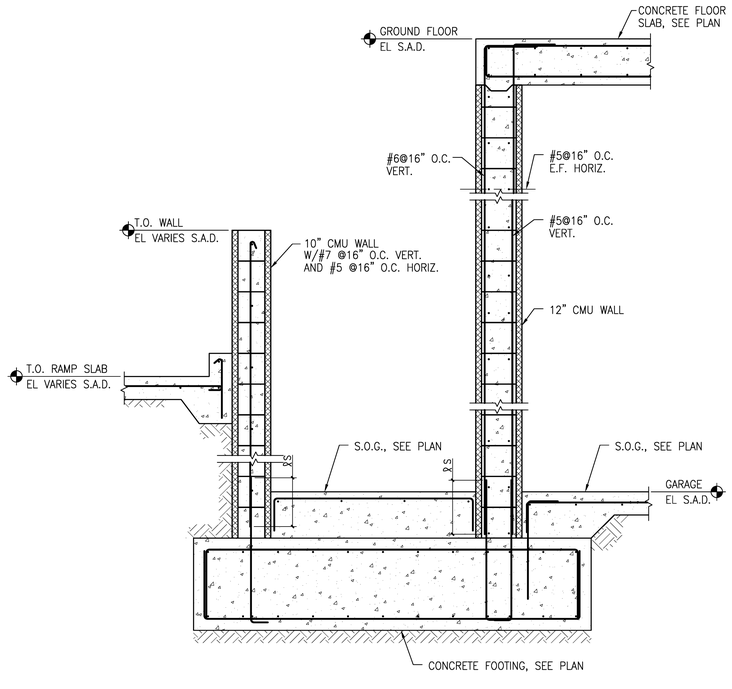

20 WALL SECTION
N.T.S.

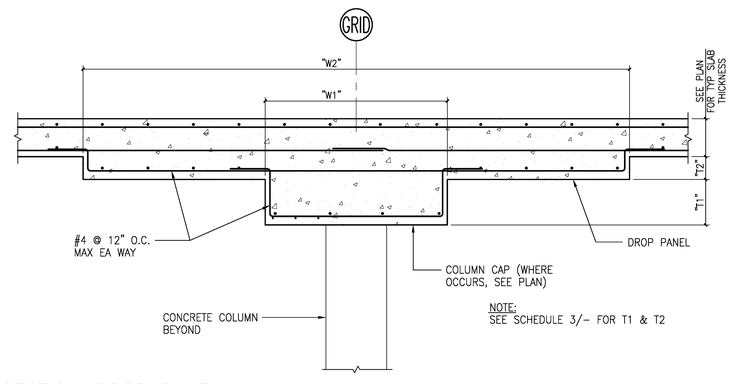

NOTE:
SEE SCHEDULE 3/- FOR T1 & T2

11 SECTION-DROP PANEL
3/4"=1'-0"

DROP PANEL MARK	COLUMN CAP SQUARE WIDTH, W1	DROP PANEL SQUARE WIDTH, W2	THK COL CAP T1	THK DROP PANEL T2	COMMENTS
D1	NONE	13'-0"	N/A	12"	TYPICAL U.O.N
D2	NONE	13'-0"	N/A	14"	TYPICAL U.O.N
D3					
D4					

NOTE:
1. COLUMN CAPS AND DROP PANELS ARE SQUARE AND CENTERED ON COLUMN U.O.N.

3 COLUMN DROP PANEL SCHEDULE

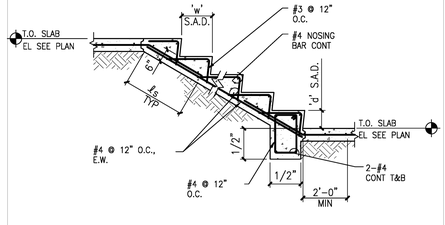

NOTE:
SEE ARCHITECTURAL DRAWINGS FOR STAIR DIMENSIONS, INSERTS, AND OTHER INFORMATION NOT SHOWN.

12 TYPICAL CONCRETE STAIRS ON GRADE
N.T.S.

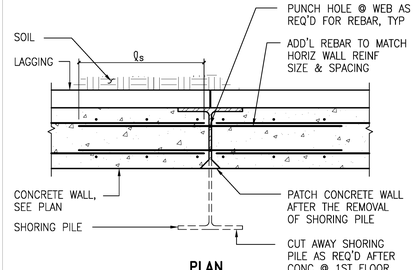

PLAN

NOTES:
1. SEE TYPICAL CONC DETAILS FOR REINF AT SLAB OPENING FOR SHORING PILE BLOCKOUT
2. S.A.D. FOR WATERPROOFING REQUIREMENTS

8 SHORING
PILE IN BASEMENT WALL

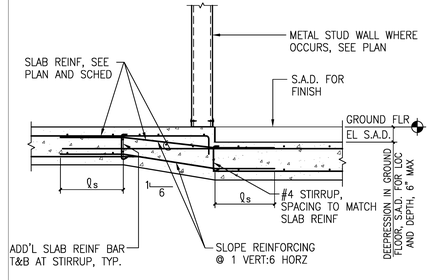

4 TYPICAL
STEP IN SLAB AT DEPRESSION
3/4"=1'-0"

© WWCOT 2006

WWC OT
Widom Wein Cohen O'Leary Terasawa

3130 Wilshire Boulevard
Sixth Floor
Santa Monica, California 90403
T (310) 828-0040
F (310) 453-9432
www.wwcot.com

Inland Empire
Palm Springs
Moorpark
Shanghai, China

STRUCTURAL FOCUS
1005 WEST 190TH STREET
GARDENA, CALIFORNIA 90248
TEL: 310.323.9924
FAX: 310.323.9925

REGISTERED PROFESSIONAL ENGINEER DAVID W. COCHRAN No. S3005 Exp. 6/30/08 STRUCTURAL STATE OF CALIFORNIA

Building Department Submittal: June 1, 2007
Issued For Bid:
Issued For Construction: January 29, 2008

RECEIVED 10:56 am, Apr 21, 2008 FRAMEMAX

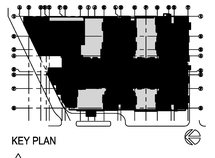

KEY PLAN

Project:
Jewish Home for The Aging
FOUNTAINVIEW AT EISENBERG VILLAGE
6440 Wilbur Ave
Reseda, CA. 91335

JEWISH HOME
JEWISH HOME FOR THE AGING
18855 Victory Blvd.
Reseda, CA 91335
Project Number: 05097

CONCRETE DETAILS

Date: 1/29/2008
Drawn By: ENG Studios
Checked By: RK

S5.02
Sheet No.

Strip ID	Bay Type	T1	a (ft)	B1	e (ft)	T2	b	c	B2	f	T3	d	Notes:
C-G2a	End	15 #6	16.17	14 #6	CONT	-	-	-	-	-	-	-	
C-G2a.5	Center	-	-	-	-	18 #6	18.17	18.17	14 #6	CONT	-	-	
C-G2b	Center	-	-	-	-	16 #6	18.17	18.17	10 #6	CONT	-	-	
C-G2c	Center	-	-	-	-	14 #6	18.17	18.17	10 #6	CONT	-	-	
C-G2d	Center	-	-	-	-	14 #6	18.17	18.17	10 #6	CONT	-	-	
C-G2e	Center	-	-	-	-	17 #6	18.17	18.17	13 #6	CONT	-	-	
C-G2f	Center	-	-	-	-	23 #6	18.17	18.17	12 #6	CONT	-	-	
C-G2g	Center	-	-	-	-	19 #6	18.17	18.17	10 #6	CONT	-	-	
C-G2h	Center	-	-	-	-	17 #6	18.17	18.17	10 #6	CONT	-	-	
C-G2i	Center	-	-	-	-	17 #6	18.17	18.17	11 #6	CONT	-	-	
C-G2j	Center	-	-	-	-	27 #6	18.17	18.17	18 #6	CONT	-	-	
C-G2k	End	26 #6	14.17	11 #6	CONT	24 #6	18.17	-	-	-	-	-	
C-G3b	End	24 #6	14.17	29 #6	CONT	-	-	-	-	-	-	-	
C-G3c	Center	-	-	-	-	32 #6	18.17	18.17	14 #6	CONT	-	-	
C-G3d	Center	-	-	-	-	18 #6	18.17	18.17	14 #6	CONT	-	-	
C-G3e	Center	-	-	-	-	27 #6	18.17	18.17	29 #6	CONT	-	-	
C-G3f	Center	-	-	-	-	33 #6	18.17	18.17	25 #6	CONT	-	-	
C-G3g	Center	-	-	-	-	33 #6	18.17	18.17	17 #6	CONT	-	-	
C-G3h	Center	-	-	-	-	24 #6	18.17	18.17	14 #6	CONT	-	-	
C-G3i	Center	-	-	-	-	23 #6	18.17	18.17	18 #6	CONT	-	-	
C-G3j	Center	-	-	-	-	38 #6	18.17	18.17	26 #6	CONT	-	-	
C-G3k	End	37 #6	14.17	13 #6	CONT	33 #6	18.17	-	-	-	-	-	
C-G4b	End	54 #6	14.17	44 #6	CONT	-	-	-	-	-	-	-	
C-G4c	Center	-	-	-	-	34 #6	18.17	18.17	46 #6	CONT	-	-	
C-G4d	Center	-	-	-	-	40 #6	18.17	18.17	20 #6	CONT	-	-	
C-G4e	Center	-	-	-	-	25 #6	18.17	18.17	16 #6	CONT	-	-	
C-G4f	Center	-	-	-	-	46 #6	18.17	18.17	46 #6	CONT	-	-	
C-G4g	Center	-	-	-	-	46 #6	18.17	18.17	41 #6	CONT	-	-	
C-G4h	Center	-	-	-	-	34 #6	18.17	18.17	17 #6	CONT	-	-	
C-G4i	Center	-	-	-	-	30 #6	18.17	18.17	19 #6	CONT	-	-	
C-G4j	Center	-	-	-	-	40 #6	18.17	18.17	25 #6	CONT	-	-	
C-G4k	End	35 #6	14.17	13 #6	CONT	31 #6	18.17	-	-	-	-	-	
C-G5a.5	End	14 #6	14.17	8 #6	CONT	-	-	-			-	-	
C-G5b	Center	-	-	-	-	15 #6	-	18.17	27 #6	CONT	-	-	
C-G5c	Center	-	-	-	-	35 #6	18.17	18.17	25 #6	CONT	-	-	
C-G5d	Center	-	-	-	-	31 #6	18.17	18.17	20 #6	CONT	-	-	
C-G5e	Center	-	-	-	-	24 #6	18.17	18.17	13 #6	CONT	-	-	
C-G5f	Center	-	-	-	-	31 #6	18.17	18.17	19 #6	CONT	-	-	
C-G5g	Center	-	-	-	-	33 #6	18.17	18.17	18 #6	CONT	-	-	
C-G5h	Center	-	-	-	-	38 #6	18.17	18.17	42 #6	CONT	-	-	
C-G5i	Center	-	-	-	-	45 #6	18.17	18.17	40 #6	CONT	-	-	
C-G5j	Center	-	-	-	-	37 #6	18.17	18.17	36 #6	CONT	-	-	
C-G5k	End	24 #6	14.17	19 #6	CONT	37 #6	18.17	-	-	-	-	-	
C-G6b	End	12 #6	14.17	23 #6	CONT	-	-	-	-	-	-	-	
C-G6c	Center	-	-	-	-	42 #6	18.17	18.17	29 #6	CONT	-	-	
C-G6d	Center	-	-	-	-	43 #6	18.17	18.17	15 #6	CONT	-	-	
C-G6e	Center	-	-	-	-	27 #6	18.17	18.17	20 #6	CONT	-	-	
C-G6f	Center	-	-	-	-	40 #6	18.17	18.17	37 #6	CONT	-	-	
C-G6g	Center	-	-	-	-	39 #6	18.17	18.17	21 #6	CONT	-	-	
C-G6h	Center	-	-	-	-	34 #6	18.17	18.17	17 #6	CONT	-	-	
C-G6i	Center	-	-	-	-	35 #6	18.17	18.17	20 #6	CONT	-	-	
C-G6j	Center	-	-	-	-	39 #6	18.17	18.17	26 #6	CONT	-	-	
C-G6k	End	37 #6	14.17	18 #6	CONT	37 #6	18.17	-	-	-	-	-	
C-G7b	End	34 #6	14.17	19 #6	CONT	-	-	-	-	-	-	-	
C-G7c	Center	-	-	-	-	37 #6	18.17	18.17	35 #6	CONT	-	-	Hook T2 bars into beam
C-G7d	Center	-	-	-	-	51 #6	18.17	18.17	16 #6	CONT	-	-	
C-G7e	Center	-	-	-	-	32 #6	18.17	18.17	46 #6	CONT	-	-	
C-G7f	Center	-	-	-	-	34 #6	18.17	18.17	25 #6	CONT	-	-	
C-G7g	Center	-	-	-	-	34 #6	18.17	18.17	13 #6	CONT	-	-	
C-G7h	Center	-	-	-	-	26 #6	18.17	18.17	13 #6	CONT	-	-	
C-G7i	Center	-	-	-	-	26 #6	18.17	18.17	41 #6	CONT	-	-	
C-G7j	Center	-	-	-	-	20 #6	18.17	18.17	22 #6	CONT	-	-	
C-G7k	End	25 #6	14.17	11 #6	CONT	25 #6	18.17	-	-	-	-	-	
M-G1a	End	15 #6	16.17	13 #6	CONT	-	-	-	-	-	-	-	
M-G1a.5	Center	-	-	-	-	17 #6	18.17	18.17	19 #6	CONT	-	-	
M-G1b	Center	-	-	-	-	17 #6	18.17	18.17	13 #6	CONT	-	-	
M-G1c	Center	-	-	-	-	17 #6	18.17	18.17	12 #6	CONT	-	-	
M-G1d	Center	-	-	-	-	14 #6	18.17	18.17	11 #6	CONT	-	-	
M-G1e	Center	-	-	-	-	16 #6	18.17	18.17	13 #6	CONT	-	-	
M-G1f	Center	-	-	-	-	22 #6	18.17	18.17	13 #6	CONT	-	-	
M-G1g	Center	-	-	-	-	22 #6	18.17	18.17	12 #6	CONT	-	-	Hook 14 T2, B2 bars into CMU wall
M-G1h	Center	-	-	-	-	15 #6	18.17	18.17	11 #6	CONT	-	-	
M-G1i	Center	-	-	-	-	15 #6	18.17	18.17	12 #6	CONT	-	-	
M-G1j	Center	-	-	-	-	23 #6	18.17	18.17	28 #6	CONT	-	-	
M-G1k	End	17 #6	14.17	14 #6	CONT	23 #6	18.17	-	-	-	-	-	
M-G2b	End	14 #6	14.17	18 #6	CONT	-	-	-	-	-	-	-	Hook T2 bars into CMU wall
M-G2c	Center	-	-	-	-	17 #6	18.17	18.17	14 #6	CONT	-	-	
M-G2d	Center	-	-	-	-	14 #6	18.17	18.17	14 #6	CONT	-	-	
M-G2e	Center	-	-	-	-	25 #6	18.17	18.17	38 #6	CONT	-	-	
M-G2f	Center	-	-	-	-	16 #6	18.17	18.17	36 #6	CONT	-	-	
M-G2g	Center	-	-	-	-	19 #6	18.17	18.17	21 #6	CONT	-	-	
M-G2h	Center	-	-	-	-	17 #6	18.17	18.17	14 #6	CONT	-	-	
M-G2i	Center	-	-	-	-	23 #6	18.17	18.17	33 #6	CONT	-	-	
M-G2j	Center	-	-	-	-	22 #6	18.17	18.17	32 #6	CONT	-	-	
M-G2k	End	16 #6	14.17	18 #6	CONT	14 #6	18.17	-	-	-	-	-	
M-G3b	End	19 #6	14.17	37 #6	CONT	-	-	-	-	-	-	-	
M-G3c	Center	-	-	-	-	24 #6	18.17	18.17	25 #6	CONT	-	-	
M-G3d	Center	-	-	-	-	18 #6	18.17	18.17	14 #6	CONT	-	-	
M-G3e	Center	-	-	-	-	17 #6	18.17	18.17	21 #6	CONT	-	-	
M-G3f	Center	-	-	-	-	22 #6	18.17	18.17	30 #6	CONT	-	-	
M-G3g	Center	-	-	-	-	24 #6	18.17	18.17	22 #6	CONT	-	-	
M-G3h	Center	-	-	-	-	18 #6	18.17	18.17	18 #6	CONT	-	-	
M-G3i	Center	-	-	-	-	17 #6	18.17	18.17	18 #6	CONT	-	-	
M-G3j	Center	-	-	-	-	23 #6	18.17	18.17	37 #6	CONT	-	-	
M-G3k	End	19 #6	14.17	14 #6	CONT	16 #6	18.17	-	-	-	-	-	
M-G4b	End	31 #6	14.17	23 #6	CONT	-	-	-	-	-	-	-	
M-G4c	Center	-	-	-	-	30 #6	18.17	18.17	24 #6	CONT	-	-	
M-G4d	Center	-	-	-	-	22 #6	18.17	18.17	16 #6	CONT	-	-	
M-G4e	Center	-	-	-	-	14 #6	18.17	18.17	24 #6	CONT	-	-	
M-G4f	Center	-	-	-	-	27 #6	18.17	18.17	43 #6	CONT	-	-	
M-G4g	Center	-	-	-	-	20 #6	18.17	18.17	21 #6	CONT	-	-	
M-G4h	Center	-	-	-	-	27 #6	18.17	18.17	27 #6	CONT	-	-	
M-G4i	Center	-	-	-	-	26 #6	18.17	18.17	24 #6	CONT	-	-	
M-G4j	Center	-	-	-	-	21 #6	18.17	18.17	39 #6	CONT	-	-	
M-G4k	End	29 #6	14.17	36 #6	CONT	27 #6	18.17	-	-	-	-	-	Hook 12 T1, B1, T2 bars into CMU wall
M-G5b	End	20 #6	18.17	20 #6	CONT	-	-	-			-	-	
M-G5c	Center	-	-	-	-	20 #6	18.17	18.17	19 #6	CONT	-	-	
M-G5d	Center	-	-	-	-	21 #6	18.17	18.17	16 #6	CONT	-	-	Hook 10 T2, B2 bars into CMU wall
M-G5e	Center	-	-	-	-	18 #6	18.17	18.17	16 #6	CONT	-	-	Hook 10 T2, B2 bars into CMU wall
M-G5f	Center	-	-	-	-	14 #6	18.17	18.17	33 #6	CONT	-	-	
M-G5g	Center	-	-	-	-	24 #6	18.17	18.17	17 #6	CONT	-	-	
M-G5h	Center	-	-	-	-	30 #6	18.17	18.17	31 #6	CONT	-	-	
M-G5i	Center	-	-	-	-	22 #6	18.17	18.17	30 #6	CONT	-	-	
M-G5j	Center	-	-	-	-	18 #6	18.17	18.17	28 #6	CONT	-	-	
M-G5k	End	16 #6	14.17	18 #6	CONT	18 #6	18.17	-	-	-	-	-	
M-G6b	End	57 #6	14.17	49 #6	CONT	-	-	-	-	-	-	-	
M-G6c	Center	-	-	-	-	57 #6	18.17	18.17	36 #6	CONT	-	-	
M-G6d	Center	-	-	-	-	27 #6	18.17	18.17	14 #6	CONT	-	-	
M-G6e	Center	-	-	-	-	16 #6	18.17	18.17	23 #6	CONT	-	-	
M-G6f	Center	-	-	-	-	36 #6	18.17	18.17	53 #6	CONT	-	-	
M-G6g	Center	-	-	-	-	20 #6	18.17	18.17	30 #6	CONT	-	-	
M-G6h	Center	-	-	-	-	19 #6	18.17	18.17	14 #6	CONT	-	-	
M-G6i	Center	-	-	-	-	17 #6	18.17	18.17	26 #6	CONT	-	-	
M-G6j	Center	-	-	-	-	43 #6	18.17	18.17	34 #6	CONT	-	-	
M-G6k	End	16 #6	14.17	22 #6	CONT	23 #6	18.17	-	-	-	-	-	
M-G7c	End	14 #6	14.17	13 #6	CONT	-	-	-	-	-	-	-	
M-G7d	Center	-	-	-	-	12 #6	18.17	18.17	13 #6	CONT	-	-	
M-G7e	Center	-	-	-	-	11 #6	18.17	18.17	13 #6	CONT	-	-	
M-G7f	Center	-	-	-	-	11 #6	18.17	18.17	16 #6	CONT	-	-	
M-G7g	Center	-	-	-	-	14 #6	18.17	18.17	14 #6	CONT	-	-	
M-G7h	Center	-	-	-	-	10 #6	18.17	18.17	11 #6	CONT	-	-	
M-G7i	Center	-	-	-	-	10 #6	18.17	18.17	14 #6	CONT	-	-	
M-G7j	Center	-	-	-	-	10 #6	18.17	18.17	13 #6	CONT	-	-	
M-G7k	End	14 #6	14.17	10 #6	CONT	10 #6	18.17	-	-	-	-	-	

NOTE:
FOR REBAR OVERLAP > l_s, REINFORCING CAN BE CONTINOUS

16 SLAB SCHEDULE
N.T.S.

Strip ID	Bay Type	T1	a (ft)	B1	e (ft)	T2	b	c	B2	f	T3	d	Notes:
C-GA.5 4	End	12 #6	14.17	10 #6	CONT	-	-	-	-	-	-	-	
C-GA.5 3	Center	-	-	-	-	11 #6	20.00	20.00	10 #6	CONT	-	-	Carry T2 bars "b" distance over Beam B01
C-GA.5 2	End	11 #6	14.17	10 #6	CONT	11 #6	20.00	-	-	-	-	-	
C-GB6	End	16 #6	14.17	10 #6	CONT	33 #6	20.00	20.00	10 #6	CONT	-	-	Hook T2, B2 bars into CMU Wall
C-GB4	End	19 #6	14.17	10 #6	CONT	-	-	-	-	-	-	-	
C-GB3	Center	-	-	-	-	25 #6	20.00	20.00	21 #6	CONT	-	-	
C-GB2	End	12 #6	20.67	8 #6	CONT	12 #6	20.00	-	-	-	-	-	
C-GC8	End	18 #6	14.17	9 #6	CONT	-	-	-	-	-	-	-	
C-GC7	Center	-	-	-	-	18 #6	20.00	20.00	15 #6	CONT	-	-	
C-GC6	Center	-	-	-	-	26 #6	20.00	20.00	15 #6	CONT	-	-	
C-GC5	Center	-	-	-	-	31 #6	20.00	20.00	13 #6	CONT	-	-	
C-GC4	Center	-	-	-	-	35 #6	20.00	20.00	19 #6	CONT	-	-	
C-GC3	Center	-	-	-	-	35 #6	20.00	20.00	12 #6	CONT	-	-	
C-GC2	End	14 #6	20.67	14 #6	CONT	14 #6	20.00	-	-	-	-	-	
C-GD8	End	34 #6	20.67	19 #6	CONT	-	-	-	-	-	-	-	
C-GD7	Center	-	-	-	-	34 #6	20.00	20.00	16 #6	CONT	-	-	
C-GD6	Center	-	-	-	-	41 #6	20.00	20.00	12 #6	CONT	-	-	
C-GD5	Center	-	-	-	-	25 #6	20.00	20.00	14 #6	CONT	-	-	
C-GD4	Center	-	-	-	-	32 #6	20.00	20.00	22 #6	CONT	-	-	
C-GD3	Center	-	-	-	-	30 #6	20.00	20.00	14 #6	CONT	-	-	
C-GD2	End	21 #6	20.67	12 #6	CONT	21 #6	20.00	-	-	-	-	-	
C-GE8	End	24 #6	20.67	12 #6	CONT	-	-	-	-	-	-	-	
C-GE7	Center	-	-	-	-	24 #6	20.00	20.00	15 #6	CONT	-	-	
C-GE6	Center	-	-	-	-	31 #6	20.00	20.00	10 #6	CONT	-	-	Hook T2, B2 bars into CMU wall
C-GE5	Center	-	-	-	-	18 #6	20.00	20.00	16 #6	CONT	-	-	Hook T2, B2 bars into CMU wall
C-GE4	Center	-	-	-	-	29 #6	20.00	20.00	13 #6	CONT	-	-	
C-GE3	Center	-	-	-	-	30 #6	20.00	20.00	15 #6	CONT	-	-	
C-GE2	End	17 #6	20.67	12 #6	CONT	24 #6	20.00	-	-	-	-	-	
C-GF8	End	26 #6	20.67	12 #6	CONT	-	-	-	-	-	-	-	
C-GF7	Center	-	-	-	-	23 #6	20.00	20.00	17 #6	CONT	-	-	
C-GF6	Center	-	-	-	-	36 #6	20.00	20.00	17 #6	CONT	-	-	
C-GF5	Center	-	-	-	-	34 #6	20.00	20.00	16 #6	CONT	-	-	
C-GF4	Center	-	-	-	-	35 #6	20.00	20.00	21 #6	CONT	-	-	
C-GF3	Center	-	-	-	-	38 #6	20.00	20.00	19 #6	CONT	-	-	
C-GF2	End	40 #6	20.67	12 #6	CONT	31 #6	20.00	-	-	-	-	-	
C-GG8	End	25 #6	20.67	17 #6	CONT	-	-	-	-	-	-	-	
C-GG7	Center	-	-	-	-	27 #6	20.00	20.00	17 #6	CONT	-	-	
C-GG6	Center	-	-	-	-	43 #6	20.00	20.00	26 #6	CONT	-	-	
C-GG5	Center	-	-	-	-	47 #6	20.00	20.00	29 #6	CONT	-	-	
C-GG4	Center	-	-	-	-	44 #6	20.00	20.00	18 #6	CONT	-	-	
C-GG3	Center	-	-	-	-	41 #6	20.00	20.00	19 #6	CONT	-	-	
C-GG2	End	40 #6	20.67	8 #6	CONT	34 #6	20.00	-	-	-	-	-	
C-GH8	End	19 #6	20.67	9 #6	CONT	-	-	-	-	-	-	-	
C-GH7	Center	-	-	-	-	20 #6	20.00	20.00	36 #6	CONT	-	-	
C-GH6	Center	-	-	-	-	38 #6	20.00	20.00	37 #6	CONT	-	-	
C-GH5	Center	-	-	-	-	44 #6	20.00	20.00	47 #6	CONT	-	-	
C-GH4	Center	-	-	-	-	36 #6	20.00	20.00	13 #6	CONT	-	-	
C-GH3	Center	-	-	-	-	29 #6	20.00	20.00	20 #6	CONT	-	-	
C-GH2	End	26 #6	20.67	12 #6	CONT	23 #6	20.00	-	-	-	-	-	
C-GI8	End	18 #6	20.67	8 #6	CONT	-	-	-	-	-	-	-	
C-GI7	Center	-	-	-	-	21 #6	20.00	20.00	35 #6	CONT	-	-	
C-GI6	Center	-	-	-	-	40 #6	20.00	20.00	36 #6	CONT	-	-	
C-GI5	Center	-	-	-	-	43 #6	20.00	20.00	45 #6	CONT	-	-	
C-GI4	Center	-	-	-	-	37 #6	20.00	20.00	12 #6	CONT	-	-	
C-GI3	Center	-	-	-	-	25 #6	20.00	20.00	17 #6	CONT	-	-	
C-GI2	End	22 #6	20.67	12 #6	CONT	21 #6	20.00	-	-	-	-	-	
C-GJ8	End	29 #6	20.67	14 #6	CONT	-	-	-	-	-	-	-	
C-GJ7	Center	-	-	-	-	29 #6	20.00	20.00	17 #6	CONT	-	-	
C-GJ6	Center	-	-	-	-	41 #6	20.00	20.00	19 #6	CONT	-	-	
C-GJ5	Center	-	-	-	-	40 #6	20.00	20.00	23 #6	CONT	-	-	
C-GJ4	Center	-	-	-	-	40 #6	20.00	20.00	18 #6	CONT	-	-	
C-GJ3	Center	-	-	-	-	36 #6	20.00	20.00	19 #6	CONT	-	-	
C-GJ2	End	28 #6	20.67	12 #6	CONT	28 #6	20.00	-	-	-	-	-	
C-GK8	End	21 #6	20.67	8 #6	CONT	-	-	-	-	-	-	-	
C-GK7	Center	-	-	-	-	20 #6	20.00	20.00	16 #6	CONT	-	-	
C-GK6	Center	-	-	-	-	29 #6	20.00	20.00	12 #6	CONT	-	-	
C-GK5	Center	-	-	-	-	20 #6	20.00	20.00	11 #6	CONT	-	-	Hook T2, B2 bars into CMU wall
C-GK4	Center	-	-	-	-	21 #6	20.00	20.00	17 #6	CONT	-	-	Hook T2, B2 bars into CMU wall
C-GK3	Center	-	-	-	-	28 #6	20.00	20.00	15 #6	CONT	-	-	
C-GK2	End	28 #6	20.67	11 #6	CONT	25 #6	20.00	-	-	-	-	-	
M-GA3	End	10 #6	14.17	15 #6	CONT	-	-	-	-	-	-	-	
M-GA2	End	-	-	-	-	10 #6	20.00	20.00	15 #6	CONT			
M-GA.5 4	End	14 #6	14.17	30 #6	CONT	-	-	-	-	-	-	-	
M-GA.5 3	Center	-	-	-	-	33 #6	20.00	20.00	23 #6	CONT	-	-	
M-GA.5 2	End	28 #6	20.67	38 #6	CONT	28 #6	20.00	-	-	-	-	-	
M-GB7	End	17 #6	14.17	18 #6	CONT	-	-	-	-	-	-	-	
M-GB6	Center	-	-	-	-	22 #6	20.00	20.00	26 #6	CONT	-	-	Hook half T2, B2 bars into CMU wall
M-GB5	Center	-	-	-	-	25 #6	20.00	20.00	15 #6	CONT	-	-	
M-GB4	Center	-	-	-	-	31 #6	20.00	20.00	27 #6	CONT	-	-	Hook half T2, B2 bars into CMU wall
M-GB3	Center	-	-	-	-	19 #6	20.00	20.00	14 #6	CONT	-	-	
M-GB2	End	16 #6	14.17	17 #6	CONT	16 #6	20.00	-	-	-	-	-	
M-GC8	End	14 #6	20.67	10 #6	CONT	-	-	-	-	-	-	-	
M-GC7	Center	-	-	-	-	14 #6	20.00	20.00	18 #6	CONT	-	-	
M-GC6	Center	-	-	-	-	31 #6	20.00	20.00	17 #6	CONT	-	-	
M-GC5	Center	-	-	-	-	19 #6	20.00	20.00	18 #6	CONT	-	-	
M-GC4	Center	-	-	-	-	39 #6	20.00	20.00	33 #6	CONT	-	-	
M-GC3	Center	-	-	-	-	19 #6	20.00	20.00	12 #6	CONT	-	-	
M-GC2	End	12 #6	20.67	12 #6	CONT	12 #6	20.00	-	-	-	-	-	
M-GD8	End	16 #6	20.67	12 #6	CONT	-	-	-	-	-	-	-	
M-GD7	Center	-	-	-	-	16 #6	20.00	20.00	15 #6	CONT	-	-	
M-GD6	Center	-	-	-	-	17 #6	20.00	20.00	17 #6	CONT	-	-	
M-GD5	Center	-	-	-	-	21 #6	20.00	20.00	12 #6	CONT	-	-	
M-GD4	Center	-	-	-	-	19 #6	20.00	20.00	14 #6	CONT	-	-	
M-GD3	Center	-	-	-	-	16 #6	20.00	20.00	14 #6	CONT	-	-	
M-GD2	End	13 #6	20.67	12 #6	CONT	13 #6	20.00	-	-	-	-	-	
M-GE8	End	12 #6	20.67	10 #6	CONT	-	-	-	-	-	-	-	
M-GE7	Center	-	-	-	-	14 #6	20.00	20.00	14 #6	CONT	-	-	
M-GE6	Center	-	-	-	-	14 #6	20.00	20.00	19 #6	CONT	-	-	
M-GE5	Center	-	-	-	-	19 #6	20.00	20.00	18 #6	CONT	-	-	
M-GE4	Center	-	-	-	-	21 #6	20.00	20.00	21 #6	CONT	-	-	
M-GE3	Center	-	-	-	-	27 #6	20.00	20.00	30 #6	CONT	-	-	
M-GE2	End	16 #6	20.67	12 #6	CONT	18 #6	20.00	-	-	-	-	-	
M-GF8	End	35 #6	20.67	22 #6	CONT	-	-	-	-	-	-	-	
M-GF7	Center	-	-	-	-	35 #6	20.00	20.00	37 #6	CONT	-	-	
M-GF6	Center	-	-	-	-	32 #6	20.00	20.00	38 #6	CONT	-	-	
M-GF5	Center	-	-	-	-	34 #6	20.00	20.00	28 #6	CONT	-	-	
M-GF4	Center	-	-	-	-	21 #6	20.00	20.00	18 #6	CONT	-	-	
M-GF3	Center	-	-	-	-	34 #6	20.00	20.00	25 #6	CONT	-	-	
M-GF2	End	24 #6	20.67	32 #6	CONT	23 #6	20.00	-	-	-	-	-	
M-GG8	End	25 #6	20.67	12 #6	CONT	-	-	-	-	-	-	-	
M-GG7	Center	-	-	-	-	23 #6	20.00	20.00	19 #6	CONT	-	-	
M-GG6	Center	-	-	-	-	29 #6	20.00	20.00	24 #6	CONT	-	-	
M-GG5	Center	-	-	-	-	24 #6	20.00	20.00	28 #6	CONT	-	-	
M-GG4	Center	-	-	-	-	38 #6	20.00	20.00	16 #6	CONT	-	-	
M-GG3	Center	-	-	-	-	18 #6	20.00	20.00	22 #6	CONT	-	-	
M-GG2	End	18 #6	20.67	16 #6	CONT	14 #6	20.00	-	-	-	-	-	
M-GH8	End	20 #6	20.67	14 #6	CONT	-	-	-	-	-	-	-	
M-GH7	Center	-	-	-	-	20 #6	20.00	20.00	16 #6	CONT	-	-	
M-GH6	Center	-	-	-	-	29 #6	20.00	20.00	30 #6	CONT	-	-	
M-GH5	Center	-	-	-	-	29 #6	20.00	20.00	30 #6	CONT	-	-	
M-GH4	Center	-	-	-	-	21 #6	20.00	20.00	12 #6	CONT	-	-	
M-GH3	Center	-	-	-	-	16 #6	20.00	20.00	16 #6	CONT	-	-	
M-GH2	End	16 #6	20.67	12 #6	CONT	13 #6	20.00	-	-	-	-	-	
M-GI8	End	12 #6	20.67	12 #6	CONT	-	-	-	-	-	-	-	
M-GI7	Center	-	-	-	-	10 #6	20.00	20.00	16 #6	CONT	-	-	
M-GI6	Center	-	-	-	-	30 #6	20.00	20.00	26 #6	CONT	-	-	
M-GI5	Center	-	-	-	-	33 #6	20.00	20.00	25 #6	CONT	-	-	
M-GI4	Center	-	-	-	-	22 #6	20.00	20.00	17 #6	CONT	-	-	
M-GI3	Center	-	-	-	-	19 #6	20.00	20.00	22 #6	CONT	-	-	
M-GI2	End	16 #6	20.67	12 #6	CONT	16 #6	20.00	-	-	-	-	-	
M-GJ8	End	14 #6	20.67	12 #6	CONT	-	-	-	-	-	-	-	
M-GJ7	Center	-	-	-	-	24 #6	20.00	20.00	28 #6	CONT	-	-	
M-GJ6	Center	-	-	-	-	17 #6	20.00	20.00	28 #6	CONT	-	-	
M-GJ5	Center	-	-	-	-	37 #6	20.00	20.00	29 #6	CONT	-	-	
M-GJ4	Center	-	-	-	-	29 #6	20.00	20.00	30 #6	CONT	-	-	
M-GJ3	Center	-	-	-	-	27 #6	20.00	20.00	29 #6	CONT	-	-	
M-GJ2	End	32 #6	20.67	33 #6	CONT	23 #6	20.00	-	-	-	-	-	
M-GK8	End	17 #6	20.67	10 #6	CONT	-	-	-	-	-	-	-	
M-GK7	Center	-	-	-	-	20 #6	20.00	20.00	14 #6	CONT	-	-	
M-GK6	Center	-	-	-	-	22 #6	20.00	20.00	11 #6	CONT	-	-	
M-GK5	Center	-	-	-	-	13 #6	20.00	20.00	19 #6	CONT	-	-	
M-GK4	Center	-	-	-	-	22 #6	20.00	20.00	17 #6	CONT	-	-	
M-GK3	Center	-	-	-	-	26 #6	20.00	20.00	15 #6	CONT	-	-	
M-GK2	End	24 #6	20.67	14 #6	CONT	24 #6	20.00	-	-	-	-	-	

8 SLAB SCHEDULE
N.T.S.

© WWCOT 2006

WWC OT
Widom Wein Cohen O'Leary Terasawa

3130 Wilshire Boulevard
Sixth Floor
Santa Monica, California 90403
T (310) 828-0040
F (310) 453-9432
www.wwcot.com

Inland Empire
Palm Springs
Moorpark
Shanghai, China

STRUCTURAL FOCUS
1005 West 190th Street
Gardena, California 90248
Tel: 310.323.9924
Fax: 310.323.9925

REGISTERED PROFESSIONAL ENGINEER
DAVID W. COCKERHAM
No. S3005
Exp. 6/30/08
STRUCTURAL
STATE OF CALIFORNIA

Building Department Submittal: June 1, 2007

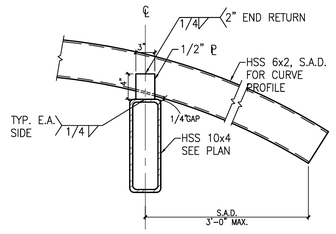

17 ENTRANCE CANOPY DETAIL
N.T.S.

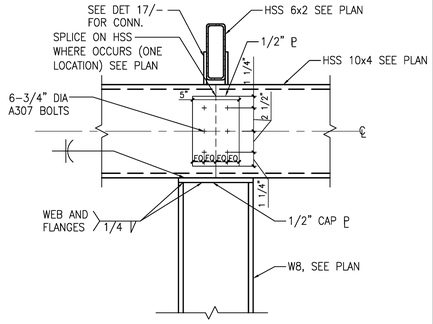

13 ENTRANCE CANOPY DETAIL
N.T.S.

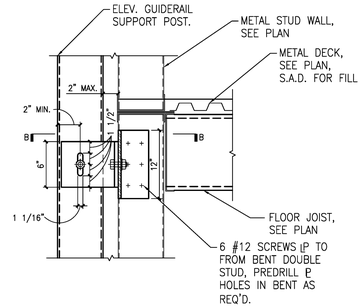

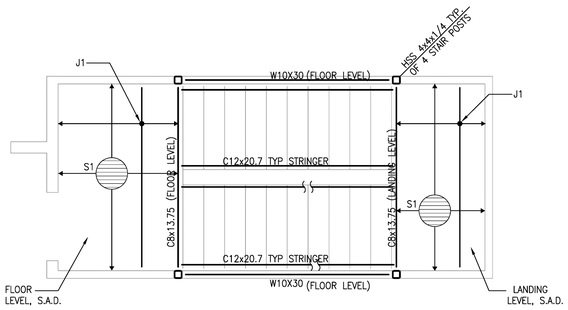

TYPICAL STAIR TYPE A

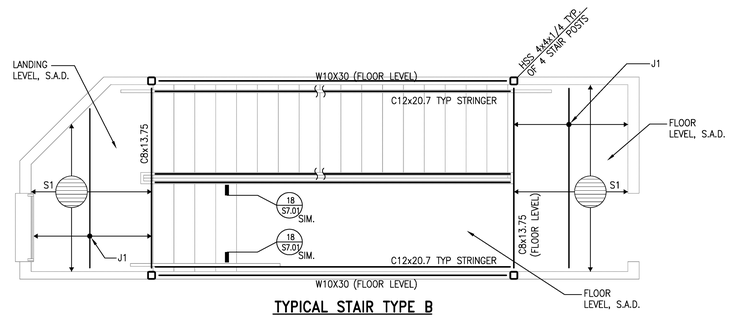

TYPICAL STAIR TYPE B

NOTE: STAIR TREADS TO BE DESIGN–BUILD BY CONTRACTOR

6 TYPICAL STAIR FRAMING
3/8"=1'–0"

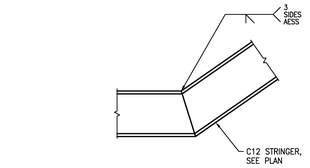

18 STAIR MITER CONNECTION
1"=1'–0"

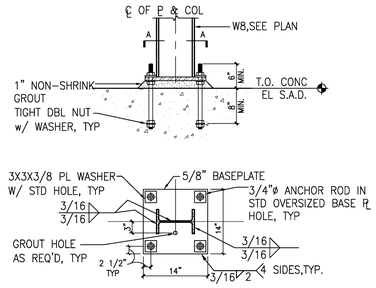

SECTION A–A

14 BASE PLATE FOR ENTRANCE CANOPY COLUMN
N.T.S.

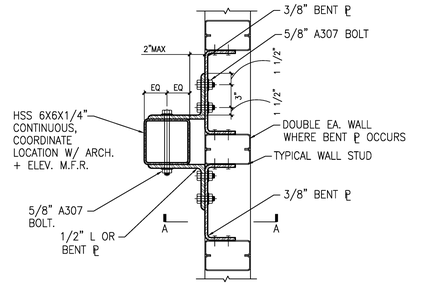

10 TYPICAL ELEVATOR GUIDERAIL SUPPORT POST
N.T.S.

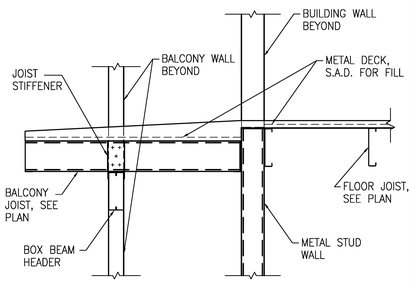

19 ENTRY BALCONY DETAIL
N.T.S.

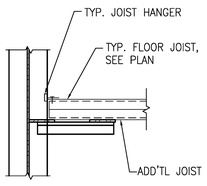

SECTION A–A

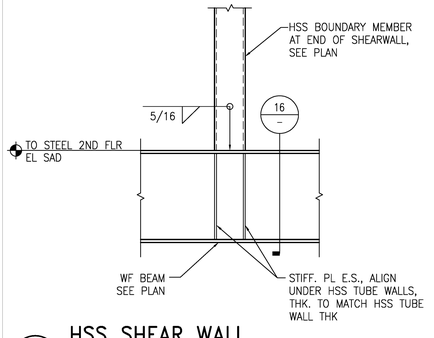

11 HSS SHEAR WALL BOUNDARY TO WF BEAM
N.T.S.

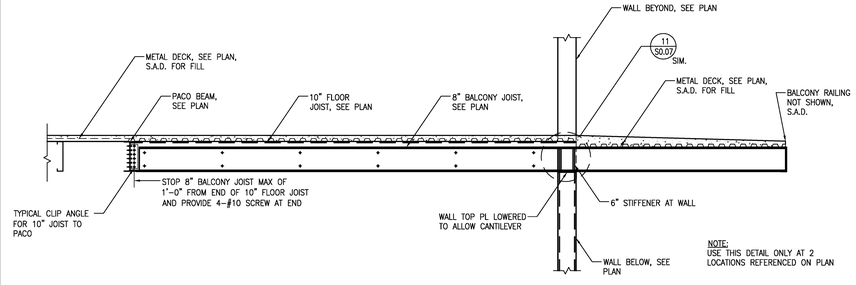

NOTE: USE THIS DETAIL ONLY AT 2 LOCATIONS REFERENCED ON PLAN

7 CANTILEVER BALCONY
N.T.S.

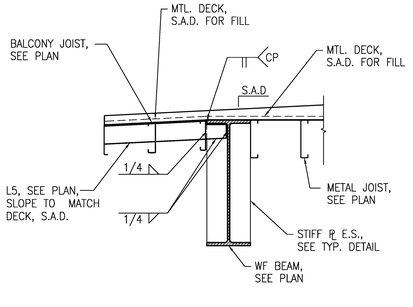

20 ENTRY BALCONY DETAIL
N.T.S.

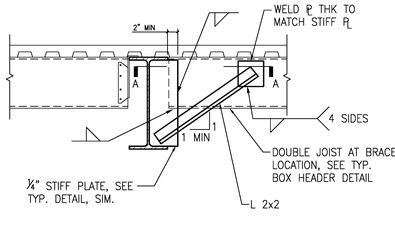

DETAIL

NOTE:
SEE PLAN AND DETAIL 11 FOR LOCATIONS WHERE BOTTOM FLANGE BRACES ARE REQUIRED

16 WF BEAM BOTTOM FLANGE BRACING
N.T.S.

BOUNDARY MEMBER MARK OR COL SECTION	T. BASE PL	N STUDS
D	1 1/4"	4
E	1 1/2"	4
F	2"	8
G	2 1/2"	8

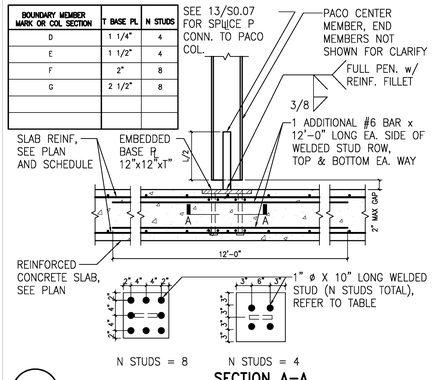

SECTION A–A

12 DETAIL
N.T.S.

8 NOT USED
N.T.S.

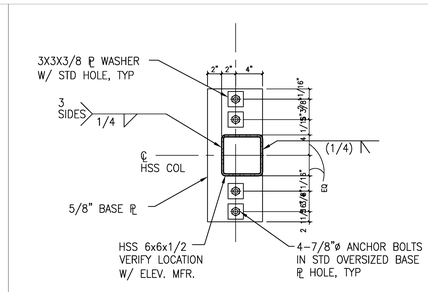

NOTE:
PROVIDE 1 1/2" NON–SHRINK GROUT, SEE DETAIL 15/–, SIM.

4 ELEVATOR GUIDERAIL SUPPORT BASE PLATE
1"=1'–0"

© WWCOT 2006

WWC OT
Widom Wein Cohen O'Leary Terasawa
3130 Wilshire Boulevard
Sixth Floor
Santa Monica, California 90403
T (310) 828-0040
F (310) 453-9432
www.wwcot.com
Inland Empire
Palm Springs
Moorpark
Shanghai, China

STRUCTURAL FOCUS
1005 West 190th Street
Gardena, California 90248
Tel: 310.323.9924
Fax: 310.323.9925

REGISTERED PROFESSIONAL ENGINEER DAVID W. COOLEY No. S3005 Exp. 6/30/08 STRUCTURAL STATE OF CALIFORNIA

Building Department Submittal: June 1, 2007
Issued For Bid:
Issued For Construction: January 29, 2008

RECEIVED 10:56 am, Apr 21, 2008 FRAMEMAX

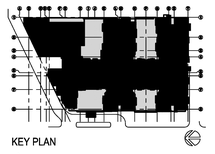

Project:
Jewish Home for The Aging
FOUNTAINVIEW AT EISENBERG VILLAGE
6440 Wilbur Ave
Reseda, CA. 91335
JEWISH HOME
JEWISH HOME FOR THE AGING
18855 Victory Blvd.
Reseda, CA 91335
Project Number: 05097

STEEL DETAILS
Date: 1/29/2008
Drawn By: ENG Studios
Checked By: RK

S7.01
Sheet No.