NATIONAL STANDARD
OF THE PEOPLE'S REPUBLIC OF CHINA
中华人民共和国国家标准

Code for Design of Steel Structures

钢结构设计规范

GB 50017—2003

（英文版）

Beijing 2003

NATIONAL STANDARD
OF THE PEOPLE'S REPUBLIC OF CHINA
中华人民共和国国家标准

Code for Design of Steel Structures

钢结构设计规范

GB 50017—2003

(英文版)

Chief Editorial Department: Ministry of Construction of the People's Republic of China
Approval Department: Ministry of Construction of the People's Republic of China
Executive Date: December 1, 2003

China Architecture & Building Press
中国建筑工业出版社
Beijing 2003

图书在版编目(CIP)数据

钢结构设计规范 GB 50017—2003(英文版)/中国工程建设标准化协会组织翻译 .—北京:中国建筑工业出版社,2006

ISBN 7-112-08409-1

Ⅰ.钢… Ⅱ.中… Ⅲ.钢结构-设计规范-中国-英文 Ⅳ.TU391.04-65

中国版本图书馆 CIP 数据核字(2006)第 066478 号

NATIONAL STANDARD
OF THE PEOPLE'S REPUBLIC OF CHINA
中华人民共和国国家标准

Code for Design of Steel Structures
钢 结 构 设 计 规 范

GB 50017—2003
(英文版)

*

中国建筑工业出版社出版、发行(北京西郊百万庄)
新 华 书 店 经 销
北京密云红光制版公司制版
北京云浩印刷有限责任公司印刷

*

开本:787×1092 毫米 1/16 印张:16¼ 字数:400 千字
2006 年 9 月第一版 2006 年 9 月第一次印刷
印数:1—500 册 定价:**1800.00** 元

ISBN 7-112-08409-1
(15073)

版权所有 翻印必究
如有印装质量问题,可寄本社退换
(邮政编码 100037)

本社网址:http://www.cabp.com.cn
网上书店:http://www.china-building.com.cn

Bulletin of Ministry of Construction of the People's Republic of China

Bulletin No. 147

Bulletin of Promulgation for the National Standard "Code for Design of Steel Structures"

"Code for Design of Steel Structures" has been approved as a national standard with a serial number of GB 50017—2003, and it shall come into force upon December 1, 2003. Herein, Clauses 1.0.5, 3.1.2, 3.1.3, 3.1.4, 3.1.5, 3.2.1, 3.3.3, 3.4.1, 3.4.2, 8.1.4, 8.3.6, 8.9.3, 8.9.5, 9.1.3 are mandatory clauses, which must be enforced strictly. The original "Code for Design of Steel Structures" GBJ 17—88 shall be abolished simultaneously.

Research Institute of Standards and Norms-Ministry of Construction will organize the China Planning Press to take on publishing and distributing works of this code.

Ministry of Construction of the People's Republic of China

April 25, 2003

NOTICE

This code is written in Chinese and English. The Chinese text shall be taken as the ruling one in the event of any inconsistency between the Chinese text and the English text.

Preface

According to the requirement of the document Jian Biao [1997] No. 108 of the Ministry of Construction, the Beijing Central Engineering and Research Incorporation of Iron and Steel Industry, together with relevant design, education and research institutions, formed a revising-drafting group and proceeded a comprehensive revision of the "Code for Design of Steel Structures" GBJ 17—88. In the process of the work, an overall revision program was mapped out, and quite a few design codes of foreign countries have been consulted. Solicitation of opinions from all sides was carried out upon completion of the first draft. After many amendments, by putting forward successively the first draft, the draft for seeking opinions and that for reviewing, and upon the performance of tentative design projects by ten-odd participating units for comparison between the new and old codes, the final draft for approval of the "Code for Design of Steel Structures" GB 50017—2003 was completed in December 2001. The major amendments of this revision are as follows:

1. The provisions regarding "quality level of weld", originally Clause 1.0.5 in the Commentary of the former code, has been moved to the text as Clause 7.1.1 of Chapter 7 of the Code. Moreover, the classification principle and specific rule have been added.

2. According to the requirement of the document Jian Biao [1996] No. 626 "Prescription for writing standard of construction work", clauses of "Terms" have been added and compiled together with "Symbols" into Chapter 2. The contents of "Materials", Chapter 2 of the former version, are put into Chapter 3, as Section 3.3 "Material Selection".

3. According to the new National Standards of structural steel, steel grades Q235, Q345, Q390 are recommended and Q420 is added. Requirements for material quality guarantee that various steel structures shall meet are more complete than before. The condition of applicability of 0℃ notch toughness guarantee for Q235 steel has been added and the principle of using Z-direction steel and weathering steel prescribed as well. Meanwhile, the design indices of steels have been somewhat adjusted.

4. In Chapter 3, a section on "Load and calculation of load effects" has been added, emphasizing the appropriateness of using the elastic second-order analysis approach for unbraced pure frames, which considers the effect of deformation on internal forces. Amplification factor for crane transverse horizontal load in the former code has been deleted and calculation formula of transverse horizontal force caused by sway of crane has been given instead.

5. The amendments to the Section "Provisions for deformation of structures and structural members" are:

1) In the text of the Code, design principle solely is mentioned, whereas a table on

limiting values of deformation is given in the Appendix.

2) The limiting values of deformation may be suitably modified according to requirement and experience. The calculation of crane girder deflection under unfactored wheel loads of only one crane is prescribed.

6. Formulas for calculating local stability of girder webs have been significantly altered from the former code, considering no more the webs as fully elastic and perfect, but taking account of the effect of inelastic deformation and geometric imperfection. Furthermore, calculation method for taking account of web post-buckling strength is given, and the restraining factors to webs have been adjusted as well. The formulas for determining stiffener spacing according to fully elastic plate in the former code have been deleted.

7. The classification of sections of axial compression members has been enlarged to include I-and box section with component plates of thickness $t \geqslant 40$mm and the relevant φ factor of class d has been added.

8. The approach to calculating flexural-torsional buckling about the axis of symmetry of struts with mono-symmetric section has been added.

9. The method for calculating forces in lateral bracings used to reduce the unsupported length of compression members or compression flanges has been amended. Also amended is the approach to determining the out-of-plane effective length of cross-diagonals.

10. Frames are distinguished into three categories, namely unbraced pure frames, strongly braced frames and weakly braced frames, and the approach to calculating the effective lengths of these various frames has been given.

11. An approach to determining column effective length of unbraced pure frames and weakly braced frames containing leaning columns have been added.

12. The number of stress cycle, n, has been amended as follows: fatigue calculation shall be carried out when n is equal to or larger than 5×10^4 (in the former code, fatigue calculation is required only when n is equal to or larger than 10^5). Besides, minor amendments to the classification of members and connections for fatigue calculation have been adopted.

13. The limiting value of web depth-thickness ratio in T-section struts and that of beam-columns with web free edge under tension, has been amended.

14. Two sections on "beam-to-column rigid connection" and "calculation of plate elements in joints" have been added, the main contents of which are:

1) Provisions regarding column web or flange thicknees requirements in case no transverse stiffeners are provided to the column in a beam-to-column rigid joint.

2) Strength calculation of plate elements under combined tension and shear, that of truss gusset plates and relevant stability calculation method and prescription.

15. Provisions regarding plate bearing, spherical bearing and composite rubber and steel support have been replenished.

16. Prescriptions on design and detailing of inserted column base, imbedded column base and wrapped column base have been added.

17. Prescription on design and detailing requirements of large-span roof structures has been added.

18. Prescription on requirement of improving the brittle fracture resistance of structures in cold region has been added.

19. The reduction factor 0.9 to the design value of strength of steel and connection for plastic design and steel-concrete composite beams, as prescribed in the former code, has been deleted.

20. Formulas for calculating the strength of circular tube spatial nodes have been added. Method for calculating the strength of rectangular or square tube planar nodes and relevant detailing requirements have been supplemented.

21. The Chapter 11 "Light steel structures of round bars and small angles" of the former code has been deleted.

22. The following issues regarding steel-concrete composite beams have been supplemented: method for calculating the negative moment portion of continuous composite beams, calculation and detailing peculiarity of composite beams with concrete flange cast on profiled steel sheeting, design requirement for composite beams with partial shear-resisting connection and deflection calculation of composite beams.

Clauses marked with boldface letters in the code are mandatory clauses and must be enforced strictly.

The Ministry of Construction is in Charge of management and explanation of mandatory clauses in the code, while the Beijing Central Engineering and Research Incorporation of Iron and Steel Industry will be responsible for explanation of concrete contents. Users are solicited to sum up experiences in the course of Code implementation. Comments and suggestions on this Code are requested to send to the Administrative Group of the National Standard "Code for design of steel structures", Beijing Central Engineering and Research Incorporation of Iron and Steel Industry (Address: 4 Baiguang Road, Beijing, Postcode: 100053; FAX: 010-83587966).

Chief Editorial unit: Beijing Central Engineering and Research Incorporation of Iron and Steel Industry

Participating Editorial units: Chongqing University
Xi'an University of Architecture and Technology
Chongqing Iron & Steel Designing Institute
Tsinghua University
Zhejiang University
Harbin Institute of Technology
Tongji University

Tianjin University
South China University of Technology
Northeast Investigation, Design and Research Institute, MWR
China Aeronautical Project and Design Institute
IPPR Engineering International
Central Research Institute of Building and Construction of MMI
North West Electric Power Design Institute
Maanshan Iron & Steel Design & Research Institute
Sinopec Engineering Incorporation
Wuhan Iron & Steel Design & Research Institute
Shanghai Metallurgical Design and Research Institute
Maanshan Iron & Steel Co., Ltd
Zhejiang Hangxiao Steel Structre Co., Ltd
Laiwu Steel Group Ltd
Hilti (China) Co., Ltd
Zhejiang Jinggong Steel Building Co., Ltd
Baoli Co., Ltd
Shanghai Pengpu General Factory

Chief Drafting staff: Zhang Qiwen Xia Zhibin Huang Youming Chen Shaofan Wang Guozhou Wei Mingzhong Zhao Xiyuan Cui Jia Zhang Yaochun Shen Zuyan Liu Xiliang Liang Qizhi Yu Guoyin Liu Shutun Cui Yuanshan Feng Lian Xia Zhengzhong Dai Guoxin Tong Genshu Gu Qiang Shu Xingping Zou Hao Shi Yongjiu Dan Zeyi Nie Jianguo Chen Yiyi Ding Yang Xu Guobin Wei Chaowen Chen Chuanzheng Chen Guodong Mu Haisheng Zhang Pingyuan Tao Hongbin Wang Zhi Tian Sifang Li Maoxin Chen Ruijin Cao Pinran Wu Zhenyu Zou Yinong Hou Cheng Guo Yaojie Lu Xiaosong Zhu Dan Liu Gang Zhang Xiaoping Huang Mingxin Hu Yong Zhang Jihong Yan Zhengting

List of translators and reviewers:

Translators:

Chen Shaofan: Preface and Chapters 1 through 6
Shi Yongjiu: Chapters 7,8,9
Zhang Yaochun: Chapter 10

Nie Jianguo: Chapter 11

Reviewers:

Chen Shaofan: Whole work

Xia Zhibin: Preface and Chapteres 1 through 6

Wang Guozhou: Chapters 7,8,9,11

Table of Contents

1 General principles 1
2 Terms and symbols 2
2.1 Terms 2
2.2 Symbols 4
3 Basic design stipulations 10
3.1 Design principles 10
3.2 Load and calculation of load effects 11
3.3 Material selection 13
3.4 Design indices 15
3.5 Provisions for deformation of structures and structural members 18
4 Calculation of flexural members 19
4.1 Strength 19
4.2 Overall stability 21
4.3 Local stability 22
4.4 Calculation of built-up girder with webs taking account of post-buckling strength 28
5 Calculation of axially loaded members and members subjected to combined axial load and bending 31
5.1 Axially loaded members 31
5.2 Members subjected to combined axial load and bending 38
5.3 Effective length and allowable slenderness ratio 42
5.4 Local stability of compression members 48
6 Fatigue calculation 51
6.1 General stipulations 51
6.2 Fatigue calculation 51
7 Calculation of connections 53
7.1 Welded connection 53
7.2 Fastener (bolted and riveted) connection 56
7.3 Flange connection of built-up I-section (girder) 59
7.4 Beam-to-column rigid connection 60
7.5 Calculation of connected plates at joints 62
7.6 Supports (bearings) 63
8 Detailing requirements 65
8.1 General stipulations 65
8.2 Welded connection 66

8.3 Bolted and riveted connections ····· 68
8.4 Structural members ····· 69
8.5 Requirements for crane girders and crane trusses (or similar structures) ····· 72
8.6 Large span roof structures ····· 75
8.7 Requirements for preventing brittle fracture under low temperature ····· 75
8.8 Fabrication, transportation and erection ····· 76
8.9 Protection and heat insulation ····· 76
9 Plastic design ····· 78
9.1 General stipulations ····· 78
9.2 Calculation of members ····· 78
9.3 Allowable slenderness ratio and detailing requirements ····· 79
10 Steel tubular structures ····· 81
10.1 General stipulations ····· 81
10.2 Detailing requirements ····· 81
10.3 Capacity of members and joints ····· 83
11 Composite steel and concrete beams ····· 91
11.1 General stipulations ····· 91
11.2 Design of composite beams ····· 93
11.3 Calculation of shear connectors ····· 95
11.4 Calculation of deflection ····· 98
11.5 Detailing requirements ····· 100
Appendix A Allowable deflection of structures or structural members ····· 103
Appendix B Overall stability factor of beams ····· 105
Appendix C Stability factor of axial compression members ····· 109
Appendix D Effective length factor for columns ····· 114
Appendix E Classification of members and connections for fatigue calculation ····· 125
Appendix F Stability calculation of truss gusset plate subject to compressive force of the diagonal web member ····· 128
Explanation of wording in this Code ····· 130

1 General principles

1.0.1 This Code intends to implement the technical-economic policy of the State in the design of steel structures, by using advanced technology and ensuring economy, reasonableness, safety, suitability for use and good quality of the structures.

1.0.2 This Code applies to the design of steel structures of industrial and civil buildings and allied engineering structures, among which members made of cold-formed steel shapes and their connections shall comply with the current national standard "Technical code of cold-formed thin-wall steel structures" GB 50018.

1.0.3 The design principles of this Code are based on the "Unified standard for reliability design of building structures" GB50068. Loadings and their combination values assumed in designing with this code shall comply with the current national standard "Load code for the design of building structures" GB 50009. Buildings and engineering structures in seismic region shall furthermore comply with the current national standards "Code for seismic design of buildings" GB 50011, "Seismic ground motion parameter zonation map of China" GB 18306 and "Design code for antiseismic of special structures" GB 50191.

1.0.4 In designing steel structures, designers shall consider the real situation of the project , select reasonably the material, the structural scheme and detailing measures. The requirements of strength, stability and stiffness of the structure during transportation, erection and service, as well as requirements of fire protection and corrosion resistance shall be fulfilled. Typical and standardized structures and structural members should be adopted in preference, the amount of fabrication and erection work should be reduced .

1.0.5 In the design documents of steel structures shall be indicated the design working life of the building structures, the steel grade, the category (or grade) of connection materials and mechanical properties, chemical composition and additional items of guarantee of the steel. Moreover, the weld type and the class of weld quality, the location of end planning for close fitting and its quality requirement shall also be indicated.

1.0.6 The design of steel structures with special requirements and those under special circumstances shall furthermore comply with the relevant current national codes.

2 Terms and Symbols

2.1 Terms

2.1.1 Strength

The capacity of resisting failure in member cross-section material or connection. Strength checking aims at preventing failure of structural members or connections from exceeding the material strength.

2.1.2 Load-carrying capacity

The largest internal force that a structure or member can bear without failure from strength, stability or fatigue, etc., or the largest internal force at the onset of failure mechanism in plastically analyzed structures; or the internal force generating a deformation that hinders further loading.

2.1.3 Brittle fracture

In general, the suddenly occurred brittle fracture of a steel structure subject to tensile stress without warning by plastic deformation.

2.1.4 Characteristic value of strength

The yield point (yield strength) or tensile strength of steel as specified by National Standard.

2.1.5 Design value of strength

The value obtained from division of the characteristic value of strength of steel or connection by corresponding partial factor of resistance.

2.1.6 First order elastic analysis

The elastic analysis of structure internal forces and deformation, based on the equilibrium condition of undeformed structure, taking no account of the effect of the second order deformation on infernal forces.

2.1.7 Second order elastic analysis

The elastic analysis of structure internal forces and deformation, based on the equilibrium condition of deformed structure, taking account of the effect of the second order deformation on internal forces.

2.1.8 Buckling

An abrupt large deformation, not conforming to the original configuration of members or plates subject to axial compression, bending moment or shear force, and thereby causing loss of stability.

2.1.9 Post-buckling strength of web plate

The capacity of web plates to bear further loading after buckling.

2.1.10 Normalized web slenderness

Parameter, equal to the square root of the quotient of steel yield strength in flexion, shear or compression by corresponding elastic buckling stress of web plates in flexion, shear or local compression.

2.1.11 Overall stability

Assessment of the possibility of buckling or loss of stability of structures or structural numbers as a whole under the action of external loading.

2.1.12 Effective width

That part of plate width assumed effective in checking the section strength and the stability.

2.1.13 Effective width factor

Ratio of the effective width to the actual width of a plate element.

2.1.14 Effective length

The equivalent length of a member obtained by multiplying its geometrical length within adjacent effective restraining points by a coefficient taking account of end deformation condition and loading condition. The length of welds assumed in calculation of the strength of welded connections.

2.1.15 Slenderness ratio

The ratio of member effective length to the radius of gyration of its cross-section.

2.1.16 Equivalent slenderness ratio

The slenderness ratio transforming a lattice member into solid-wed one according to the principle of equal critical force for checking the overall stability of axial compression members. The slenderness ratio transforming a flexural-torsional buckling and torsional bucking into flexural buckling.

2.1.17 Nodal bracing force

Force to be applied at the location of lateral support installed for reducing the unsupported length of a compression member (or compression flange of a member). This force acts in the direction of member buckling at the shear center of the member section.

2.1.18 Unbraced frame

Frames resisting lateral load by bending resistance of members and their connections.

2.1.19 Frame braced with strong bracing system

A frame braced with bracing system of large stiffness against lateral displacement(bracing truss, shear wall, elevator well, etc.), adequate to be regarded as frame without sidesway.

2.1.20 Frame braced with weak bracing system

A frame braced with bracing system of weak stiffness against lateral displacement, inadequate to be regarded as frame without sidesway.

2.1.21 Leaning column

A column hinged at both ends and not capable of resisting lateral load in a framed

structure.

2.1.22 Panel zone of column web

The zone of column web within the beam depth at a rigid joint of frame.

2.1.23 Spherical steel bearing

A hinged or movable support transmitting force through a spheric surface allowing the structure to rotate in any direction at the support.

2.1.24 Composite rubber and steel support

A support transmitting end reaction through a composite product of rubber and thin steel plates satisfying the displacement requirement at the support.

2.1.25 Chord member

Members continuous through panel points in tubular structures, similar to chord members in regular trusses.

2.1.26 Bracing member

Members cut short and connected to the chord members at panel points in tubular structures, similar to web members in regular trusses.

2.1.27 Gap joint

Joints of tubular structures where the toes of two bracing members are distant from each other by a gap.

2.1.28 Overlap joint

Joints of tubular structures where the two bracing members are overlaping.

2.1.29 Uniplanar joint

Joints where chord member is connected to bracing members in a same plane.

2.1.30 Multiplannar joint

Tubular joints where chord member is connected to bracing members in different planes.

2.1.31 Built-up member

Members fabricated by joining more than one plate elements(or rolled shapes), such as built-up beams or columns of I-or box-section.

2.1.32 Composite steel and concrete beam

A beam composed of steel beam and concrete flange plate, acting as an integrated member by means of shear connectors.

2.2 Symbols

2.2.1 Actions and effects of actions

F——concentrated load;

H——horizontal force;

M——bending moment;

N——axial force;

P——pretension of high-strength bolts;

Q——gravity load;

R——reaction of support;

V——shear force.

2.2.2 Calculation indices

E——modulus of elasticity of steel;

E_c——modulus of elasticity of concrete;

G——shear deformation modulus of steel;

N_t^a——design value of tensile capacity of an anchor bolt;

N_t^b, N_v^b, N_c^b——design values of tensile, shear and bearing capacities of a bolt;

N_t^r, N_v^r, N_c^r——design values of tensile, shear and bearing capacities of a rivet;

N_v^c——design value of shear capacity of a connector in composite structures;

N_t^{pj}, N_c^{pj}——design values of capacities of bracing members in tension and in compression at a joint of tubular structures;

S_b——lateral sway stiffness of bracing structures (horizontal force causing a leaning angle of unity);

f——design value of tensile, compressive and bending strength of steel;

f_v——design value of shear strength of steel;

f_{ce}——design value of end bearing strength of steel;

f_{st}——design value of tensile strength of reinforcing bars;

f_y——yield strength (or yield point) of steel;

f_t^a——design value of tensile strength of an anchor bolt;

f_t^b, f_v^b, f_c^b——design values of tensile, shear and bearing strengths of bolts;

f_t^r, f_v^r, f_c^r——design values of tensile, shear and bearing strengths of rivets;

f_t^w, f_v^w, f_c^w——design values of tensile, shear and compressive strengths of butt welds;

f_f^w——design value of tensile, shear and compressive strength of fillet welds;

f_c——design value of axial compressive strength of concrete;

Δu——lateral inter-story deflection;

$[v_Q]$——allowable deflection taking into account solely the characteristic value of variable loads;

$[v_T]$——allowable deflection taking into account the characteristic value of permanent and variable loads simultaneously;

σ——normal stress;

σ_c——local compressive stress;

σ_f——stress normal to the direction of the length of a fillet weld, calculated on its effective section;

$\Delta\sigma$——stress range or reduced stress range for fatigue calculation;

$\Delta\sigma_e$——equivalent stress range of variable amplitude fatigue;

$[\Delta\sigma]$——allowable stress range of fatigue;

$\sigma_{cr}, \sigma_{c,cr}, \tau_{cr}$——critical stresses of plate under individual action of bending stress, local compressive stress and shear stress respectively;

τ——shear stress;

τ_f——shear stress of a fillet weld along the direction of its length calculated on its effective section;

ρ——density of mass.

2.2.3 Geometric parameters

A——gross sectional area;

A_n——net sectional area;

H——column height;

H_1, H_2, H_3——heights of the upper, middle (or lower) and lower portions of stepped columns;

I——moment of inertia of gross section;

I_t——torsional moment of inertia (St. Venant torsion constant) of gross section;

I_ω——sectorial moment of inertia (warping constant) of gross section;

I_n——moment of inertia of net section;

S——first moment of gross sectional area;

W——gross section modulus;

W_n——net section modulus;

W_p——plastic gross section modulus;

W_{pn}——plastic net section modulus;

a, g——spacing; gap;

b——plate width or free outstand of plate;

b_0——flange unsupported width between webs of a box-section; width of the top surface of the concrete haunch;

b_s——outstand of stiffeners;

b_e——effective width of plate;

d——diameter;

d_e——effective diameter;

d_0——hole diameter;

e——eccentricity;

h——full height of a section(section depth); story height;

h_{c1}——thickness of concrete slab;

h_{c2}——thickness of concrete haunch;

h_e——effective thickness of fillet welds;

h_f——leg size of fillet welds;

h_w——web height(web depth);

h_0——effective web height;

i——radius of gyration of a section;

l——length or span length;

l_1——spacing of lateral supports in the compression flange of a beam; connecting length of bolted (riveted) joints in the direction of force;

l_0——effective length for flexural buckling;

l_ω——effective length for torsional buckling;

l_w——effective length of welds;

l_z——assumed distribution length of a concentrated load on the edge of effective web depth;

s——shortest distance from the root of the groove to weld surface in an incomplete penetration butt weld;

t——plate thickness; wall thickness of (tubular) chord members;

t_s——stiffener thickness;

t_w——web thickness;

α——angle;

θ——angle; angle of stress dispersal;

λ_b——normalized depth-thickness ratio in calculating girder web subject to bending moment;

λ_s——normalized depth-thickness ratio in calculating girder web subject to shear force;

λ_c——normalized depth-thickness ratio in calculating girder web subject to local compressive force;

λ——slenderness ratio;

$\lambda_0, \lambda_{yz}, \lambda_z, \lambda_{uz}$——equivalent slenderness ratio.

2.2.4 Coefficients of calculation and others

C——dimensional parameter for fatigue calculation;

K_1, K_2——ratios of linear stiffness of members;

k_s——shear buckling factor of members;

O_v——overlap ratio of bracing members in tubular joints;

n——number of bolts, rivets or connectors; number of stress cycles;

n_1——number of bolts(or rivets)on a calculated section;

n_f——number of frictional force transferring surfaces in a high-strength bolted connection;

n_v——number of shear planes of bolts or rivets;

α——coefficient of linear expansion; coefficient for calculating transverse force generated by crane sway;

α_E——modular ratio of steel to concrete;

α_e——reduction factor of girder section modulus taking account of web effective depth;

α_f——equivalent factor of underloading effect for fatigue calculation;

α_0——stress gradient factor of column web;

α_y——factor of steel strength effect;

α_l——factor for planed and closely fitted web edge;

α_{2i}——amplification coefficient for bending moment of the i-th story members due to lateral translation of a frame, taking account of second order effect;

β——ratio of outside diameter of bracing member to that of chord member; parameter for fatigue calculation;

β_b——factor of equivalent critical moment for overall stability of beams;

β_f——amplification coefficient for design value of the transverse fillet weld strength;

β_m, β_t——factors of equivalent moment for beam-column stability;

β_l——amplification coefficient of design value of strength for reduced stress;

γ——strength-yielding ratio of stud steel;

γ_0——importance factor of structures;

γ_x, γ_y——plasticity adaptation factor of cross-sections about principal axes x, y;

η——modification factor;

η_b——factor of unsymmetry of a beam section;

η_1, η_2——parameters for calculation the effective length of stepped columns;

μ——slip coefficient for friction surfaces in a high-strength bolted connection; effective length factor of columns;

μ_1, μ_2, μ_3——effective length factors for the upper, middle (or lower) and lower portions of stepped columns;

ξ——parameter for checking overall stability of beams;

ρ——effective width factor of web compressive zone;

φ——stability factor of axial compression members;

φ_b, φ'_b——overall stability factors of beams;

ψ——amplification coefficient of a concentrated load ;

ψ_n, ψ_a, ψ_d——parameters for capacity calculation of directly welded tubular joints.

3 Basic design stipulations

3.1 Design principles

3.1.1 For all calculations except fatigue calculation, the limit state design method based on probabilistic theory is adopted, using design expressions with partial safety factors.

3.1.2 Load-carrying structures shall be designed according to the following ultimate limit states and serviceability limit states:

1 The ultimate limit states include: strength failure of members and connections, fatigue failure and excessive deformation no longer suitable for carrying load, loss of stability of structures and members, formation of mechanism and overturning of the structure.

2 The serviceability limit states include: deformations affecting normal use and appearance of a structure, structural and non-structural components, vibration affecting normal use, local damage (including concrete cracks) affecting normal use or durability.

3.1.3 In the design of steel structures, different classes of safety shall be adopted according to the consequence of damage which may be caused by a structural failure.

Steel structures of industrial and civil buildings, in general, shall be taken as safety class 2, whereas for a special building structure the safety class shall be dealt with individually in conformity to its actual condition.

3.1.4 In designing a steel structure according to the ultimate limit state, the basic combination of load effects shall be considered and, if necessary, the accidental combination of load effects shall also be considered.

In designing a steel structure according to the serviceability limit state, the normal combination of load effects shall be considered, whereas for composite steel and concrete beams, the quasi-permanent combination shall also be considered.

3.1.5 In checking the strength and stability of structures or structural members and also the strength of connections, the design value of loads shall be used (i.e. the characteristic value of loads multiplied by partial safety factor for loads), whereas in checking fatigue, the characteristic value of loads shall be used.

3.1.6 For checking the strength and stability of structures subjected to direct dynamic loading, the design value of the dynamic load shall be multiplied by an dynamic factor, whereas the characteristic value of the dynamic load without dynamic factor shall be used in checking fatigue and deformation.

In the calculation of fatigue and deflection of crane girders or crane trusses together with their surge girders, the crane load shall be determined by one of the cranes of largest

loading effect in the bay.

3.2 Load and calculation of load effects

3.2.1 In the design of steel structures, the characteristic value of loads, the partial safety factor for loads, the load combination coefficient, the dynamic factor of dynamic loads shall comply with the requirements of the current national standard "Load code for the design of building structures"GB 50009.

The importance factor of structures γ_0 shall comply with the current national standard "Unified standard for reliability design of building structures"GB 50068. Among others, γ_0 for structural members with design working life of 25 years shall not be less than 0.95.

Note: For members or structures supporting light roofing (purlins, roof trusses, frames, etc.), the characteristic value of uniform roof live load shall be taken as 0.3kN/m^2 when only one variable load is acting and that the horizontal projection of the loaded area exceeds 60m^2.

3.2.2 In checking the strength and stability of crane girders (or trusses) for heavy duty cranes and the associated surge girders, and also in checking the strength of their connections (mutual connections between crane girders or trusses, surge girders and columns), a horizontal transverse force generated by sway of cranes shall be taken into account. The characteristic value of this horizontal force acting at each wheel of the crane should be the following:

$$H_k = \alpha P_{k,max} \tag{3.2.2}$$

where $P_{k,max}$——characteristic value of maximum wheel load from the crane;

α——coefficient, $\alpha = 0.1$ for regular cranes with flexible hook, $\alpha = 0.15$ for grab cranes and magnetic disc cranes and $\alpha = 0.2$ for cranes with rigid hook.

Note: The current national standard "Code for design of cranes"GB/T 3811 classifies cranes into A1 through A8 categories according to their working grade. Generally speaking, light duty regime in this Code corresponds to categories A1～A3; medium duty regime corresponds to categories A4 and A5; heavy duty regime corresponds to categories A6～A8, while A8 belongs to extra-heavy duty.

3.2.3 In checking roof trusses with suspended cranes and electric hoisting tackles, the number of hoisting equipment on each operation route in one bay should not be more than two for girder crane and not more than one for electric tackle.

3.2.4 In calculating working platform structures of metallurgical workshop or of similar workshops , the loading caused by repairing materials may be multiplied by a reduction factor:

0.85 for main girders;

0.75 for columns(including foundation).

3.2.5 The structure calculation model and basic assumptions shall comply with the actual behavior of members and connections as far as possible.

3.2.6 The internal forces of building structures are generally determined by elastic analysis according to structural statics; statically indetermined structures, satisfying the requirements of Chapter 9 of this Code, may adopt plastic analysis. Structures analyzed elastically are allowed to develop plastic deformation in member sections.

3.2.7 In framed structures, a rigid beam-to-column connection shall be consistent with the assumption that the angle between intersecting members remains unchanged under loading and that the joints are strong enough to bear all the most unfavorable internal forces transmitted to the ends of intersecting members. A hinged beam-to-column connection shall have adequate rotation capacity and can effectively transmit transverse shear and axial force. A semi-rigid beam-to-column connection has only limited rotational stiffness and the angle between intersecting members varies at the onset of bending moment. The moment-rotation characteristic curve of the connection must be determined beforehand in analyzing internal forces in order to account for the effect of connection deformation.

3.2.8 The internal force analysis of framed structures should comply with the following:

1 First-order elastic analysis may be used for framed structures.

2 Second-order elastic analysis should be used for those framed structures where the inequality $\frac{\sum N \cdot \Delta u}{\sum H \cdot h} > 0.1$ holds. In this situation, notional horizontal forces H_{ni} calculated with Formula(3.2.8-1), shall be applied at the column top of each storey:

$$H_{ni} = \frac{\alpha_y Q_i}{250}\sqrt{0.2 + \frac{1}{n_s}} \tag{3.2.8-1}$$

where Q_i——design value of total gravity load at the i-th storey top;

n_s——number of stories in the frame; when $\sqrt{0.2+1/n_s}>1$, take this square root equal to 1;

α_y——factor of steel strength effect, taken as 1.0 for Q235 steel; 1.1 for Q345 steel; 1.2 for Q390 steel and 1.25 for Q 420 steel.

For pure frames without bracing, the second order elastic moment at member ends may be calculated by the following approximate formula:

$$M_{\mathrm{II}} = M_{\mathrm{Ib}} + \alpha_{2i} M_{\mathrm{Is}} \tag{3.2.8-2}$$

$$\alpha_{2i} = \frac{1}{1 - \frac{\sum N \cdot \Delta u}{\sum H \cdot h}} \tag{3.2.8-3}$$

where M_{Ib}—— moment at member ends given by first order elastic analysis assuming null sidesway of the frame;

M_{Is}——moment at member ends due to sidesway of frame joints according to first order elastic analysis;

α_{2i}—— amplifying factor of sway moment of the i-th storey members taking account for second order effect;

$\sum N$—— sum of design values of column axial compression in the calculated storey;

$\sum H$—— sum of horizontal forces of the calculated storey and storey above generating the interstorey lateral deflection Δu;

Δu—— interstorey lateral deflection of the calculated storey according to first-order analysis, the allowable storey drift[Δu]may be used for Δu as an approximation when determining the necessity of adopting second-order analysis;

h—— height of the calculated storey.

Note:1 The stiffness of the framed structures should be enlarged when $\alpha_{2i} > 1.33$ is obtained from formula (3.2.8-3).

2 This provision does not apply to the pitched portal frame and the like, nor to framed structures designed by plastic analysis according to Chapter 9 of this Code.

3.3 Material selection

3.3.1 The grade and quality of steel used for load-carrying structures shall be selected in taking comprehensive account of the importance, the loading characteristic, the structural type, the stress state, the connection device, the thickness of steel and the working circumstance of the structure etc..

The material of load-carrying structures may be steel of grades Q235, Q345, Q390 and Q420. Their quality shall conform respectively to the requirements of the current national standards "Carbon structural steels" GB/T 700 and "High strength low-alloy structural steels"GB/T 1591. Steel of other grades, if adopted for use, shall furthermore conform to the requirements of the relevant standards.

3.3.2 Grade Q235 rimmed steel shall not be used for the following load-carrying structures and members.

1 Welded structures

1) Structures subject to direct dynamic or vibrational load requiring fatigue check.

2) Structures subject to direct dynamic or vibrational load but not requiring fatigue check and important structures subject to bending and tension under static load, in case their working temperature is lower than −20℃.

3) All kinds of load-carrying structure whose working temperature is equal to or lower than −30℃.

2 Non-welded structures: structures subject to direct dynamic load requiring fatigue check, whose working temperature is equal to or lower than −20℃.

3.3.3 Steel for load-carrying structures shall be guaranteed for meeting the requirements of tensile strength, percentage of elongation, yield strength (or yield point) and also of proper sulfur and phosphorus contents. For welded structures, the steel shall also be

guaranteed for proper carbon content.

The steel for welded and important non-welded load-carrying structures shall also be guaranteed for passing the cold-bending test.

3.3.4 Steel used for welded structures requiring fatigue check shall be guaranteed for meeting the requirement of notch toughness at normal temperature. But, in case the working temperature is not higher than 0℃ but higher than −20℃, Q235 and Q345 steel shall be guaranteed for meeting the requirement of notch toughness at the temperature 0℃, whereas steels Q390 and Q420 shall be guaranteed for meeting the requirement of notch toughness at the temperature of −20℃. In case the working temperature is not higher than −20℃, the notch toughness test shall be performed at −20℃ for Q235 and Q345 and at −40℃ for Q390 and Q420 steels.

Steel used for non-welded structures, requiring fatigue check shall also be guaranteed for the requirement of notch toughness at normal temperature. In case the working temperature is not higher than −20℃, the notch toughness test shall be performed at 0℃ for Q235 and Q345 steels and at −20℃ for Q390 and Q420 steels.

Note: crane girders for crane of medium duty with capacity not less than 50t shall meet the notch toughness requirement identical to members requiring fatigue checking.

3.3.5 The steel quality for cast steel parts shall conform to the current national standard, "Carbon steel castings for general engineering purpose" GB/T 11352.

3.3.6 When welded load-carrying structures adopt Z-direction steel for preventing lamellar tearing, the steel quality shall conform to the current national standards "Steel plate with through-thickness characteristics"GB/T 5313.

3.3.7 Load-carrying structures, exposed to atmospheric circumstance and requiring specific corrosion protection, or exposed to corrosive gaseous and solid medium, should use weathering steel whose quality shall conform to the requirements of the current national standard "Atmospheric corrosion resisting steel for weld structures"GB/T 4172.

3.3.8 The connection material of steel structures shall comply with the following requirements:

1 The electrodes used for manual welding shall meet the requirements of the current national standard, "Carbon steel covered electrodes" GB/T 5117, or "Low-alloy steel covered electrodes" GB/T 5118. The type of selected electrodes shall match the base metal in mechanical properties. For structures subject to direct dynamic or vibrational load and requiring fatigue check, low-hydrogen electrodes should be used.

2 The wire and flux used for automatic or semi-automatic welding shall match the base metal in mechanical properties and meet the requirements of the relevant current national standards.

3 Ordinary bolts shall meet the requirements of the current national standard "Hexagon head bolts -product grade C" GB/T 5780 and "Hexagon head bolts" GB/T 5782.

4 High-strength bolts shall meet the requirements of the current national standards "High strength bolts with large hexagon head for steel structures" GB/T 1228, "High strength large hexagon nuts for steel structures"GB/T 1229, "High strength plain washers for steel structures "GB/T 1230, "Specification of high strength bolts with large hexagon head, large hexagon nuts, plain washers for steel structures"GB/T 1231 or "Sets of torshear type high strength bolt, hexagon nut and plain washer for steel structures" GB/T 3632, "Technical requirement for set of torshear type high strength bolt, hexagon nut and plain washers for steel structures"GB/T 3633.

5 The material of cheese head stud connector shall meet the requirements of the current national standard "Cheese head studs for arc stud welding "GB/T 10433.

6 Rivets shall be made of BL2 or BL3 steel specified in current national standard "Hot-rolled carbon steel bars for standard parts"GB/T 715.

7 Anchor bolts may be made of Q235 steel or Q345 steel specified respectively in the current national standards "Carbon structural steel"GB/T 700 or "High strength low-alloy structure steel"GB/T 1591.

3.4 Design indices

3.4.1 The design value of steel strength shall be taken from Table 3.4.1-1 according to the steel thickness or diameter. The design value of strength of cast steel parts shall be taken from Table 3.4.1-2. The design value of connection strength shall be taken from Tables 3.4.1-3 through 3.4.1-5.

Table 3.4.1-1 Design value of steel strength (N/mm²)

Steel		Tension, compression and bending f	Shear f_v	End bearing (planed and closely fitted) f_{ce}
Grade	Thickness or diameter (mm)			
Q235	≤16	215	125	325
	>16~40	205	120	
	>40~60	200	115	
	>60~100	190	110	
Q345	≤16	310	180	400
	>16~35	295	170	
	>35~50	265	155	
	>50~100	250	145	
Q390	≤16	350	205	415
	>16~35	335	190	
	>35~50	315	180	
	>50~100	295	170	
Q420	≤16	380	220	440
	>16~35	360	210	
	>35~50	340	195	
	>50~100	325	185	

Note: Thickness in this table denotes the steel thickness at the calculation location, for members subject to axial force, it is the thickness of the thicker plate element of the section.

Table 3.4.1-2 Design value of cast steel strength (N/mm²)

Steel grade	Tension, compression and bending f	Shear f_v	End bearing (planed and closely fitted) f_{ce}
ZG200-400	155	90	260
ZG230-450	180	105	290
ZG270-500	210	120	325
ZG310-570	240	140	370

Table 3.4.1-3 Design value of weld strength (N/mm²)

Method of welding and type of electrode	Member material		Butt weld				Fillet weld
	Steel grade	Thickness or diameter (mm)	Compression f_c^w	Tension, f_t^w, for weld quality of class		Shear f_v^w	Tension, compression and shear f_f^w
				1 and 2	3		
Automatic, semi-automatic welding and manual welding with E43 type electrode	Q235	≤16	215	215	185	125	160
		>16~40	205	205	175	120	
		>40~60	200	200	170	115	
		>60~100	190	190	160	110	
Automatic, and semi-automatic welding and manual welding with E50 type electrode	Q345	≤16	310	310	265	180	200
		>16~35	295	295	250	170	
		>35~50	265	265	225	155	
		>50~100	250	250	210	145	
Automatic, and semi-automatic welding and manual welding with E55 type electrode	Q390	≤16	350	350	300	205	220
		>16~35	335	335	285	190	
		>35~50	315	315	270	180	
		>50~100	295	295	250	170	
	Q420	≤16	380	380	320	220	220
		>16~35	360	360	305	210	
		>35~50	340	340	290	195	
		>50~100	325	325	275	185	

Note: 1 The electrode wire and flux used for auromatic and semi-automatic welding shall be guaranteed that the mechanical properties of the deposited metal is not lower than the stipulations of the current national standards "Carbon steel electrodes and fluxes for submerged arc welding" GB/T 5293 and "Fluxes for the submerged arc welding of low alloy steel" GB/T 12470.

2 The weld quality class shall comply with the stipulations of the current national standard "Code for acceptance of construction quality of steel structures" GB 50205. For butt welds of steel components thinner than 8mm ultrasonic flaw detector shall not be used to determine the weld quality class.

3 For butt welds subject to flexion, take f_c^w as the design value of strength in compression zone and f_t^w in tension zone.

4 "Thickness" in this table denotes the steel thickness at the location of calculation. For members in axial tension and axial compression it is the thickness of the thicker plate element of the section.

Table 3.4.1-4 Design value of bolted connection strength (N/mm^2)

Property grade of bolts, steel grade of anchor bolts and members		Ordinary bolts						Anchor bolts	High strength bolts in bearing type joint		
		Grade C			Grade A,B						
		Tension f_t^b	Shear f_v^b	Bearing f_c^b	Tension f_t^b	Shear f_v^b	Bearing f_c^b	Tension f_t^a	Tension f_t^b	Shear f_v^b	Bearing f_c^b
Ordinary bolts	4.6, 4.8	170	140	—	—	—	—	—	—	—	—
	5.6	—	—	—	210	190	—	—	—	—	—
	8.8	—	—	—	400	320	—	—	—	—	—
Anchor bolts	Q235	—	—	—	—	—	—	140	—	—	—
	Q345	—	—	—	—	—	—	180	—	—	—
High strength bolts in bearing type joint	8.8	—	—	—	—	—	—	—	400	250	—
	10.9	—	—	—	—	—	—	—	500	310	—
Members	Q235	—	—	305	—	—	405	—	—	—	470
	Q345	—	—	385	—	—	510	—	—	—	590
	Q390	—	—	400	—	—	530	—	—	—	615
	Q420	—	—	425	—	—	560	—	—	—	655

Note: 1 Grade A bolts are used for bolts with $d \leqslant 24$mm and $l \leqslant 10d$ or $l \leqslant 150$mm (take the lesser value); grade B bolts are used for bolts with either $d > 24$mm or $l > 10\ d$ or $l > 150$mm (take the lesser value). d is the nominal diameter. l is the nominal length of bolt shank.

2 The precision and the surface roughness of holes of grade A,B bolts and the tolerance and surface roughness of holes of grade C bolts shall meet the requirements of the current national standard "Code for acceptance of construction quality of steel structures" GB 50205.

Table 3.4.1-5 Design value of riveted connection strength (N/mm^2)

Steel grade of rivet and member		Tension (breaking of rivet head) f_t^r	Shear f_v^r		Bearing f_c^r	
			Class Ⅰ holes	Class Ⅱ holes	Class Ⅰ holes	Class Ⅱ holes
Rivet	BL2 or BL3	120	185	155	—	—
Member	Q235	—	—	—	450	365
	Q345	—	—	—	565	460
	Q390	—	—	—	590	480

Note: 1 Holes made by the following processes belong to class Ⅰ:

1) Holes drilled to the design diameter on assembled members;

2) Holes drilled to the design diameter separately on individual elements and members by using drilling template;

3) Holes drilled or punched to a smaller diameter on individual elements and reamed afterwards to the design diameter on assembled member.

2 Holes punched or drilled without template to the design diameter on individual elements belong to class Ⅱ.

3.4.2 The design value of strength specified in Clause 3.4.1 shall be multiplied by a relevant reduction factor in the following situations of member and connection calculation:

1 Single angle connected by one leg

1) For checking member and connection strength as axially loaded, multiply by 0.85;

2) For checking stability as an axial compression member:

Equal leg angles, multiply by $0.6+0.0015\lambda$, but not larger than 1.0; Unequal leg angles connected by short leg, multiply by $0.5+0.0025\lambda$, but not larger than 1.0; Unequal leg angles connected by long leg, multiply by 0.7; where λ is the slenderness ratio, which shall be determined by the least radius of gyration for a single angle compression member without intermediate connection. Assume $\lambda=20$ when $\lambda<20$.

2 Butt weld performed by welding from one side without backing plate, multiply by 0.85;

3 Welded and riveted erection connections made high above the ground in unfavorable conditions, multiply by 0.9;

4 Countersunk and semicountersunk riveted connection, multiply by 0.8.

Note : When several of these situations occur simultaneously, the relevant reduction factors shall be multiplied successively.

3.4.3 The indices of physical properties of rolled and cast steel shall be taken acording to Table 3.4.3.

Table 3.4.3 Indices of physical properties of rolled and cast steel

Modulus of elasticity E(N/mm^2)	Shear deformation modulus G(N/mm^2)	Coefficient of linear expansion α(per℃)	Density ρ (kg/m^3)
206×10^3	79×10^3	12×10^{-6}	7850

3.5 Provisions for deformation of structures and structural members

3.5.1 In order not to impair the serviceability, nor to affect the appearance of structures and structural members, their deformation (deflection or lateral drift) shall comply with the relevant limiting values in designing. The allowable values of deformation, as a general rule, are specified in Appendix A of this Code. The values therein may be suitably modified in consideration of practical experiences or to meet a specific demand, provided the serviceability is not impaired nor the appearance affected.

3.5.2 Reduction of sectional area by bolt (or rivet) holes may not be taken into account in the deformation calculation of steel structures and members.

3.5.3 In order to improve the appearance and the service condition, members subject to transverse forces may be given a predetermined camber, whose magnitude shall be set according to practical need and usually taken as the deflection caused by the unfactored dead load plus one half unfactored live load. In the case of solely improving the appearance, the member deflection shall be taken as that calculated from the unfactored dead and live load and minus the camber.

4 Calculation of flexural members

4.1 Strength

4.1.1 The bending strength of solid web members bent in their principal planes shall be checked as follows (for members taking account of web post-buckling strength see Clause 4.4.1 of this Code):

$$\frac{M_x}{\gamma_x W_{nx}} + \frac{M_y}{\gamma_y W_{ny}} \leqslant f \tag{4.1.1}$$

where M_x, M_y——bending moments about x-and y-axes at a common section (for I-section, x-axis is the strong axis and y is the weak axis);

W_{nx}, W_{ny}——net section moduli about x-and y-axes;

γ_x, γ_y——plasticity adaptation factors, $\gamma_x = 1.05$, $\gamma_y = 1.20$ for I-section, $\gamma_x, \gamma_y = 1.05$ for box section, see Table 5.2.1 for other sections;

f——design value of bending strength of steel.

When the ratio of the free outstand of the compression flange to its thickness is larger than $13\sqrt{235/f_y}$, but not exceeding $15\sqrt{235/f_y}$, γ_x shall be taken as 1.0. f_y is the yield strength of the material indicated by the steel grade.

For beams requiring fatigue checking, $\gamma_x = \gamma_y = 1.0$ should be used.

4.1.2 The shear strength of solid web members bent in their principal plane shall be checked by the following formula (for members taking account of web post-buckling strength, see Clause 4.4.1 of this Code):

$$\tau = \frac{VS}{It_w} \leqslant f_v \tag{4.1.2}$$

where V——shear force in the calculated section along the plane of web;

S——first moment about neutral axis of that part of the gross section above the location where shear stress is calculated;

I——moment of inertia of gross section;

t_w——web thickness;

f_v——design value of shear strength of steel.

4.1.3 When a concentrated load is acting along the web plane on the upper flange of the beam, and that no bearing stiffener is provided at the loading location, the local compressive stress of the web at the upper edge of its effective depth shall be computed as follows:

$$\sigma_c = \frac{\psi F}{t_w l_z} \leqslant f \tag{4.1.3-1}$$

where F——concentrated load, taking into account the dynamic factor in case of dynamic loading;

ψ——amplification coefficient of the concentrated load, $\psi = 1.35$ for heavy duty crane girder; $\psi = 1.0$ for other beams and girders;

l_z——assumed distribution length of the concentrated load on the upper edge of the effective web depth taken as:

$$l_z = a + 5h_y + 2h_R \tag{4.1.3-2}$$

a——bearing length of the concentrated load along the beam span, taken as 50mm for wheel loading on rail;

h_y——distance from the top of girders or beams to the upper edge of the effective web depth;

h_R——depth of the rail, $h_R = 0$ for beams without rail on top;

f——design value of compressive strength of steel.

At the beam support, when no bearing stiffener is provided, the local compressive stress in the web at its lower edge of effective depth shall also be checked by Formula (4.1.3-1), with ψ take as 1.0. The distribution length of the end reaction shall be determined with reference to Formula(4.1.3-2) and according to the dimensions of the support.

Note: The effective web depth h_0 is:

For rolled beams: the distance between the web toes of the fillets joining the web with the upper and lower flanges;

For welded girders: the depth of the web;

For riveted (or high-strength bolted) girders: the distance between the nearest gauge lines of rivets (or high-strength bolts) connecting the web with the upper and lower flanges (see Fig. 4.3.2).

4.1.4 In case comparatively large normal stress σ, shear stress τ, and local compressive stress σ_c(or comparatively large σ and τ)exist simultaneously at the edge of the effective web depth of build-up girders, e.g. at the intermediate support of a continuous girder or at a section where the flange changes its dimensions, the reduced stress shall be checked by the following expression:

$$\sqrt{\sigma^2 + \sigma_c^2 - \sigma\sigma_c + 3\tau^2} \leqslant \beta_1 f \tag{4.1.4-1}$$

where σ, τ, σ_c——normal stress, shear stress and local compressive stress occurring simultaneously at a same point on the edge of effective web depth. τ and σ_c are calculated by Formulae (4.1.2) and (4.1.3-1) respectively, while σ is determined as follows:

$$\sigma = \frac{M}{I_n} y_1 \tag{4.1.4-2}$$

σ and σ_c are taken as positive while being tensile and negative while compressive;

I_n——moment of inertia of the net beam section;

y_1——distance from the calculated point to the neutral axis of the beam section;

β_1——amplification coefficient of design value of strength for reduced stress, $\beta_1 = 1.2$ when σ and σ_c are of different signs, $\beta_1 = 1.1$ when σ and σ_c are of the same sign or when $\sigma_c = 0$.

4.2 Overall stability

4.2.1 Calculation of the overall stability of the beams may not be needed when one of the following situations takes place:

1 A rigid decking (reinforced concrete slab or steel plate) is securely connected to the compression flange of the beam and capable of preventing its lateral deflection;

2 The ratio of the unsupported length, l_1, of the compression flange of a simply supported rolled H- or uniform I-section beam to its flange width, b_1, does not exceed the values given in Table 4.2.1.

Table 4.2.1 Maximum l_1/b_1 values of simply supported rolled H- or uniform I-section beams to avoid checking for overall stability

Steel grade	Beams without intermediate lateral support, load acting at		Beams with intermediate lateral support, load acting anywhere
	the upper flange	the lower flange	
Q235	13.0	20.0	16.0
Q345	10.5	16.5	13.0
Q390	10.0	15.5	12.5
Q420	9.5	15.0	12.0

Note: The maximum l_1/b_1 values of beams made of steel grade other than those shown in Table 4.2.1 shall be that of Q235 steel multiplied by $\sqrt{235/f_y}$.

For beams devoid of lateral support within the span, l_1 is the span length; for those provided with lateral supports within the span, l_1 is the distance between these supports (beam bearings are considered as supports).

4.2.2 Except for the situations specified in Clause 4.2.1, members bent in their principal plane of largest rigidity shall be checked for overall stability as follows:

$$\frac{M_x}{\varphi_b W_x} \leqslant f \tag{4.2.2}$$

where M_x——maximum bending moment about the strong axis;

W_x——gross section modulus of the beam with respect to compression fibers;

φ_b——overall stability factor determined according to Appendix B.

4.2.3 Except for the situations specified in Clause 4.2.1, H-and I-section members bent in their two principal planes shall be checked for overall stability as follows:

$$\frac{M_x}{\varphi_b W_x} + \frac{M_y}{\gamma_y W_y} \leqslant f \tag{4.2.3}$$

where W_x, W_y——gross section moduli about x-and y-axes with respect to compression fibers;

φ_b——overall stability factor for members bent about the strong axis, same as in Clause 4.2.2.

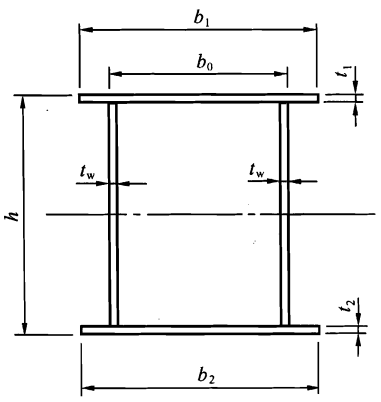

Fig.4.2.4 Box-section

4.2.4 Simply supported box section beams not conforming to the first situation specified in Clause 4.2.1 shall have their cross section dimension (Fig.4.2.4) meeting the relationships $h/b_0 \leqslant 6$ and $l_1/b_0 \leqslant 95(235/f_y)$.

Simply supported box section beams fulfilling the above requirement may not be checked for overall stability.

4.2.5 Detailing measures shall be taken to prevent twisting of the section at beam end supports.

4.2.6 Lateral bracings for reducing the unsupported length of the compression flange of a beam shall have their axial force determined in accordance to Clause 5.1.7 by considering the compression flange as an axially loaded compression member.

4.3 Local stability

4.3.1 Built-up girders subject to static or indirect dynamic loading should take account of web post-buckling strength with their bending and shear capacities checked in accordance with section 4.4; crane girders and similar nembers subject to direct dynamic loading, or other girders not taking account of post-buckling strength, shall be provided with stiffeners in accordance with Clause 4.3.2. In case $h_0/t_w > 80\sqrt{235/f_y}$, web stability shall be checked according to the requirements of Clauses 4.3.3 through 4.3.5.

In checking the web stability of light and medium duty crane girders, the design value of crane wheel load may be multiplied by a reduction factor 0.9.

4.3.2 Stiffeners shall be provided for webs of built-up girders in accordance with the following provisions (Fig.4.3.2):

1 When $h_0/t_w \leqslant 80\sqrt{235/f_y}$, transverse stiffeners shall be provided for girders with local comressive stress($\sigma_c \neq 0$) in accordance with detailing requirements, but may not be provided for girders without local compressive stress($\sigma_c = 0$).

2 Transverse stiffeners shall be provided in case $h_0/t_w > 80\sqrt{235/f_y}$, among which, when $h_0/t_w > 170\sqrt{235/f_y}$ (twisting of compression flange is restrained, such as connected with rigid slab, surge plate or welded-on rail) or $h_0/t_w > 150\sqrt{235/f_y}$ (twisting of compression flange not restrained), or demanded by calculation, longitudinal stiffeners shall be added in the compression zone of large flexural stress panels. For girders with

considerable local compressive stress, additional short stiffeners should also be provided if necessary.

h_0/t_w shall in no case exceed 250.

In the above, h_0 is the effective web depth (for monosymmetric girders, h_0 shall be taken as twice the height of compression zone h_c in judging whether longitudinal stiffeners are necessary), t_w is the web thickness.

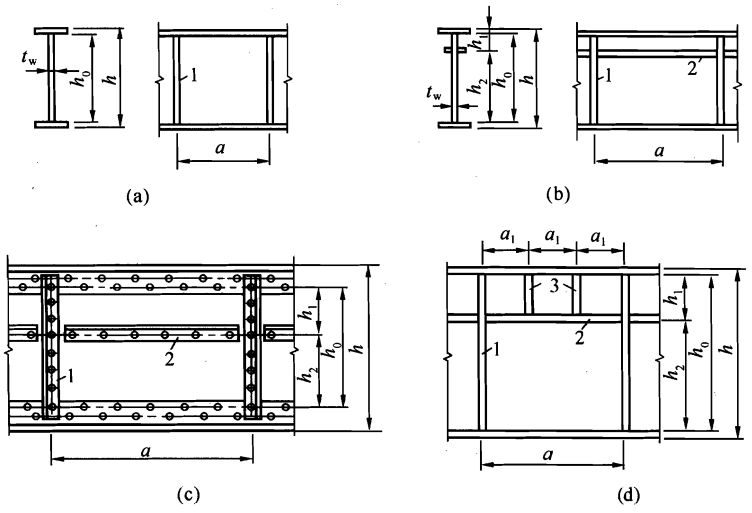

Fig. 4.3.2 Layout of stiffeners

1—transverse stiffeners; 2—longitudinal stiffeners; 3—short stiffeners

3 Bearing stiffeners shall be provided at girder supports and anywhere a fixed and comparatively large concentrated load is applied on the upper flange.

4.3.3 Panels of girder webs provided solely with transverse stiffeners (Fig. 4.3.2a) shall be checked for local stability by the following expression:

$$\left(\frac{\sigma}{\sigma_{cr}}\right)^2 + \left(\frac{\tau}{\tau_{cr}}\right)^2 + \frac{\sigma_c}{\sigma_{c,cr}} \leqslant 1 \qquad (4.3.3\text{-}1)$$

where σ——bending compressive stress at the edge of effective depth of the web caused by the average bending moment in the calculated web panel;

τ——mean shear stress of the web caused by the average shear force in the calculated web panel, $\tau = V/(h_w t_w)$, h_w being the web depth.

σ_c——local compressive stress at the edge of effective depth of the web, calculated with Formula (4.1.3-1), but taking $\psi = 1.0$;

$\sigma_{cr}, \tau_{cr}, \sigma_{c,cr}$——critical value of bending-, shear- and local compressive stress, acting individually and calculated as follows:

1) σ_{cr} is calculated with the following formulae:

When $\lambda_b \leqslant 0.85$

$$\sigma_{cr} = f \qquad (4.3.3\text{-}2a)$$

When $0.85<\lambda_b\leqslant 1.25$

$$\sigma_{cr} = [1 - 0.75(\lambda_b - 0.85)]f \tag{4.3.3-2b}$$

When $\lambda_b > 1.25$

$$\sigma_{cr} = 1.1f/\lambda_b^2 \tag{4.3.3-2c}$$

where λ_b——normalized depth-thickness ratio for calculation of webs subject to flexion;

When twisting of the girder compression flange is restrained:

$$\lambda_b = \frac{2h_c/t_w}{177}\sqrt{\frac{f_y}{235}} \tag{4.3.3-2d}$$

When twisting of the girder compression flange is not restrained:

$$\lambda_b = \frac{2h_c/t_w}{153}\sqrt{\frac{f_y}{235}} \tag{4.3.3-2e}$$

where h_c——the height of bending compression zone of girder web, $2h_c = h_0$ for doubly symmetric section.

2) τ_{cr} is calculated with the following formulae:

When $\lambda_s \leqslant 0.8$

$$\tau_{cr} = f_v \tag{4.3.3-3a}$$

When $0.8<\lambda_s\leqslant 1.2$

$$\tau_{cr} = [1 - 0.59(\lambda_s - 0.8)]f_v \tag{4.3.3-3b}$$

When $\lambda_s > 1.2$

$$\tau_{cr} = 1.1f_v/\lambda_s^2 \tag{4.3.3-3c}$$

where λ_s——normalized depth-thickness ratio for calculation of webs subject to shear.

When $a/h_0 \leqslant 1.0$

$$\lambda_s = \frac{h_0/t_w}{41\sqrt{4 + 5.34(h_0/a)^2}}\sqrt{\frac{f_y}{235}} \tag{4.3.3-3d}$$

When $a/h_0 > 1.0$

$$\lambda_s = \frac{h_0/t_w}{41\sqrt{5.34 + 4(h_0/a)^2}}\sqrt{\frac{f_y}{235}} \tag{4.3.3-3e}$$

3) $\sigma_{c,cr}$ is calculated with the following formulae:

When $\lambda_c \leqslant 0.9$

$$\sigma_{c,cr} = f \tag{4.3.3-4a}$$

When $0.9<\lambda_c\leqslant 1.2$

$$\sigma_{c,cr} = [1 - 0.79(\lambda_c - 0.9)]f \tag{4.3.3-4b}$$

When $\lambda_c > 1.2$

$$\sigma_{c,cr} = 1.1f/\lambda_c^2 \tag{4.3.3-4c}$$

where λ_c——normalized depth-thickness ratio for calculation of webs under localized compression.

When $0.5 \leqslant a/h_0 \leqslant 1.5$

$$\lambda_c = \frac{h_0/t_w}{28\sqrt{10.9 + 13.4(1.83 - a/h_0)^3}}\sqrt{\frac{f_y}{235}} \qquad (4.3.3\text{-}4d)$$

When $1.5 < a/h_0 \leqslant 2.0$

$$\lambda_c = \frac{h_0/t_w}{28\sqrt{18.9 - 5a/h_0}}\sqrt{\frac{f_y}{235}} \qquad (4.3.3\text{-}4e)$$

4.3.4 Webs strengthened simultaneously with transverse and longitudinal stiffeners (Fig.4.3.2b,c) shall be checked for local stability by the following expressions:

1 Panels between compression flange and longitudinal stiffener

$$\frac{\sigma}{\sigma_{cr1}} + \left(\frac{\tau}{\tau_{cr1}}\right)^2 + \left[\frac{\sigma_c}{\sigma_{c,cr1}}\right]^2 \leqslant 1.0 \qquad (4.3.4\text{-}1)$$

where σ_{cr1}, τ_{cr1}, $\sigma_{c,cr1}$ are calculated as follows:

1) σ_{cr1} is calculated with formulae (4.3.3-2), but λ_b thereof is replaced by λ_{b1}.

When twisting of the girder compression flange is restrained:

$$\lambda_{b1} = \frac{h_1/t_w}{75}\sqrt{\frac{f_y}{235}} \qquad (4.3.4\text{-}2a)$$

When twisting of the girder compression flange is not restrained:

$$\lambda_{b1} = \frac{h_1/t_w}{64}\sqrt{\frac{f_y}{235}} \qquad (4.3.4\text{-}2b)$$

where h_1——distance from the longitudinal stiffener to the compressive edge of the effective web depth.

2) τ_{cr1} is given by Formulae (4.3.3-3), but replacing h_0 thereof by h_1.

3) $\sigma_{c,cr1}$ is given by Formulae (4.3.3-2), but replacing λ_b thereof by λ_{c1}.

When twisting of the girder compression flange is restrained:

$$\lambda_{c1} = \frac{h_1/t_w}{56}\sqrt{\frac{f_y}{235}} \qquad (4.3.4\text{-}3a)$$

When twisting of the girder compression flange is not restrained:

$$\lambda_{c1} = \frac{h_1/t_w}{40}\sqrt{\frac{f_y}{235}} \qquad (4.3.4\text{-}3b)$$

2 Panels between tension flange and the longitudinal stiffeners:

$$\left[\frac{\sigma_2}{\sigma_{cr2}}\right]^2 + \left(\frac{\tau}{\tau_{cr2}}\right)^2 + \frac{\sigma_{c2}}{\sigma_{c,cr2}} \leqslant 1.0 \qquad (4.3.4\text{-}4)$$

where σ_2——web bending compressive stress at the location of the longitudinal stiffener caused by the average bending moment in the calculated panel;

σ_{c2}——transverse compressive stress of the web at the location of longitudinal stiffener, taken as $0.3\,\sigma_c$.

1) σ_{cr2} is given by formulae (4.3.3-2), but replacing λ_b thereof by λ_{b2}.

$$\lambda_{b2} = \frac{h_2/t_w}{194}\sqrt{\frac{f_y}{235}} \qquad (4.3.4\text{-}5)$$

2) τ_{cr2} is given by Formulae (4.3.3-3), but replacing h_0 thereof by $h_2(h_2 = h_0 - h_1)$.

3) $\sigma_{c,cr2}$ is given by Formulae(4.3.3-4), but replacing h_0 thereof by h_2, take $a/h_2 = 2$ when $a/h_2 > 2$.

4.3.5 Local stability of panels provided with short stiffeners between compression flange and longitudinal stiffeners (Fig.4.3.2d) is checked by Formula(4.3.4-1), where σ_{cr1} is calculated in accordance with paragraph 1) in section 1 of Clause 4.3.4; τ_{cr1} is given by Formulae (4.3.3-3), but replacing h_0 and a thereof by h_1 and a_1 respectively (a_1 is the spacing of short stiffeners); $\sigma_{c,cr1}$ is given by Formulae (4.3.3-2), but replacing λ_b thereof by λ_{c1} given by the following

When twisting of the compression flange is restrained:

$$\lambda_{c1} = \frac{a_1/t_w}{87}\sqrt{\frac{f_y}{235}} \qquad (4.3.5a)$$

When twisting of the compression flange is not restrained:

$$\lambda_{c1} = \frac{a_1/t_w}{73}\sqrt{\frac{f_y}{235}} \qquad (4.3.5b)$$

For panels with $a_1/h_1 > 1.2$, the right side of Eqs (4.3.5) shall be multiplied by $1/(0.4 + 0.5a_1/h_1)^{\frac{1}{2}}$.

4.3.6 Stiffeners should preferably be placed in pairs on each side of the web. Stiffeners on one side of the web are also allowed except for bearing stiffeners and stiffeners of heavy duty crane girders.

The minimum spacing of the transverse stiffeners is $0.5h_0$, the maximum spacing is $2h_0$ ($2.5h_0$ may be used for girders without local compressive stress when $h_0/t_w \leqslant 100$). Longitudinal stiffeners shall be located within a distance $h_c/2.5 \sim h_c/2$ from the compressive edge of the web effective depth.

Transverse stiffeners in pairs, made of flats, shall satisfy the following requirements:

outstanding width:

$$b_s \geqslant \frac{h_0}{30} + 40 \quad (\text{mm}) \qquad (4.3.6\text{-}1)$$

thickness

$$t_s \geqslant \frac{b_s}{15} \qquad (4.3.6\text{-}2)$$

The outstanding width of transverse stiffeners on one side shall be larger than 1.2 times that obtained from Formula (4.3.6-1). Its thickness shall not be less than 1/15 of the outstanding width.

For webs strengthened simultaneously by transverse and longitudinal stiffeners, the

dimensions of the transverse stiffener shall not only meet the above requirements but its moment of inertia, I_z, shall also conform to the following requirement:

$$I_z \geqslant 3h_0 t_w^3 \tag{4.3.6-3}$$

The moment of inertia of the longitudinal stiffener shall satisfy the following requirement:

$$I_y \geqslant 1.5h_0 t_w^3, \text{when} \frac{a}{h_0} \leqslant 0.85 \tag{4.3.6-4a}$$

$$I_y \geqslant \left(2.5 - 0.45\frac{a}{h_0}\right)\left(\frac{a}{h_0}\right)^2 h_0 t_w^3, \text{when} \frac{a}{h_0} > 0.85 \tag{4.3.6-4b}$$

The minimum spacing of short stiffeners is $0.75h_1$. Their outstanding width shall be 0.7~1.0 times that of the transverse stiffeners, their thickness shall not be less than 1/15 of the outstanding width.

Note: 1 Stiffeners made of structural shapes (H-and I-section, channel, angle with leg tip welded to the web) shall have a moment of inertia not less than that of the flat stiffeners.

2 The moment of inertia of stiffeners in pairs shall be computed about the center line of the web.

3 The moment of inertia of stiffeners on one side shall be computed about the edge line of the web where the stiffener is connected.

4.3.7 The bearing stiffeners of girders shall be checked for buckling resistance about the web axis as an axially loaded strut subjected to end reaction or fixed concentrated load. The cross-section of this strut shall comprise that of the stiffener plus a portion of the web $15t_w\sqrt{235/f_y}$ in width on each side of the stiffener. The effective length of the strut shall be taken equal to h_0.

End bearing strength shall be checked in accordance with the end reaction or concentrated fixed load acting thereon when the end of a bearing stiffener is planed and closely fitted (extended flanged stiffener shall furthermore meet the requirement of Clause 8.4.12); weld strength shall be checked according to force transfer when the end is welded.

Weld connecting bearing stiffener to girder web shall be calculated according to the requirement of force transmission.

4.3.8 The ratio of the free outstands of a compression flange, b, to its thickness, t, shall satisfy the following requirement:

$$\frac{b}{t} \leqslant 13\sqrt{\frac{235}{f_y}} \tag{4.3.8-1}$$

b/t may be enlarged to $15\sqrt{235/f_y}$, if the bending strength of the girder is computed with $\gamma_x = 1.0$.

The ratio of the compression flange width, b_0, of a box girder between two web plates to its thickness, t, shall satisfy the following requirement:

$$\frac{b_0}{t} \leqslant 40\sqrt{\frac{235}{f_y}} \tag{4.3.8-2}$$

When longitudinal stiffeners are provided for the compression flange of the box girder, b_0 in Formula (4.3.8-2) shall be the flange unsupported width between web and longitudinal stiffener.

Note: The free outstand b of the flange shall be taken as follows: the distance from the face of the web to the flange tip for welded members; the distance from the toe of the fillet to the flange tip for rolled members.

4.4 Calculation of built-up girder with webs taking account of post-buckling strength

4.4.1 I-section welded girders, whose web has only bearing stiffeners (or has intermediate transverse stiffeners as well), shall be checked for their bending and shear capacity as follows when taking account of post-buckling strength:

$$\left(\frac{V}{0.5V_u}-1\right)^2+\frac{M-M_f}{M_{eu}-M_f}\leqslant 1 \tag{4.4.1-1}$$

$$M_f=\left(A_{f1}\frac{h_1^2}{h_2}+A_{f2}h_2\right)f \tag{4.4.1-2}$$

where M、V——design value of bending moment and shear force occurring simultaneously at a same section of girder, take $V=0.5V_u$ when $V<0.5V_u$ and take $M=M_f$ when $M<M_f$;

M_f——design value of bending moment that the two flanges of the girder are capable to bear;

A_{f1}, h_1——cross-section area of the larger flange and the distance from its centroid to the neutral axis of the girder;

A_{f2}, h_2——cross-section area of the smaller flange and the distance from its centroid to the neutral axis of the girder;

M_{eu}, V_u——design value of bending capacity and shear capacity of the girder respectively.

1 M_{eu} shall be determined from the following:

$$M_{eu}=\gamma_x\alpha_e W_x f \tag{4.4.1-3}$$

$$\alpha_e=1-\frac{(1-\rho)h_c^3 t_w}{2I_x} \tag{4.4.1-4}$$

where α_e——reduction factor of section modulus of the girder taking account of the effective height of the web;

I_x—— moment inertia about x-axis of girder assuming the whole section effective;

h_c——the height of compressive zone of the web assuming the whole section effective;

γ_x——plasticity adaptation factor of the girder section;

ρ——effective height factor of web compressive zone.

When $\lambda_b \leqslant 0.85$

$$\rho = 1.0 \tag{4.4.1-5a}$$

When $0.85 < \lambda_b \leqslant 1.25$

$$\rho = 1 - 0.82(\lambda_b - 0.85) \tag{4.4.1-5b}$$

When $\lambda_b > 1.25$

$$\rho = \frac{1}{\lambda_b}\left(1 - \frac{0.2}{\lambda_b}\right) \tag{4.4.1-5c}$$

where λ_b—— normalized depth-thickness ratio for calculation of webs subject to flexion, determined by Eqs(4.3.3-2d) and (4.3.3-2e).

2 V_u shall be determined by the following:

When $\lambda_s \leqslant 0.8$

$$V_u = h_w t_w f_v \tag{4.4.1-6a}$$

When $0.8 < \lambda_s \leqslant 1.2$

$$V_u = h_w t_w f_v [1 - 0.5(\lambda_s - 0.8)] \tag{4.4.1-6b}$$

When $\lambda_s > 1.2$

$$V_u = h_w t_w f_v / \lambda_s^{1.2} \tag{4.4.1-6c}$$

where λ_s—— normalized depth-thickness ratio for calculation of webs subject to shear, determined by Eqs(4.3.3-3d) and (4.3.3-3e).

When stiffeners are provided only at the supports of the built-up girder, take $h_0/a = 0$in the Eq (4.3.3-3e).

4.4.2 If the requirement of Eq (4.4.1-1) can not be satisfied by providing stiffeners solely at the supports, intermediate transverse stiffeners shall be added in pair on the two side of the web. Intermediate transverse stiffeners including those subject to concentrate compression on top, besides conforming to the requirement of Eqs(4.3.6-1)and (4.3.6-2), shall be checked as axially loaded strut for buckling resistance out of the web plane with reference to Clause 4.3.7. The axial compression shall be given by the following:

$$N_s = V_u - \tau_{cr} h_w t_w + F \tag{4.4.2-1}$$

where V_u——as calculated by Eq(4.4.1-6);

h_w——depth of the web plate;

τ_{cr}——as calculated by Eq(4.3.3-3);

F—— concentrated compression acting at the top of intermediate bearing stiffeners.

When the web panel adjoining the support takes account of the post-buckling strength, that is when $\lambda_s > 0.8$, the stiffener at the support is subject to the horizontal component H of the tension field in addition to the end reaction of the girder and shall be checked for strength and stability out of the web plane as a beam-column.

$$H = (V_u - \tau_{cr} h_w t_w)\sqrt{1 + (a/h_0)^2} \tag{4.4.2-2}$$

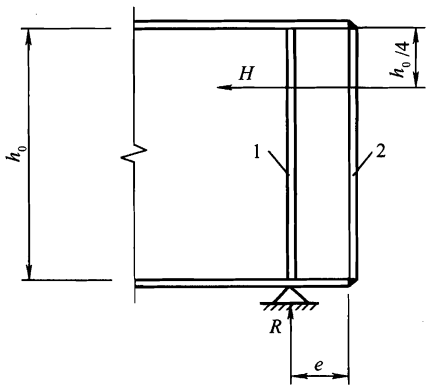

Fig.4.4.2 Twin stiffeners end post of girders

a is equal to the stiffener spacing of the end panel when intermediate transverse stiffeners are provided. a is equal to the distance from the girder support to the section of zero shear when no intermediate stiffeners are provided.

The point of application of H is situated at a distance equal to $h_0/4$ from the upper edge of web plate effective depth. The cross-section and the effective length of this beam-column are the same as common end stiffeners. When twin stiffeners end post is used as shown in Fig.4.4.2, the following simplified method may be adopted: stiffener 1 is checked as an axially loaded strut subject to end reaction R, and the cross-sectional area of the end covering stiffener 2 shall not be less than the following:

$$A_c = \frac{3h_0H}{16ef} \tag{4.4.2-3}$$

Note: 1 Depth-thickness ratio of the web plate shall not exceed 250.

2 For girders taking account of web post-buckling strength, intermediate transverse stiffeners may be provided in conforming to detailing requirement.

3 Webs with sparse stiffeners ($a>2.5h_0$) and those without intermediate transverse stiffeners, may take $H=0$ in case Formula (4.3.3-1) is satisfied.

5 Calculation of axially loaded members and members subjected to combined axial load and bending

5.1 Axially loaded members

5.1.1 The strength of members subject to axial tension or compression, except at high strength bolted friction-type connections, shall be checked as follows:

$$\sigma = \frac{N}{A_n} \leqslant f \tag{5.1.1-1}$$

where N——axial tension or compression;

A_n——net sectional area.

The strength of member at a high-strength bolted friction-type connection shall be checked by the following formulae:

$$\sigma = \left(1 - 0.5\frac{n_1}{n}\right)\frac{N}{A_n} \leqslant f \tag{5.1.1-2}$$

and

$$\sigma = \frac{N}{A} \leqslant f \tag{5.1.1-3}$$

where n——number of high-strength bolts of one end of the member at a joint or a splice;

n_1——number of high-strength bolts on the calculated section (outermost line of bolts);

A——gross sectional area of the member.

5.1.2 The stability of axial compression solid web members shall be checked as follows:

$$\frac{N}{\varphi A} \leqslant f \tag{5.1.2-1}$$

where φ——stability factor of axial compression members (lesser factor about the two principal axes), which shall be taken from Appendix C in accordance with the slenderness ratio, the yield strength and the classification of sections in Tables 5.1.2-1 and 5.1.2-2.

Table 5.1.2-1 Classification of sections of axial compression members (thickness of plate elements $t<40$mm)

Shape of section	About x-axis	About y-axis
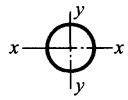 Rolled	Class a	Class a

Table 5.1.2-1(Continued)

<table>
<tr><th>Shape of section</th><th>About x-axis</th><th>About y-axis</th></tr>
<tr><td>Rolled, $b/h \leqslant 0.8$</td><td>Class a</td><td>Class b</td></tr>
<tr><td>Rolled, $b/h > 0.8$
Welded, with flame-cut flange edges
Welded
Rolled
Rolled equal-leg angle
Rolled, welded (width-thickness ratio of plate elements>20)
Rolled or welded
Welded
Rolled section and welded section with flame-cut flange edges
Latticed
Welded, with flame-cut plate edges</td><td>Class b</td><td>Class b</td></tr>
<tr><td>Welded, with rolled or sheared flange edges</td><td>Class b</td><td>Class c</td></tr>
<tr><td>Welded, with plate edges rolled or sheared
Welded, with wall width-thickness-ratio $\leqslant 20$</td><td>Class c</td><td>Class c</td></tr>
</table>

Table 5.1.2-2 Classification of sections of axial compression members (thickness of plate elements $t \geqslant 40$mm)

Shape of section			About x-axis	About y-axis
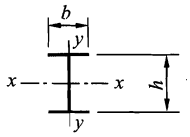	Rolled I- or H-section	$t<80$mm	Class b	Class c
		$t\geqslant 80$mm	Class c	Class d
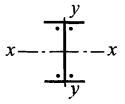	Welded I-section	Flame-cut flanges	Class b	Class b
		Rolled or sheared flanges	Class c	Class d
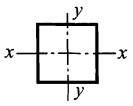	Welded box section	Wall width-thickness ratio>20	Class b	Class b
		Wall width-thickness ratio≤20	Class c	Class c

The slenderness ratio of members, λ, shall be determined according to the following:

1 For members of doubly symmetric or polar-symmetric section:

$$\lambda_x = l_{0x}/i_x \quad \lambda_y = l_{0y}/i_y \tag{5.1.2-2}$$

where l_{0x}, l_{0y}——member effective length about the principal axis x and y respectively;

i_x, i_y——radius of gyration of member section about principal axis x and y respectively.

For members of doubly symmetric cruciform section, λ_x or λ_y shall not be less than $5.07\,b/t$ (b/t being width-thickness ratio of the outstand).

2 For members of monosymmetric section, λ_x shall be calculated by (5.1.2-2) for checking the buckling resistance about the non-symmetric axis and the following equivalent slenderness ratio shall be used in lieu of λ_y for checking the buckling resistance about the axis of symmetry:

$$\lambda_{yz} = \frac{1}{\sqrt{2}}\left[(\lambda_y^2 + \lambda_z^2) + \sqrt{(\lambda_y^2 + \lambda_z^2)^2 - 4(1 - e_0^2/i_0^2)\lambda_y^2\lambda_z^2}\,\right]^{1/2} \tag{5.1.2-3}$$

$$\lambda_z^2 = i_0^2 A/(I_t/25.7 + I_\omega/l_\omega^2) \tag{5.1.2-4}$$

$$i_0^2 = e_0^2 + i_x^2 + i_y^2$$

where e_0——distance between centroid and shear centre of the section;

i_0——polar radius of gyration about the shear centre of the section;

λ_y——member slenderness about the axis of symmetry;

λ_z——equivalent slenderness ratio for torsional buckling;

I_t——torsional moment of inertia of the gross section;

I_ω——sectorial moment of inertia of the gross section, may be taken as $I_\omega = 0$ for T-sections (rolled, welded with plates or composed of two angles), cruciform and angle sections;

A——area of the gross section;

l_ω——effective length for torsional buckling, take $l_\omega = l_{0y}$ for hinged-hinged members with end sections free to warp or fixed-fixed members with end warping fully restrained.

3 For single angle section and double angle compound T-section, λ_{yz} about the axis of symmetry may be determined by the following simplified approach:

1) Single equal-leg angle section (Fig. 5.1.2a):

When $b/t \leqslant 0.54 l_{0y}/b$

$$\lambda_{yz} = \lambda_y \left(1 + \frac{0.85 b^4}{l_{0y}^2 t^2}\right) \tag{5.1.2-5a}$$

When $b/t > 0.54 l_{0y}/b$

$$\lambda_{yz} = 4.78 \frac{b}{t} \left(1 + \frac{l_{0y}^2 t^2}{13.5 b^4}\right) \tag{5.1.2-5b}$$

where b, t——angle leg width and thickness respectively.

2) Double equal-leg angle section (Fig. 5.1.2b):

When $b/t \leqslant 0.58 l_{0y}/b$

$$\lambda_{yz} = \lambda_y \left(1 + \frac{0.475 b^4}{l_{0y}^2 t^2}\right) \tag{5.1.2-6a}$$

When $b/t > 0.58 l_{0y}/b$

$$\lambda_{yz} = 3.9 \frac{b}{t} \left(1 + \frac{l_{0y}^2 t^2}{18.6 b^4}\right) \tag{5.1.2-6b}$$

3) Double unequal-leg angle section with short leg outstanding (Fig. 5.1.2c):

When $b_2/t \leqslant 0.48 l_{0y}/b_2$

$$\lambda_{yz} = \lambda_y \left(1 + \frac{1.09 b_2^4}{l_{0y}^2 t^2}\right) \tag{5.1.2-7a}$$

When $b_2/t > 0.48 l_{0y}/b_2$

$$\lambda_{yz} = 5.1 \frac{b_2}{t} \left(1 + \frac{l_{0y}^2 t^2}{17.4 b_2^4}\right) \tag{5.1.2-7b}$$

4) Double unequal-leg angle section with long leg outstanding (Fig. 5.1.2d):

Take approximately $\lambda_{yz} = \lambda_y$ when $b_1/t \leqslant 0.56\ l_{0y}/b_1$. If not the case, take

$$\lambda_{yz} = 3.7 \frac{b_1}{t} \left(1 + \frac{l_{0y}^2 t^2}{52.7 b_1^4}\right)$$

4 Axially compressed members of monosymmetric section buckling about any axis other than the non-symmetric principal axis, shall be checked as flexural-torsional buckling

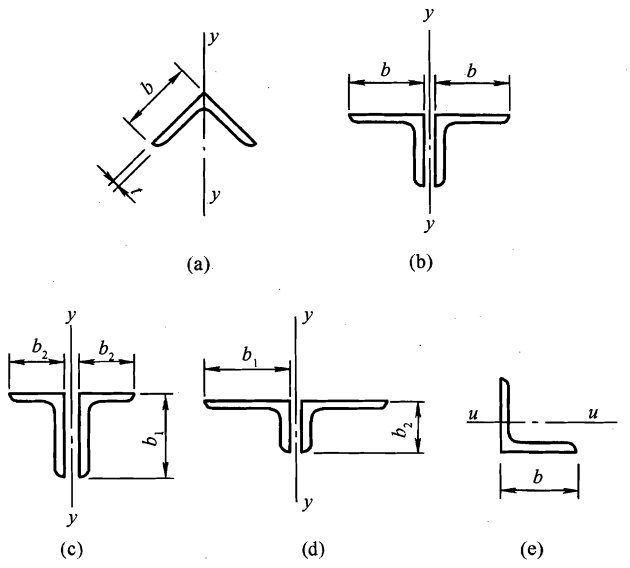

Fig.5.1.2 Single angle section and double angle compound T-section
b—width of equal-leg angle; b_1—longer leg width of unequal-leg angle;
b_2—shorter leg width of unequal-leg angle

problem. For single angle members buckling about an axis parallel to one leg (u-axis in Fig.5.1.2e), the equivalent slenderness ratio λ_{uz} may be calculated by the following, and the φ factor determined as a class b section:

When $b/t \leqslant 0.69 l_{0u}/b$

$$\lambda_{uz} = \lambda_u \left(1 + \frac{0.25 b^4}{l_{0u}^2 t^2}\right) \tag{5.1.2-8a}$$

When $b/t > 0.69 l_{0u}/b$

$$\lambda_{uz} = 5.4 \frac{b}{t} \tag{5.1.2-8b}$$

where $\lambda_u = l_{0u}/i_u$; l_{0u} is the effective length of the member about the u-axis, i_u is the radius of gyration of the member about the u-axis.

Note :1 sections having neither axis of symmerty nor pole of symmetry are not suited for axially compressed member (except single unequal leg angles connected by one leg).

2 Torsional effect may not be taken into account for single angle axially compressed members connected by one leg, as long as the design value of strength is multiplied by the reduction factor according to Clause 3.4.2.

3 Channels used as component of laced or battened members, need not take account of the torsional effect when calculating stability about their axis of symmetry (y-axis), and their factor φ_y may be obtained directly by λ_y.

5.1.3 The stability of laced or battened members in axial compression shall still be checked by Formula(5.1.2-1), but using the equivalent slenderness ratio for buckling about the open web axis (x-axis in Fig.5.1.3a and x-and y-axis in Fig.5.1.3b,c).

The equivalent slenderness ratio shall be computed as follows:

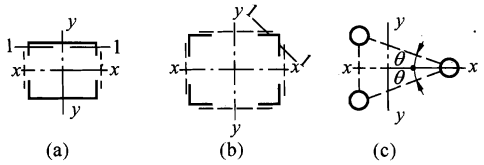

Fig. 5.1.3 Section of laced or battened members

1 Members built-up of two components (Fig. 5.1.3a):

For battened members

$$\lambda_{0x} = \sqrt{\lambda_x^2 + \lambda_1^2} \qquad (5.1.3\text{-}1)$$

For laced members

$$\lambda_{0x} = \sqrt{\lambda_x^2 + 27\frac{A}{A_{1x}}} \qquad (5.1.3\text{-}2)$$

where λ_x——slenderness ratio of the whole member about the x-axis;

λ_1—— slenderness ratio of the components about their weak axis 1-1, the unsupported length taken equal to the clear spacing of battens for welded members, and equal to the distance between end bolts of adjacent battens for bolted members;

A_{1x}——sum of gross sectional area of the lacings perpendicular to the x-axis in a section of the member.

2 Members built-up of four components(Fig. 5.1.3b):

For battened members

$$\lambda_{0x} = \sqrt{\lambda_x^2 + \lambda_1^2} \qquad (5.1.3\text{-}3)$$

$$\lambda_{0y} = \sqrt{\lambda_y^2 + \lambda_1^2} \qquad (5.1.3\text{-}4)$$

For laced members

$$\lambda_{0x} = \sqrt{\lambda_x^2 + \frac{40A}{A_{1x}}} \qquad (5.1.3\text{-}5)$$

$$\lambda_{0y} = \sqrt{\lambda_y^2 + \frac{40A}{A_{1y}}} \qquad (5.1.3\text{-}6)$$

where λ_x——slenderness ratio of the whole member about the y-axis;

A_{1y}——sum of gross sectional area of the lacings perpendicular to the y-axis in a section of the member.

3 Laced members with three components (Fig. 5.1.3c):

$$\lambda_{0x} = \sqrt{\lambda_x^2 + \frac{42A}{A_1(1.5 - \cos^2\theta)}} \qquad (5.1.3\text{-}7)$$

$$\lambda_{0y} = \sqrt{\lambda_y^2 + \frac{42A}{A_1\cos^2\theta}} \qquad (5.1.3\text{-}8)$$

where A_1——sum of gross sectional area of all the lacings in a section of the member;

θ——angle between a lacing plane and the x-axis in a section of the member.

Note: 1 The linear stiffness of the battens shall conform to the requirements of Clause 8.4.1.

2 The angle between the lacing and the member axis shall be within the range of 40°～70°.

5.1.4 The slenderness ratio of the components, λ_1, of laced members in axial compression shall not exceed 0.7 times λ_{max}, which is the larger of slenderness ratios of the members in two directions (the equivalent slenderness ratio shall be taken for open-web axis); λ_1 of battened members in axial compression shall not exceed 40 nor 0.5 λ_{max} (λ_{max} is taken equal to 50 in case it is less than 50).

5.1.5 Members composed of twin angles or twin channels separated by fillers may be considered as solid ones in calculation provided that the spacing of the fillers is less than:

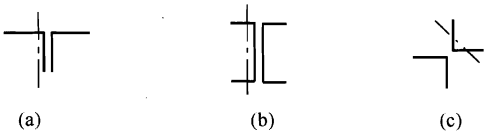

Fig.5.1.5 Axis for computing i

$40i$ for compression members

$80i$ for tension members

where i is the radius of gyration of one component and shall be taken as follows:

1 i is taken about the centroidal axis parallel to the fillers when the twin angles or channels are combined as shown in Fig.5.1.5a,b.

2 i is taken about the weak axis when the two angles are combined in a cruciform section as shown in Fig.5.1.5c.

The number of fillers of a compression member between two adjacent laterally supported points shall not be less than 2.

5.1.6 The shear force of axial compression members shall be computed according to the following:

$$V = \frac{Af}{85}\sqrt{\frac{f_y}{235}} \tag{5.1.6}$$

The shear force V may be considered as constant along the member length.

The shear force V shall be distributed to relevant lacing or batten planes (also to planes of solid plate element if there exists any) for laced or battened members in axial compression.

5.1.7 Bracing bars, used for reducing the unsupported length of axial compression members, and whose axis passes by the shear centre of the braced members, shall be proportioned to carry an axial force in the direction of buckling by the following:

1 Single brace supporting a single column of height l

For mid-height bracing

$$F_{b1} = N/60 \tag{5.1.7-1a}$$

For bracing distant αl from column end($0<\alpha<1$)

$$F_{b1} = \frac{N}{240\alpha(1-\alpha)} \tag{5.1.7-1b}$$

where N—maximum axial compression of the braced member.

2 For multiple equidistant braces supporting a single column of height l (the bracing spacing may be unequal, but the difference between any spacing and the average value does

not exceed 20%), the force in each of the m-braces is:

$$F_{bm} = N/[30(m+1)] \tag{5.1.7-2}$$

3 For mid-height brace supporting a row of columns:

$$F_{bn} = \frac{\sum N_i}{60}(0.6+0.4/n) \tag{5.1.7-3}$$

where n——number of braced columns in the row;

$\sum N_i$——sum of axial compressions acting simultaneously on the braced columns.

4 The brace forces given above may not be additive to the forces in the bracing generated by the effect of other actions on the structure.

5.2 Members subjected to combined axial load and bending

5.2.1 The strength of members subjected to combined axial load and moments acting in principal planes shall be checked as follows:

$$\frac{N}{A_n} \pm \frac{M_x}{\gamma_x W_{nx}} \pm \frac{M_y}{\gamma_y W_{ny}} \leqslant f \tag{5.2.1}$$

where γ_x, γ_y——plasticity adaptation factors relevant to section modulus and given in Table 5.2.1.

Table 5.2.1 Plasticity adaptation factors of cross-sections γ_x, γ_y

Item No.	Cross-sectional shapes	γ_x	γ_y
1	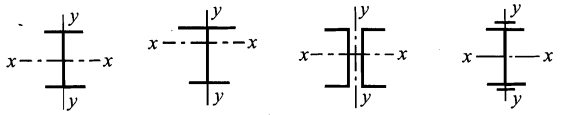	1.05	1.2
2	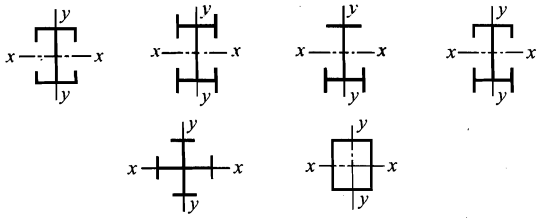		1.05
3	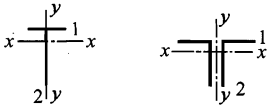		1.2
4	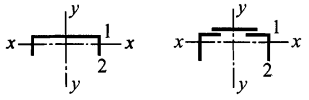	$\gamma_{x1}=1.05$ $\gamma_{x2}=1.2$	1.05

Table 5.2.1(Continued)

Item No.	Cross-sectional shapes	γ_x	γ_y
5	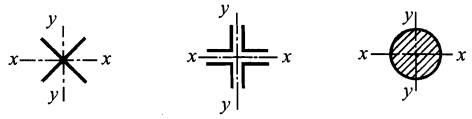	1.2	1.2
6	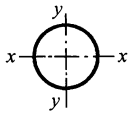	1.15	1.15
7	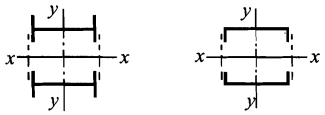	1.0	1.05
8	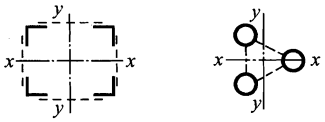		1.0

When the ratio of free outstand of the compression flange of a beam-column to its thickness is larger than $13\sqrt{135/f_y}$, but not exceeding $15\sqrt{235/f_y}$, γ_x shall be taken as 1.0.

For members, subject to axial load and bending, requiring fatigue checking, γ_x and γ_y should be taken as 1.0.

5.2.2 Solid web beam-columns bent in their plane of symmetric axis (about x-axis) shall have their stability checked as follows:

1 In-plane stability:

$$\frac{N}{\varphi_x A}+\frac{\beta_{mx}M_x}{\gamma_x W_{1x}\left(1-0.8\dfrac{N}{N'_{Ex}}\right)}\leqslant f \qquad (5.2.2\text{-}1)$$

where N——axial compression in the calculated portion of the member;

N'_{Ex}——parameter, $N'_{Ex}=\pi^2 EA/(1.1\lambda_x^2)$;

φ_x——stability factor of axial compression members buckling in the plane of bending;

M_x——maximum moment in the calculated portion of the member;

W_{1x}——gross section modulus referred to the more compressed fiber in the plane of bending;

β_{mx}——factor of equivalent moment, taken as follows:

1) For columns of frames and for members supported at the two ends:

①In the case of no transverse load: $\beta_{mx} = 0.65 + 0.35M_2/M_1$, where M_1 and M_2 are end moments taken as of same sign for members bent in single curvature (without in flexion point) and of different signs for members bent in reverse curvatures (with inflexion point), $|M_1| \geqslant |M_2|$;

②In the case of having end moments combined with transverse load: $\beta_{mx} = 1.0$ for members bent in single curvature and $\beta_{mx} = 0.85$ for members bent in reverse curvatures;

③In the case of having transverse loads and no end moments: $\beta_{mx} = 1.0$.

2) For cantilevers, columns of pure frame not taking account of 2nd order effect in stress analysis and columns of frame with weak bracings, $\beta_{mx} = 1.0$.

Beam-columns of singly symmetric sections shown in Item No 3 and 4 of Table 5.2.1 shall be checked by the following formula in addition to Formula (5.2.2-1) in case the bending moment in the plane of symmetric axis causes compression on the flange:

$$\left| \frac{N}{A} - \frac{\beta_{mx} M_x}{\gamma_x W_{2x}\left(1 - 1.25\dfrac{N}{N'_{Ex}}\right)} \right| \leqslant f \qquad (5.2.2\text{-}2)$$

where W_{2x}——gross section modulus referred to the flangeless edge.

2 Out-of-plane stability:

$$\frac{N}{\varphi_y A} + \eta \frac{\beta_{tx} M_x}{\varphi_b W_{1x}} \leqslant f \qquad (5.2.2\text{-}3)$$

where φ_y——stability factor of axial compression members buckling out of the plane of M_x, determined in accordance with Clause 5.1.2;

φ_b——overall stability factor of beams under uniform bending, determined in accordance with Appendix B, among which, Clause B.5 may be used For I-(H-) and T-section noncantilever members; for box section, use $\varphi_b = 1.0$;

M_x——maximum moment in the calculated member portion;

η——factor of section effect, taken as $\eta = 0.7$ for box section and $\eta = 1.0$ for others;

β_{tx}——factor of equivalent moment, taken as follows:

1) For members with lateral supports, β_{tx} shall be determined according to loading and internal force situation in the member portion between two adjacent supporting points as follows:

①In the case of no transverse load within the calculated portion: $\beta_{tx} = 0.65 + 0.35M_2/M_1$, where M_1 and M_2 are end moments in the plane of bending, taken as of same sign for member portions bent in a single curvature and of different signs for member portions bent in reverse curvatures; $|M_1| \geqslant |M_2|$;

②In the case of having end moments combined with transverse loads within the calculated portion: $\beta_{tx} = 1.0$ for member portions bent in single curvature, $\beta_{tx} =$

0.85 for those bent in reverse curvatures;

③In the case of having transverse loads and no end moment within the calculated portion: $\beta_{tx}=1.0$.

2) For members acting as cantilevers out of the plane of bending $\beta_{tx}=1.0$.

5.2.3 Laced or battened beam-columns bent about the open web axis (x-axis) shall be checked for in-plane stability by the following formula:

$$\frac{N}{\varphi_x A}+\frac{\beta_{mx}M_x}{W_{1x}\left(1-\varphi_x\frac{N}{N'_{Ex}}\right)}\leqslant f \tag{5.2.3}$$

where $W_{1x}=\frac{I_x}{y_0}$, I_x being the moment of inertia of the gross area about the x-axis, y_0 being the distance from the x-axis to the axis of the more compressed component or to the outside face of web of this component, whichever is larger; φ_x and N'_{Ex} shall be determined using the equivalent slenderness ratio.

The overall out-of-plane stability of the member may not be checked in this case, but the stability of components shall be checked. The axial force of these components shall be determined as in the chords of trusses. For battened columns, bending of the components due to shear force shall be taken into account.

5.2.4 Laced or battened beam-columns bent about the solid web axis shall have their in-plane and out-of-plane stability checked in the same way as solid web members, but the equivalent slenderness ratios shall be used for out-of-plane overall stability calculation and φ_b taken as 1.0.

5.2.5 Doubly symmetrical I-(H-) and box (closed) section beam-columns bent in two principal planes, shall be checked for stability by the following formulae:

$$\frac{N}{\varphi_x A}+\frac{\beta_{mx}M_x}{\gamma_x W_x\left(1-0.8\frac{N}{N'_{Ex}}\right)}+\eta\frac{\beta_{ty}M_y}{\varphi_{by}W_y}\leqslant f \tag{5.2.5-1}$$

$$\frac{N}{\varphi_y A}+\eta\frac{\beta_{tx}M_x}{\varphi_{bx}W_x}+\frac{\beta_{my}M_y}{\gamma_y W_y\left(1-0.8\frac{N}{N'_{Ey}}\right)}\leqslant f \tag{5.2.5-2}$$

where φ_x, φ_y——stability factors of axial compression members about the strong axis x-x and the weak axis y-y;

$\varphi_{bx}, \varphi_{by}$——overall stability factors of beams under uniform bending: for I-(H-) section non-cantilever members, φ_{bx} may be determined in accordance with Section B.5 of Appendix B, φ_{by} may be taken as 1.0; for box section, $\varphi_{bx}=\varphi_{by}=1.0$;

M_x, M_y——maximum bending moment about the strong and the weak axes in the calculated member portion;

N'_{Ex}, N'_{Ey}——parameters, $N'_{Ex}=\pi^2EA/(1.1\lambda_x^2)$, $N'_{Ey}=\pi^2EA/(1.1\lambda_y^2)$;

W_x, W_y——gross section moduli about the strong and the weak axes;

β_{mx}, β_{my}——factors of equivalent moment used for calculation of in-plane stability in accordance with Clause 5.2.2;

β_{tx}, β_{ty}——factors of equivalent moment used for calculation of out-of-plane stability in accordance with Clause 5.2.2.

5.2.6 The stability of laced (or battened) beam-columns with two components bent in two principal planes shall be checked as follows:

1 Overall stability:

$$\frac{N}{\varphi_x A} + \frac{\beta_{mx} M_x}{W_{1x}\left(1 - \varphi_x \frac{N}{N'_{Ex}}\right)} + \frac{\beta_{ty} M_y}{W_{1y}} \leqslant f \qquad (5.2.6\text{-}1)$$

where W_{1y}——gross section modulus referred to the more compressed fiber under the action of M_y.

2 Component stability:

The axial force of a component due to N and M_x shall be determined as in the chord member of a truss. M_y shall be distributed to two components according to Formulae(5.2.6-2) and (5.2.6-3) (see Fig. 5.2.6). The stability of the components shall then be checked according to Clause 5.2.2.

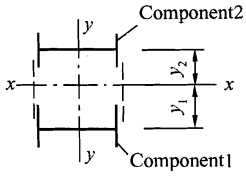

Fig.5.2.6 Section of laced or battened member

Component 1:

$$M_{y1} = \frac{I_1/y_1}{I_1/y_1 + I_2/y_2} M_y \qquad (5.2.6\text{-}2)$$

Component 2:

$$M_{y2} = \frac{I_2/y_2}{I_1/y_1 + I_2/y_2} M_y \qquad (5.2.6\text{-}3)$$

where I_1, I_2——moment of inertia about the y-axis of components 1 and 2;

y_1, y_2——distances from x-x axis to the centroidal axis of components 1 and 2.

5.2.7 The lacing bars or battens of beam-columns shall be checked by using the actual shear force of the member or the shear force given by Formula(5.1.6), whichever is larger.

5.2.8 Bracing bars for reducing the lateral unsupported length of a beam-column out of the plane of bending shall have their axial force determined according to Clause 5.1.7 by considering the compression flange (for solid web members) or the compression component (for laced or battened members)as an axial compression member.

5.3 Effective length and allowable slenderness ratio

5.3.1 The effective length l_0 of chord members and single system web members (connected to chord members through gusset plate) of trusses shall be taken as those given in Table 5.3.1.

Table 5.3.1 Effective length l_0 of truss chords and single system web members

Item No.	Direction of bending	Chord members	Web members	
			End posts	Other web members
1	In truss plane	l	l	$0.8l$
2	Out of truss plane	l_1	l	l
3	In skew plane	—	l	$0.9l$

Note: 1 l—geometric length of the member (distance between panel points); l_1—distance between laterally supported points of chord members.

2 The skew plane refers to the plane oblique to the truss plane. It is applicable to web members with single angle and double angle cruciform section whose principal planes are non-coincident with truss plane.

3 For web members without gusset plate, the effective length in any plane shall be their geomeric length (excepting tubular structures).

If the distance between laterally supported points of compression chord of a truss is equal to twice the panel length (Fig. 5.3.1) and the two panels have unequal compressive forces, the effective length for out-of-plane buckling shall be taken as (but not less than $0.5l_1$):

$$l_0 = l_1\left(0.75 + 0.25\frac{N_2}{N_1}\right) \quad (5.3.1)$$

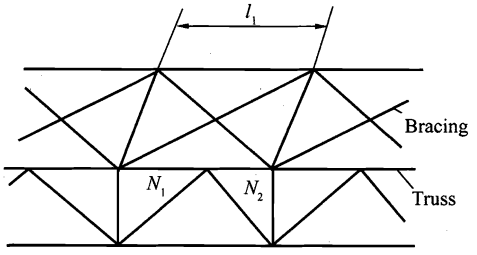

Fig. 5.3.1 Chord member of truss with unequal axial compression between laterally supported points

where N_1——the larger compressive force, taken as positive;

N_2—— the smaller compressive force or tensile force, taken as positive for compression and negative for tension.

The main compression diagonals in subdivided web member system and the verticals in K-web member system shall also have their out-of-plane effective length determined by Formula (5.3.1) (this length shall be l_1 for main tension diagonals), while their in-plane effective length shall be taken as distance between adjacent joints.

5.3.2 The effective length of cross diagonals interconnected at the intersection point shall be taken as the distance from a panel point to the crossing point for in-plane buckling, whereas for out-of-plane buckling, in the case of diagonals of equal length, it shall be taken as prescribed in the following:

1 Diagonal in compression.

1) In case the intersecting diagonal, is also in compression and that both diagonals, identical in section, are not interrupted at the crossing point:

$$l_0 = l\sqrt{\frac{1}{2}\left(1 + \frac{N_0}{N}\right)}$$

2) In case the intersecting diagonal is also in compression, but interrupted and spliced by a gusset plate at the crossing point:

$$l_0 = l\sqrt{1 + \frac{\pi^2}{12} \cdot \frac{N_0}{N}}$$

3) In case the intersecting diagonal is in tension and that both diagonals, identical in section, are not interrupted at the crossing point:

$$l_0 = l \cdot \sqrt{\frac{1}{2}\left(1 - \frac{3}{4} \cdot \frac{N_0}{N}\right)} \geqslant 0.5l$$

4) In case the intersecing diagonal is in tension, but interrupted and spliced by a gusset plate at the crossing point:

$$l_0 = l \cdot \sqrt{1 - \frac{3}{4} \cdot \frac{N_0}{N}} \geqslant 0.5l$$

In case this tension diagonal is continuous but the compression diagonal is interrupted and spliced by a gusset plate, and that $N_0 \geqslant N$ or the tension diagonal has its out-of-plane rigidity $EI_y \geqslant \frac{3N_0 l^2}{4\pi^2}\left(\frac{N}{N_0} - 1\right)$, take $l_0 = 0.5l$ for the compression diagonal.

In the above formulae, l denotes distance between panel points of the truss (the crossing point is not counted in); N and N_0 denote respectively the force in the diagonal under consideration, and that in the intersecting diagonal, both in absolute value. When both diagonals are in compression, and have identical section, take $N_0 \leqslant N$.

2 Diagonal in tension, l_0 shall be taken equal to l.

The effective length of single angle cross diagonals in skew plane shall be taken as the distance between a panel point and the crossing point.

5.3.3 The in-plane effective length of uniform section columns of single-or multiple-story frames shall be taken as the product of the column length (story height) by an effective length factor μ. Frames are classified as pure frame without bracing and braced frame. The latter is subdivided into strongly braced and weakly braced ones according to the stiffness against lateral translation.

1 Pure frames.

1) In case internal forces are computed by first-order elastic analysis, the column effective length factor μ shall be determined in accordance with Table D-2 in Appendix D as a frame with sidesway.

2) In case internal forces are computed by second-order elastic analysis, and that notional horizontal forces H_{ni} determined by Eq(3.2.8-1) are applied at the top of each story, take $\mu = 1.0$.

2 Braced frames.

1) In case the sway stiffness S_b (horizontal force that causes a leaning angle of unity) of the bracing system (bracing truss, shear wall, elevator shaft) satisfies the requirement of the Formula(5.3.3-1), the frame is recognized as strongly braced, and the effective length factor μ of its columns shall be detemined in accordance with Table D-1 in Appendix D as a frame without sidesway.

$$S_b \geqslant 3(1.2\sum N_{bi} - \sum N_{0i}) \qquad (5.3.3\text{-}1)$$

where $\sum N_{bi}$, $\sum N_{0i}$——sum of the load carrying capacity of all the columns in the i-th story calculated by making use of effective length factor of frames without sidesway and with sidesway respectively.

2) In case the sway stiffness S_b of the bracing system does not satisfy the requirement of the Formula (5. 3. 3-1), the frame is recognized as weakly braced and the relevant stability factor φ of axial compression member shall be determined according to Eq (5.3.3-2).

$$\varphi = \varphi_0 + (\varphi_1 - \varphi_0)\frac{S_b}{3(1.2\sum N_{bi} - \sum N_{0i})} \qquad (5.3.3\text{-}2)$$

where φ_1, φ_0——the stability factor of axially loaded columns corresponding to column effective length factor of frames without and with sidesway respectively from Tables in Appendix D.

5.3.4 The in-plane effective length of a stepped column rigidly restrained at the base of a single-story mill building shall be determined as follows:

1 Single-stepped column:

1) Effective length factor μ_2 for the lower portion of the column:

For column pin-connected to the girder, μ_2 shall be the figures taken from Table D-3 (single stepped column with free upper end) in Appendix D, multiplied by an appropriate reduction factor given in Table 5.3.4. For columns rigidly connected to the girder, μ_2 shall be the figures taken from Table D-4 (single-stepped column with translation-free and rotation-fixed upper end) in Appendix D, multiplied by an appropriate reduction factor given in Table 5.3.4.

Table 5.3.4 Reduction factor for the effective length of stepped columns in single story mill building

Type of the mill building				Reduction factor
Number of bays	Number of columns in a longitudinal row within a section between expansion joints of the building	Roofing	Longitudinal horizontal bracing on the two sides of the roof system	
Single	≤6	—	—	0.9
	>6	Other than large-size precast R. C. roofing slab	not provided	
			provided	0.8
		Large-size precast R.C. roofing slab	—	
Multiple	—	Other than large-size precast R. C. roofing slab	not provided	
			provided	0.7
		Large-size precast R.C. roofing slab	—	

Note: The reduction factor 0.9 may be used for outdoor structures with girder (e.g. drop ball mill, etc.).

2) Effective length factor μ_1 for the upper portion of the column shall be calculated by the following formula:

$$\mu_1 = \frac{\mu_2}{\eta_1} \tag{5.3.4-1}$$

where η_1 is a parameter calculated by the formula shown in Table D-3 or D-4 in Appendix D.

2 Double-stepped column:

1) Effective length factor μ_3 of the lower portion of the column:

For columns pin-connected to the girder, μ_3 shall be the figures taken from Table D-5 (double-stepped column with free upper end), in Appendix D, multiplied by an appropriate reduction factor given in Table 5.3.4.

For columns rigidly connected to the girder, μ_3 shall be the figures taken from Table D-6 (double-stepped column with translation-free and rotation-fixed upper end), in Appendix D, multiplied by an appropriate reduction factor given in Table 5.3.4.

2) Effective length factors μ_1 and μ_2 for the upper and middle portions shall be calculated by the following formulae respectively:

$$\mu_1 = \frac{\mu_3}{\eta_1} \tag{5.3.4-2}$$

$$\mu_2 = \frac{\mu_3}{\eta_2} \tag{5.3.4-3}$$

where η_1 and η_2——parameters calculated by formulae shown in Tables D-5 and D-6 in Appendix D.

Note: For the effective length of tapered columns, refer to the current national standard "Technical code of cold-formed thin-wall steel structures" GB 50018.

5.3.5 In calculating the momemt of inertia of laced or battened columns of a frame and that of lattice girders(trusses), the influence of the variation of section depth of columns or girders and that of the deformation of lacing bars or batten plates(or web members) shall be taken into account.

5.3.6 Special consideration to be taken in determining the effective length factor of frame columns under the following situations:

1 The column slenderness ratio factor of pure frames and weakly braced frames adjoined with leaning columns (columns hinged at both ends) shall be multiplied by an amplification factor η:

$$\eta = \sqrt{1 + \frac{\sum(N_1/H_1)}{\sum(N_f/H_f)}} \tag{5.3.6}$$

where $\sum(N_f/H_f)$——summation of the ratio of the factored axial compression to column height of all the frame columns;

$\sum(N_1/H_1)$——summation of the ratio of factored axial compression to column height of all the leaning columns.

The effective length of leaning columns is equal to their geometric length.

2 When other columns in the same story of the calculated column, or columns continuous with it in the upper and lower story, have potential in load-carrying capacity, the effective length factor of the column may be reduced by taking into account the restraining effect of these adjacent columns; whereas the effective length factor of the latter should be enlarged.

3 For columns joining beams by semi-rigid connections, the effective length shall be determined by taking the behavior of the connections into consideration.

5.3.7 The effective length of frame columns in the longitudinal direction of the building (out of the frame plane) shall be taken as the distance between supporting points restraining the out-of-plane displacement.

5.3.8 The slenderness ratio of compression members should not exceed the allowable values given in Table 5.3.8.

Table 5.3.8 Allowable values of slenderness ratio for compression members

Item No.	Nomenclature of members	Allowable values
1	Columns, members of trusses and monitors. Lacing of columns, column bracings beneath crane girders or crane trusses	150
2	Bracings(except column bracings beneath crane girders or crane trusses). Members used to reduce the slenderness ratio of compression members	200

Note: 1 A slenderness ratio of 200 may be allowed for compression web members in trusses(including space trusses) when they are stressed to or under 50% of their capacities.

2 For single angle compression members, the least radius of gyration shall be used for calculation of slenderness ratio, but the radius of gyration about the axis parallel to the leg may be used for calculation of the out-of-plane slendemess ratio in the case of cross diagonals interconnected at the crossing point.

3 For trusses with span length equal to or larger than 60m, the allowable slenderness ratio should be taken as 100 for compression chords and end posts, and 150(when subjected to static or indirect dynamic load), or 120 (when subjected to direct dynamic load)for other web members in compression.

4 In case member section is governed by allowable slenderness ratio, the effect of twisting may be neglected in calculating the slendeness ratio.

5.3.9 The slenderness ratio of tension members should not exceed the allowable values given in Table 5.3.9.

Table 5.3.9 Allowable values of slenderness ratio for tension members

Item No.	Nomenclature of members	Structures subject to static or indirect dynamic loading		Structures subject to direct dynamic loading
		Common buildings	Mill buildings with heavy duty crane	
1	Members of Trusses	350	250	250

Table 5.3.9(Continued)

Item No.	Nomenclature of members	Structures subject to static or indirect dynamic loading		Structures subject to direct dynamic loading
		Common buildings	Mill buildings with heavy duty crane	
2	Column bracings beneath crane girders or crane trusses	300	200	—
3	Other tension members, bracings and ties (except pretensioned round bars)	400	350	—

Note: 1 For structures subject to static loading, slenderness ratio of tension members may be checked only in vertical planes.

2 For structures subject to direct or indirect dynamic loading, the slenderness ratio of a single angle tension member is calculated similarly to Note 2 of Table 5.3.8.

3 The slenderness ratio of bottom chord of crane trusses for medium and heavy duty cranes should not exceed 200.

4 In mill buildings equipped with soaking pit cranes and stripper cranes or rigid claw cranes, the slenderness ratio of the bracings(except Item No.2 in the Table)should not exceed 300.

5 When tension members change into compression ones under the combined action of dead and wind loads, their slenderness ratio should not exceed 250.

6 For trusses with span length equal to or larger than 60m, the slenderness ratio of tension chords and tension web members should not exceed 300 (when subjected to static or indirect dynamic loading) or 250 (when subjected to direct dynamic loading).

5.4 Local stability of compression members

5.4.1 The ratio of free outstand, b, of a flange to its thickness, t, in compression members shall conform to the following requirements:

1 Axial compression members:

$$\frac{b}{t} \leqslant (10 + 0.1\lambda)\sqrt{\frac{235}{f_y}} \qquad (5.4.1\text{-}1)$$

where λ——the larger of the slenderness ratios of the member in two directions, taken as 30 when $\lambda < 30$, and as 100 when $\lambda > 100$.

2 Beam-columns:

$$\frac{b}{t} \leqslant 13\sqrt{\frac{235}{f_y}} \qquad (5.4.1\text{-}2)$$

b/t may be enlarged to $15\sqrt{235/f_y}$ in case $\gamma_x = 1.0$ is used for strength and stability checking.

Note: The free outstand b of the flange shall be taken as follows: the distance from the face of the web to the flange tip for welded members; the distance from the toe of the fillet to the flange tip for rolled members.

5.4.2 The ratio of effective web depth, h_0, to thickness, t_w, in I-section compression members

shall conform to the following requirements:

1 Axial compression members:

$$\frac{h_0}{t_w} \leqslant (25 + 0.5\lambda)\sqrt{\frac{235}{f_y}} \qquad (5.4.2\text{-}1)$$

where λ——the larger of the slenderness ratios of the member in two directions, taken as 30 when $\lambda < 30$, and as 100 when $\lambda > 100$.

2 Beam-columns:

$$\frac{h_0}{t_w} \leqslant (16\alpha_0 + 0.5\lambda + 25)\sqrt{\frac{235}{f_y}}, \text{when} \quad 0 \leqslant \alpha_0 \leqslant 1.6 \qquad (5.4.2\text{-}2)$$

$$\frac{h_0}{t_w} \leqslant (48\alpha_0 + 0.5\lambda - 26.2)\sqrt{\frac{235}{f_y}}, \text{when} \quad 1.6 < \alpha_0 \leqslant 2 \qquad (5.4.2\text{-}3)$$

$$\alpha_0 = \frac{\sigma_{max} - \sigma_{min}}{\sigma_{max}}$$

where σ_{max}——maximum compressive stress on the edge of effective web depth, not taking account of the stability factor of the member, nor the plasticity adaptation factor of the section;

σ_{min}——corresponding stress on the other edge of effective web depth, taken as positive for compression and negative for tension;

λ——slenderness ratio in the plane of bending, taken as 30 when $\lambda < 30$ and as 100 when $\lambda > 100$.

5.4.3 The width-to-thickness ratio of the compression flanges in box section compression members shall conform to the requirement of Clause 4.3.8, whereas the ratio of the effective web depth, h_0, to thickness, t_w, shall conform to the following requirements:

1 For axial compression members:

$$\frac{h_0}{t_w} \leqslant 40\sqrt{\frac{235}{f_y}} \qquad (5.4.3)$$

2 For beam-columns, the ratio h_0/t_w shall not exceed 0.8 times the right-hand side of Formula(5.4.2-2)or(5.4.2-3), but not less than $40\sqrt{235/f_y}$.

5.4.4 The depth-to-thickness ratio of the web in T-section compression members shall not exceed the following values:

1 Axial compression members and beam-columns in which bending moment causes tension on the free edge of the web:

For hot-rolled cut-T section: $(15+0.2\lambda)\sqrt{235/f_y}$

For welded T-section: $(13+0.17\lambda)\sqrt{235/f_y}$

2 Beam-columns, in which bending moment causes compression on the free edge of the web:

$15\sqrt{235/f_y}$, when $\alpha_0 \leqslant 1.0$

$18\sqrt{235/f_y}$, when $\alpha_0 > 1.0$

λ and α_0 are taken according to Clauses 5.4.1 and 5.4.2 respectively.

5.4.5 The ratio of outside diameter to wall thickness of circular tubes subject to compression shall not exceed $100(235/f_y)$.

5.4.6 When the web depth-to-thickness ratio of H-, I- and box-section compression members does not conform to the requirements of Clause 5.4.2 or 5.4.3, the web may be strengthened with longitudinal stiffeners, or otherwise only a width of $20t_w\sqrt{235/f_y}$ on each side of the web should be considered effective in calculation of the strength and stability of members (but the whole section is effective for determining the stability factor φ).

When longitudlinal stiffeners are provided, the portion of the web between the more compressed flange and the longitudinal stiffener shall have a depth-to-thickness ratio conforming to the requirement of Clause 5.4.2 or 5.4.3.

Longitudinal stiffeners should be placed in pair on the two sides of the web, with an outstanding width not less than $10t_w$ on each side, and thickness not less than $0.75t_w$.

6 Fatigue calculation

6.1 General stipulations

6.1.1 For steel structural members and their connections subject directly to repeated fluctuations of dynamic loading, fatigue calculation shall be carried out when the number of stress cycles, n, is equal to or greater than 5×10^4.

6.1.2 The provisions in this Chapter are not applicable to the fatigue calculation of structural members and their connections under special conditions(e. g. members subject to surface temperatures above 150℃, members in corrosive environments of sea water, residual stress relieved through post-weld heat treatment, low cycle-high strain fatigue, etc.).

6.1.3 The allowable stress range method is used in fatigue calculation, with stresses calculated in accordance with elastic state. The allowable stress ranges are determined in accordance with the detail categories of members and connections as well as the number of stress cycles. For the region of a member, where no tensile stress occurs in the stress cycles, fatigue calculation may not be needed.

6.2 Fatigue calculation

6.2.1 For constant amplitude fatigue (the stress range in all stress cycles remains constant) calculation shall be carried out by the following formula:

$$\Delta\sigma \leqslant [\Delta\sigma] \tag{6.2.1-1}$$

where $\Delta\sigma$——stress range for welded region, $\Delta\sigma = \sigma_{max} - \sigma_{min}$; reduced stress range for non-weld regions, $\Delta\sigma = \sigma_{max} - 0.7\sigma_{min}$;

σ_{max}——maximun tensile stress(taken as positive) of each stress cycle in the region considered;

σ_{min}——minimum tensile stress(taken as positive) of compressive stress(taken as negative) of each stress cycle in the region considered;

$[\Delta\sigma]$——allowable stress range(N/mm^2) of constant amplitude fatigue, and shall be calculated by the following formula:

$$[\Delta\sigma] = \left(\frac{C}{n}\right)^{\frac{1}{\beta}} \tag{6.2.1-2}$$

n——number of stress cycles;

C, β——parameters taken from Table 6.2.1 according to the detail category of members and connections in Appendix E.

Table 6.2.1 Parameters C, β

Detail category of members and connections	1	2	3	4	5	6	7	8
C	1940×10^{12}	861×10^{12}	3.26×10^{12}	2.18×10^{12}	1.47×10^{12}	0.96×10^{12}	0.65×10^{12}	0.41×10^{12}
β	4	4	3	3	3	3	3	3

Note: Formula(6.2.1-1) is also valid for shear stress.

6.2.2 For variable amplitude fatigue (the stress range in stress cycles varies at random), if the design stress spectrum composed of the frequency distribution of various loadings, the level of stress ranges and the sum of the frequency distributions during the service life of the structure could be predicted, then it may be reduced to equivalent constant amplitude fatigue, and calculated by the following formula:

$$\Delta\sigma_e \leqslant [\Delta\sigma] \tag{6.2.2-1}$$

where $\Delta\sigma_e$——equivalent stress range of variable amplitude fatigue, determined by the following formula:

$$\Delta\sigma_e = \left[\frac{\sum n_i(\Delta\sigma_i)^\beta}{\sum n_i}\right]^{1/\beta} \tag{6.2.2-2}$$

$\sum n_i$——expected service life of the structure expressed in number of stress cycles;

n_i——number of stress cycles with stress range level reaching $\Delta\sigma_i$ within the expected life.

6.2.3 The fatigue of crane girders for heavy duty cranes and crane trusses for both heavy and medium duty cranes may be regarded as constant amplitude fatigue and calculated by the following formula:

$$\alpha_f\Delta\sigma \leqslant [\Delta\sigma]_{2\times10^6} \tag{6.2.3}$$

where α_f——equivalent factor of underloading effect, adopted in accordance with Table 6.2.3-1;

$[\Delta\sigma]_{2\times10^6}$——allowable stress range corresponding to the number of cycles $n = 2\times10^6$, adopted in accordance with Table 6.2.3-2.

Table 6.2.3-1 Equivalent factor of underloading effect for crane girder and crane truss, α_f

Crane category	α_f
Heavy duty crane with rigid hook(e.g., soaking pit crane)	1.0
Heavy duty crane with flexible hook	0.8
Medium duty crane	0.5

Table 6.2.3-2 Allowable stress range(N/mm^2) corresponding to number of cycles $n = 2\times10^6$

Detail category of members and connections	1	2	3	4	5	6	7	8
$[\Delta\sigma]_{2\times10^6}$	176	144	118	103	90	78	69	59

Note: The allowable stress range given in the Table is calculated by Formula(6.2.1-2).

7 Calculation of connections

7.1 Welded connection

7.1.1 The quality level of welds shall be specified according to the structural importance, loading character, weld types, service conditions and stress states, and shall be selected by the following principles:

1 For butt welds subject to fatigue loading, full penetration shall be specified, and the weld quality level shall be:

1) For butt weld, or combined butt and fillet weld in T joint, with loading perpendicular to the weld length, class 1 weld shall be specified when loaded in tension, and class 2 weld shall be specified when loaded in compression;

2) For butt weld with loading parallel to the weld length, class 2 weld shall be specified.

2 For butt welds without fatigue loading, if the weld resistance is required to be equal to that of the parent metal, full penetration is required and the quality level shall not be lower than class 2 for welds in tension, and class 2 should be specified for welds in compression.

3 Full penetration shall be specified for the T joint between top flange and web of a crane girder, and for welds between top chord and gusset plate of a crane truss to carry heavy-duty crane or medium duty crane with lifting capacity $Q \geqslant 50$t. Normally combined butt and fillet welds in T joint shall be used and quality level shall not be lower than class 2.

4 For T joint with fillet weld or combined partial penetration butt and fillet weld, and for lap joint with fillet weld, the weld quality level shall be specified as follows:

1) For structures subject to dynamic and fatigue loading, and for crane girder to carry medium duty crane with lifting capacity $Q \geqslant 50$t, weld quality by visual inspection shall be class 2;

2) For other structures, weld quality by visual inspection may be class 3.

7.1.2 Capacity of butt weld, or combined butt and fillet weld in T joint shall be calculated as follows:

1 In butt joints and T joints, the design capacity of butt weld or combined butt and fillet weld when subject to axial tension or compression perpendicular to the weld, the following formula shall be satisfied:

$$\sigma = \frac{N}{l_w t} \leqslant f_t^w \quad \text{or} \quad f_c^w \tag{7.1.2-1}$$

where N——design value of axial tensile or compressive force;

l_w——effective weld length;

t——thickness of thinner plate in butt joint, or the web thickness in T joints;

f_t^w, f_c^w——design values of tensile and compressive strength of butt welds.

2 For the butt weld or combined butt and fillet weld in T joint subject to both bending moment and shear force, the normal stress and shear stress shall be calculated individually in butt joints and T joints. Where both the comparatively large normal stress and shear stress coexist(e.g. at the end of the transverse butt weld of a beam web splice), the reduced stress shall satisfy the following formula:

$$\sqrt{\sigma^2 + 3\tau^2} \leqslant 1.1 f_t^w \tag{7.1.2-2}$$

Notes: 1 When plates spliced with oblique butt weld, the weld capacity is adequate if θ, the angle between the applied force and weld, satisfies $\tan\theta \leqslant 1.5$;

2 When run-on and run-off tabs are not applied, $2t$ reduction shall be considered when calculating the effective weld length of a butt weld or combined butt and fillet weld in T joint.

7.1.3 The strength of right-angle fillet welds shall be calculated as follows:

1 Under the action of tensile, compressive or shear force passing through the centroid of the welds:

For the end-fillet weld(the force perpendicular to the weld length):

$$\sigma_f = \frac{N}{h_e l_w} \leqslant \beta_f f_f^w \tag{7.1.3-1}$$

For the side-fillet weld(the force parallel to the weld length):

$$\tau_f = \frac{N}{h_e l_w} \leqslant f_f^w \tag{7.1.3-2}$$

2 Under the combined actions of various forces, at the location of combined σ_f and τ_f:

$$\sqrt{\left(\frac{\sigma_f}{\beta_f}\right)^2 + \tau_f^2} \leqslant f_f^w \tag{7.1.3-3}$$

where σ_f——stress on the effective area (h_e l_w) of the weld, perpendicular to the weld length;

τ_f——shear stress on the effective area of the weld, parallel to the weld length;

h_e——throat thickness and taken as $0.7h_f$ for right-angle fillet weld, where h_f is the weld leg size(Fig. 7.1.3);

l_w——effective weld length, taken as actual weld length minus $2h_f$ for each weld;

β_f——enlargement coefficient for design value of end fillet strength, $\beta_f = 1.22$ for welds subject to static loading or dynamic loading indirectly, or $\beta_f = 1.0$ for welds subject to dynamic loading directly.

7.1.4 In T joints, when the angle α between the fusion faces of a oblique-angle fillet weld is more than 60° and less than 135°(Fig. 7.1.4), the capacity of the fillet weld shall satisfy Eq.(7.1.3-1)to(7.1.3-3), but using $\beta_f = 1.0$, and the throat thickness is taken as $h_e = h_f \cos\frac{\alpha}{2} \Big/ 2$(when root gap b, b_1 or $b_2 \leqslant 1.5$mm), or $h_e = \left[h_f - \frac{b(\text{or } b_1, b_2)}{\sin\alpha}\right]\cos\frac{\alpha}{2}$(when

b, $b_1$or b_2>1.5mm but≤5mm).

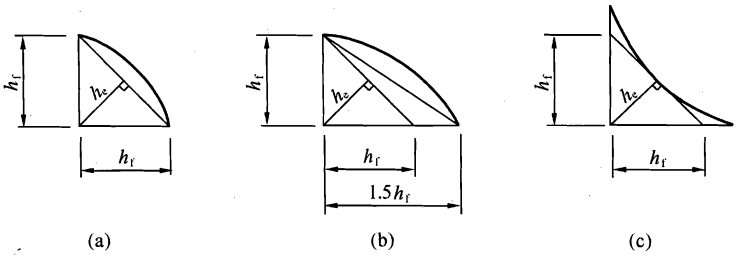

Fig. 7.1.3 Profile of right-angle fillet welds

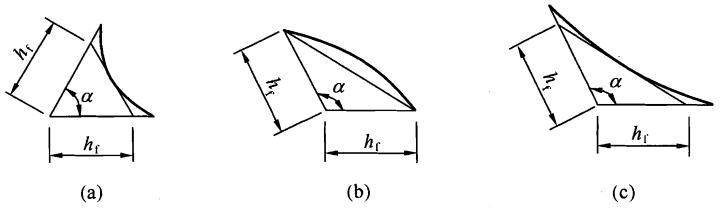

Fig. 7.1.4-1 Profile of oblique-angle fillet welds in T joint

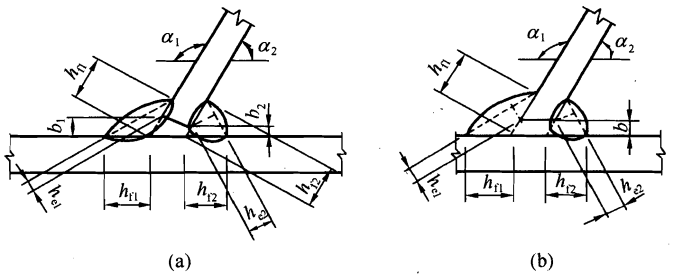

Fig. 7.1.4-2 Details of root gap and weld section in T joint

7.1.5 The strength of partially penetrated butt weld(Fig. 7.1.5a, b, d, e) and combined butt and fillet weld in T joints(Fig. 7.1.5c) shall satisfy Eq. (7.1.3-1) to(7.1.3-3). β_f = 1.22 when the applied compressive force is perpendicular to the weld length, otherwise β_f = 1.0. The throat thickness shall be determined as:

For V groove(Fig. 7.1.5a):

when $\alpha \geqslant 60°$, $h_e = s$;

when $\alpha < 60°$, $h_e = 0.75s$.

For single bevel or K groove(Fig. 7.1.5b, c), $h_e = s - 3$ when $\alpha = 45° \pm 5°$.

For U or J groove(Fig. 7.1.5d, e), $h_e = s$.

where s——groove depth, and is the shortest distance from the groove root to the weld surface(neglecting the weld reinforcement);

α——angle between the fusion faces of V, single bevel or K groove.

When the weld leg size on the fusion line is equal or approximate to the shortest

distance s(Fig. 7.1.5b,c,e), the design value of shear strength shall be taken as 0.9 times the design value of strength for fillet weld.

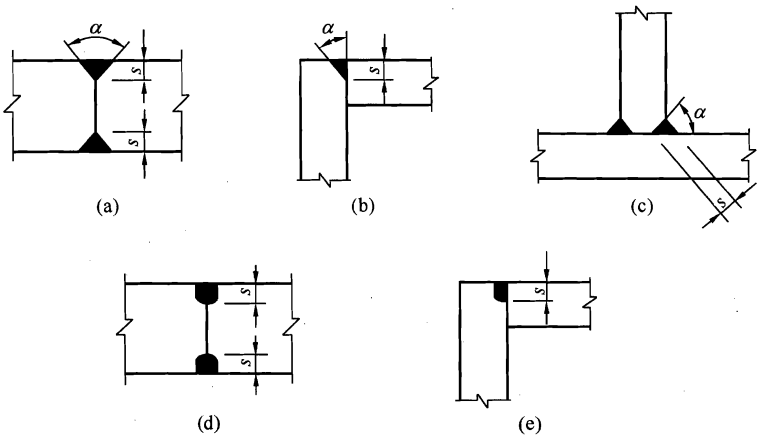

Fig. 7.1.5 Profile of partially penetrated butt welds, combined butt and fillet welds

7.2 Fastener (bolted and riveted) connection

7.2.1 The capacity of ordinary bolts, anchor bolts and rivets should be determined as follows:

1 In joints with ordinary bolts or rivets subject to shear force, the design capacity per ordinary bolt or rivet shall be taken as the lesser design value of shear capacity and bearing capacity.

The desing value of shear capacity:

For ordinary bolts:

$$N_v^b = n_v \frac{\pi d^2}{4} f_v^b \tag{7.2.1-1}$$

For rivets:

$$N_v^r = n_v \frac{\pi d_0^2}{4} f_v^r \tag{7.2.1-2}$$

The design value of bearing capacity:

For ordinary bolts:

$$N_c^b = d \sum t \cdot f_c^b \tag{7.2.1-3}$$

For rivets:

$$N_c^r = d_0 \sum t \cdot f_c^r \tag{7.2.1-4}$$

where n_v——number of shear plane;

d——bolt shank diameter;

d_0——rivet hole diameter;

$\sum t$——lesser sum of thickness of the connected plies bearing in the same direction;

f_v^b, f_c^b——design values of shear and bearing strength of the ordinary bolt respectively;

f_v^r, f_c^r——design values of shear and bearing strength of the rivet respectively.

2 In joints with ordinary bolts, anchor bolts or rivets subject to tension in shank axis direction, the design value of tension capacity per ordinary bolt, anchor bolt or rivet shall be determined as:

For ordinary bolts:

$$N_t^b = \frac{\pi d_e^2}{4} f_t^b \tag{7.2.1-5}$$

For anchor bolts:

$$N_t^a = \frac{\pi d_e^2}{4} f_t^a \tag{7.2.1-6}$$

For rivets:

$$N_t^r = \frac{\pi d_0^2}{4} f_t^r \tag{7.2.1-7}$$

where d_e——effective diameter of ordinary bolt or anchor bolt at threaded section;

f_t^b, f_t^a, f_t^r——design values of tensile strength of the ordinary bolt, anchor bolt or rivet respectively.

3 The ordinary bolts or rivets subject to combined action of shear and tension in the shank axis direction shall satisfy the following formulae:

For ordinary bolts:

$$\sqrt{\left(\frac{N_v}{N_v^b}\right)^2 + \left(\frac{N_t}{N_t^b}\right)^2} \leqslant 1 \tag{7.2.1-8}$$

$$N_v \leqslant N_c^b \tag{7.2.1-9}$$

For rivets:

$$\sqrt{\left(\frac{N_v}{N_v^r}\right)^2 + \left(\frac{N_t}{N_t^r}\right)^2} \leqslant 1 \tag{7.2.1-10}$$

$$N_v \leqslant N_c^r \tag{7.2.1-11}$$

where N_v, N_t——design values of shear and tensile force carried by an ordinary bolt or rivet respectively;

N_v^b, N_t^b, N_c^b——design values of shear, tensile and bearing capacity of an ordinary bolt respectively;

N_v^t, N_t^t, N_c^t——design values of shear, tensile and bearing capacity of a rivet respectively.

7.2.2 High strength bolt in friction type joint shall be calculated as follows:

1 The design capacity of a high strength bolt in shear connection shall be determined by:

$$N_v^b = 0.9 n_f \mu P \tag{7.2.2-1}$$

where n_f——number of load transmitting friction interface;

μ——slip coefficient at friction interface taken from Table 7.2.2-1;

P——pretension of a high strength bolt taken from Table 7.2.2-2.

Table 7.2.2-1 Slip coefficient μ at friction interface

Faying surface treatment	Steel grade of connected parts		
	Q235	Q345 and Q390	Q420
Blast-cleaning	0.45	0.50	0.50
Inorganic zinc paint coated after blast-cleaning	0.35	0.40	0.40
Rusted after blast-cleaning	0.45	0.50	0.50
Hand-cleaned with wire brush or untreated as rolled clean surfaces	0.30	0.35	0.40

Table 7.2.2-2 High strength bolt pretension P(kN)

Bolt property grade	Nominal bolt diameter(mm)					
	M16	M20	M22	M24	M27	M30
8.8	80	125	150	175	230	280
10.9	100	155	190	225	290	355

2 The design capacity of a high strength bolt subject to tension in bolt shank direction shall be taken as $N_t^b=0.8P$.

3 The high strength bolt in friction type joint subject to combined shear in friction interface and external tension action (in the direction of bolt shank axis)shall satisfy:

$$\frac{N_v}{N_v^b}+\frac{N_t}{N_t^b}\leqslant 1 \tag{7.2.2-2}$$

where N_v, N_t——design values of shear and tensile force carried by a high strength bolt;

N_v^b, N_t^b——design values of shear and tension capacity of a high strength bolt respectively.

7.2.3 High strength bolt in bearing type joint shall be calculated as follows:

1 The pretension P applied to a high strength bolt in bearing-type joint shall be the same as that in friction-type joint. The faying surface shall be free of grease or rust.

High strength bolt in bearing type joint shall not be applied to the structures directly subject to dynamic loading.

2 The design value of shear capacity of a high strength bolt in bearing-type joint is calculated as that of an ordinary bolt. When the threaded section is in shearing, the design value of shear capacity shall be calculated based on the effective area of the threaded section.

3 When a high strength bolt in bearing-type joint is subjected to tension in the direction of shank axis, the design value of tension capacity is determined as that of an ordinary bolt.

4 The high strength bolt in bearing type joint subject to combined shear and tension in the direction of shank axis shall satisfy the following formulae:

$$\sqrt{\left(\frac{N_v}{N_v^b}\right)^2+\left(\frac{N_t}{N_t^b}\right)^2}\leqslant 1 \tag{7.2.3-1}$$

$$N_v\leqslant N_c^b/1.2 \tag{7.2.3-2}$$

where N_v, N_t——design values of shear and tensile force carried by a high strength bolt;

N_v^b, N_t^b, N_t^c——design values of shear, tension and bearing capacity of a high strength bolt.

7.2.4 At the end connection of a member or at one side of member splice, when the connecting length l_1 in the direction of the force transfer is longer than $15d_0$, the design capacity of a bolt or a rivet shall be reduced through multiplying a reduction factor $\left(1.1-\frac{l_1}{150d_0}\right)$. In case of l_1 longer than $60d_0$, the reduction factor should be taken as 0.7, where d_0 is the bolt hole diameter.

7.2.5 Under the following circumstances, the number of bolts and rivets shall be increased:

1 When the members are connected through filler or packing plates, the number of bolts (except high strength bolts in friction-type joint) or rivets shall be 10% more than the calculated values.

2 For a lap joint or a joint with single splice plate transferring axial force, the number of bolts (except high strength bolts in friction-type joint) or rivets shall be 10% more than the calculated values to allow for the effects of bending caused by eccentricity.

3 At the end joint of a member where a lug angle is used to connect the outstands of angle or channel sections in order to reduce the joint length, the number of bolts or rivets allocated on one of the two legs of the lug angle shall be 50% more than the calculated values.

4 When the total grip thickness of riveted plates exceeds 5 times the rivet hole diameter, the number of rivets shall be increased by 1% for each additional 2mm grip (minimum 1 rivet), but the total grip should not exceed 7 times the rivet hole diameter.

7.2.6 The self-tapping screws, blind rivets and cartridge-fired pins for connecting thin-walled plates shall satisfy the stipulation specified in relevant standards.

7.3 Flange connection of built-up I-section (girder)

7.3.1 For fillet welds connecting the flange of a built-up I section to its web on both sides, the following formula shall be satisfied:

$$\frac{1}{2h_e}\sqrt{\left(\frac{VS_f}{I}\right)^2+\left(\frac{\psi F}{\beta_f l_z}\right)^2}\leqslant f_f^w \qquad (7.3.1)$$

where S_f——first moment of gross section of the flange about the neutral axis of the girder;

I——moment of inertia of the gross cross section of the girder.

F, ψ and l_z in Eq. (7.3.1) shall be determined in accordance with Clause 4.1.3 and β_f is defined in Clause 7.1.3.

Note: 1 When a fixed concentrated load is applied on the top flange of the girder, a bearing stiffener should be provided with its end tightly fitted to the top flange, so as to take $F=0$;

2 When the flange and web are connected by combined butt and fillet weld with full penetration, the resistance may not be calculated.

7.3.2 For rivets (or high strength bolts in friction type joints) connecting the flange of a built-up I section to its web, the following formula shall be satisfied:

$$a\sqrt{\left(\frac{VS_f}{I}\right)^2+\left[\frac{\alpha_1\psi F}{l_z}\right]^2}\leqslant n_1 N_{min}^r \text{ or } n_1 N_v^b \tag{7.3.2}$$

where a——spacing of rivets(or bolts)on flange;

α_1——a parameter, $\alpha_1=0.4$ when load F is acted on the top flange and the web edge tightly fitted to the top flange, otherwise $\alpha_1=1$;

n_1——number of rivets(or bolts)on the cross section;

N_{min}^r——lesser design value of shear capacity and bearing capacity of a rivet;

N_v^b——design value of shear capacity of a high strength bolt in friction-type joint.

Notes: when a fixed concentrated load is applied on the top fiange of the girder, a bearing stiffener should be provided with its end tightiy fitted to the top flange, so as to take $F=0$.

7.4 Beam-to-column rigid connection

7.4.1 In case of an I-section beam connected to a H-section column flange, if the beam flange is connected with full penetration T-butt weld and beam web is connected with weld or high strength bolt in friction-type joint, column web transverse stiffeners may not be provided if the following requirements are satisfied:

1 Where the beam flange is in compression, the column web thickness t_w shall simultaneously satisfy:

$$t_w\geqslant\frac{A_{fc}f_b}{b_e f_c} \tag{7.4.1-1}$$

$$t_w\geqslant\frac{h_c}{30}\sqrt{\frac{f_{yc}}{235}} \tag{7.4.1-2}$$

where A_{fc}——sectional area of beam flange in compression;

f_c——design value of tensile or compressive strength of column steel;

f_b——design value of tensile or compressive strength of beam steel;

b_e——assumed stress distribution length at the edge of the column effective web depth where a concentrated compressive force is applied perpendicularly to the column flange, referring to Eq. (4.1.3-2);

h_c——depth of column web;

f_{yc}——yielding strength of column steel.

2 Where the beam flange is in tension, the column flange thickness t_c shall satisfy:

$$t_c\geqslant 0.4\sqrt{A_{ft}f_b/f_c} \tag{7.4.1-3}$$

where A_{ft}——sectional area of beam flange in tension.

7.4.2 The column joint panel enclosed by the column flanges and web transverse stiffeners shall be calculated as follows:

1 The shear capacity shall satisfy:

$$\frac{M_{b1}+M_{b2}}{V_p}\leqslant\frac{4}{3}f_v \tag{7.4.2-1}$$

where M_{b1}, M_{b2}——design values of beam bending moment at the two sides of the joint;

V_p—— volume of joint panel, $V_p = h_b h_c t_w$ for I-or H-column and $V_p = 1.8 h_b h_c t_w$ for box column;

t_w——column web thickness;

h_b——beam web depth.

In case of joint panel not satisfying Eq. (7.4.2-1), the web thickness of a H-column or built-up I-column should be thickened. The thickened region shall cover not less than 150mm above the beam top flange and below the beam bottom flange. For hot-rolled H- or I-column, the column web may be also strengthened by welding supplementary plates. The supplementary plates may not extend beyond the web transverse stiffeners, or extend 150mm beyond the web stiffeners. The fillet welds connecting the supplementary plates and web stiffeners shall be designed to transfer the shear force shared by the supplementary plates, the throat thickness shall not be less than 5mm, In case of supplementary plates extending beyond the web stiffeners, the web stiffeners shall be welded to the supplementary plates only. The welds between the supplementary plates and web stiffeners shall be designed to transfer the shear force from the web stiffeners. The thickness of the supplementary plate and its weld shall be designed according to the acting force. The edge of the supplementary plate shall be connected to the column flange by fillet weld. Additional plug welds shall be provided to secure the integral junction of supplementary plates to the column web. The spacing between the centers of plugs shall not exceed 21 $\sqrt{235/f_y}$ times the thickness of the thinner part joined. For light structure, the diagonal stiffeners may be applied to reinforce the column web.

2 The web thickness t_w shall satisfy:

$$t_w \geqslant \frac{h_c + h_b}{90} \tag{7.4.2-2}$$

7.4.3 The column web transverse stiffeners applied at the beam-to-column joints shall satisfy the following:

1 The transverse stiffeners shall be able to resist and transmit the acting force transferred from the beam flange. The thickness of stiffeners shall be 0.5～1.0 times the thickness of beam flange. The width shall satisfy the requirements on force transmitting, detailing, and limiting width-to-thickness ratio.

2 The transverse stiffeners shall be located in alignment with the central axis of the beam flange and welded to the column flange with full penetration T-butt weld. When a beam is perpendicularly connected to the H- or I-column web and rigid connections are required, the web transverse stiffeners should be welded to the column web with full penetration T-butt weld.

3 The diaphragm stiffeners of a box column should be welded to the column flange with full penetration T-butt weld. In case electric arc welding is inaccessible, the consumable nozzle electroslag welding may be applied.

4 When diagonal stiffeners are applied to increase the shear capacity of the joint panel,

the stiffener and its connection shall be designed to carry the supplementary shear beyond the shear capacity of column web.

7.5 Calculation of connected plates at joints

7.5.1 The connected plate subject to tension and shear action at the joint shall satisfy the following formula:

$$\frac{N}{\sum(\eta_i A_i)} \leqslant f \tag{7.5.1-1}$$

$$\eta_i = \frac{1}{\sqrt{1 + 2\cos^2 \alpha_i}} \tag{7.5.1-2}$$

where N——tensile force acting on the connected plate;

A_i——area of ith failure section, $A_i = tl_i$, taking net sectional area for bolted (or riveted) connection;

t——thickness of connected plate;

l_i——length of ith failure line, taking the length of most critical failure line on the plate (Fig. 7.5.1);

η_i——equivalent coefficient for tension and shear action on the ith failure section;

α_i——angle between the axis of applied force and the ith failure line.

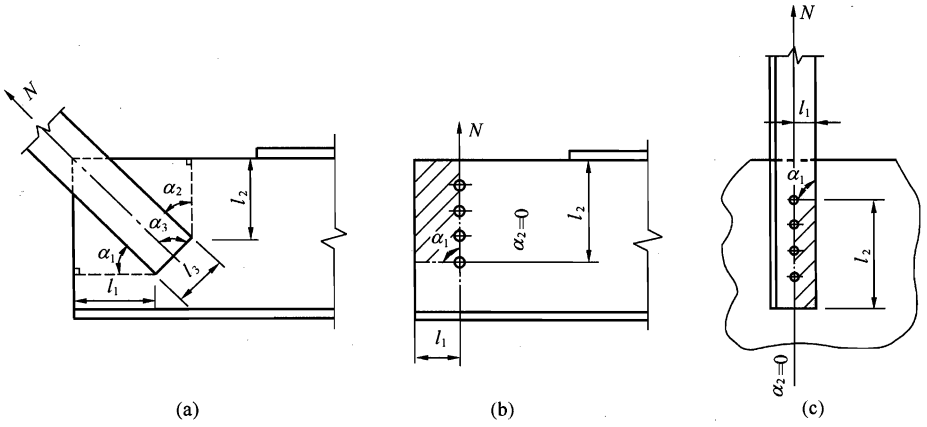

Fig. 7.5.1 Tension and shear tearing of plates
(a) Welded joint; (b) Bolted (riveted) joint; (c) Bolted (riveted) joint

7.5.2 The capacity of truss gusset plate (except members of hot-rolled and welded T-section) can also be calculated using the effective width besides Eq. (7.5.1-1) as follows:

$$\sigma = \frac{N}{b_e t} \leqslant f \tag{7.5.2}$$

where b_e——effective width (Fig. 7.5.2) of plate, reduction for bolt hole shall be made for bolted (or riveted) connection.

7.5.3 The stability of the gusset plate at a truss joint subject to compression from a diagonal

member should satisfy the following requirements:

1 The stability of a gusset plate connected to both diagonal and vertical web members may not be calculated if $c/t \leqslant 15\sqrt{235/f_y}$ (where c is the clear distance from the mid point of the end of connecting leg of the compressive diagonal member to the chord member along the diagonal axis). Otherwise, the stability shall be calculated in accordance with Appendix F. Nevertheless, in any circumstance, c/t shall not exceed $22\sqrt{235/f_y}$.

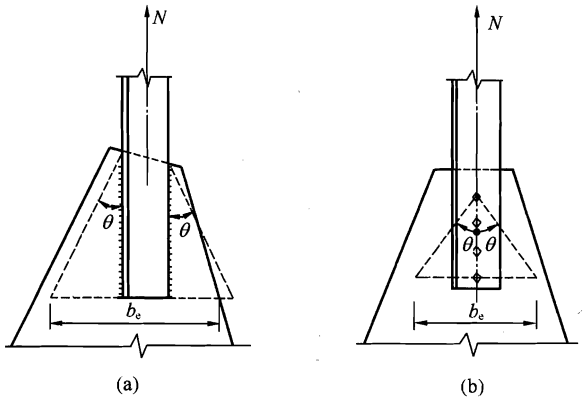

Fig. 7.5.2 Effective width of plate
Note: θ is the load dispersal angle, taking $\theta = 30°$.

2 For a gusset plate connected to diagonal members only, its stability capacity can be taken as $0.8b_e tf$ if $c/t \leqslant 10\sqrt{235/f_y}$. Otherwise, the stability shall be checked in accordance with Appendix F. Nevertheless, in any circumstance, c/t shall not exceed $17.5\sqrt{235/f_y}$.

7.5.4 The gusset plate shall also satisfy the following requirements in addition to the calculation in Clauses 7.5.1～7.5.3:

1 The angle between the axis of a diagonal member and the edge of gusset plate shall not be less than 15°;

2 The angle between the axis of a diagonal member and the chord member shall be between 30°～60°;

3 The ratio of free edge length l_f of a gusset plate to its thickness t shall not be larger than $60\sqrt{235/f_y}$, otherwise an edge stiffener shall be provided.

7.6 Supports (bearings)

7.6.1 At the end of a beam or truss supported on masonry or concrete (Fig. 8.4.12a), the area of base plate shall be adequately large to transmit the end reaction. The thickness of base plate shall be determined according to the bending moment generated by the reaction.

7.6.2 The cylindrical surface in curved support (Fig. 7.6.2a) and roller support (Fig. 7.6.2b) are linearly contacted with the flat plate. The reaction R shall satisfy the following formula:

$$R \leqslant 40ndlf^2/E \qquad (7.6.2)$$

where d——roller diameter of a roller support, or twice the radius r of contact curve in a curved support;

n——number of rollers, and $n = 1$ for curved support;

l——length of the contact line between the flat plate and the roller or the curved surface.

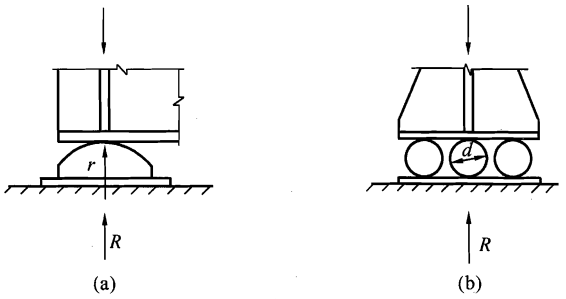

Fig. 7.6.2 Curved support and roller support
(a)Curved support; (b)Roller support

7.6.3 The bearing stress on the cylindrical pin in a hinged pin support(Fig. 7.6.3), where the two cylindrical surfaces have the same radius with a central angle of the free contact surface $\theta \geqslant 90°$, shall be determined by the following formula:

$$\sigma = \frac{2R}{dl} \leqslant f \tag{7.6.3}$$

where d——diameter of the pin;

l——longitudinal length of the contact surface of the pin.

7.6.4 For large span or complex structures, the spherical support or curved support in two directions may be applied to accommodate the displacement and rotation at the supports.

7.6.5 In case of applying composite rubber and steel support to accommodate the end displacement, proper elastomeric materials shall be selected according to the conditions of the project designed and the product properties. The aging of the elastomeric material and possibility of its replacement shall be considered in design.

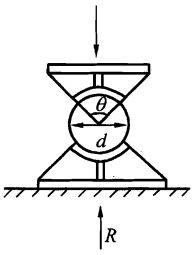

Fig. 7.6.3 Hinged pin support

7.6.6 When the end surface of an axially compressed column or a beam-column is planed, the maximum compressive force will be directly transmitted by the end surface. The connecting welds or bolts shall be determined to resist 15% of the maximum compressive force or the maximum shear force whichever is larger. When a tensile zone occurs on the cross section of a beam-column, the connection shall be designed to resist the maximum tensile force.

8 Detailing requirements

8.1 General stipulations

8.1.1 The steel structures shall be detailed so as to facilitate the fabrication, transportation, erection and maintenance, to make the loads transmitted explicitly, to reduce stress concentration and to avoid multi-axial tensile stress state. For open web structures predominated by wind loading, efforts shall be made to reduce the wind loading area.

8.1.2 For load carrying members and connections in steel structures, the following materials should not be used: plates with thickness less than 4mm, pipes with wall thickness less than 3mm, hot-rolled angles of size less than L45×4 or L56×36×4 for welded structures, hot-rolled angles of size less than L50×5 for bolted or riveted structures.

8.1.3 Whether it is necessary to take special measures such as preheating or post-weld heat treatment for welded structures shall depend upon the combined factors of steel property, plate thickness, welding process, ambient temperature during welding, as well as structural performance requirement etc.. Specifications shall be defined in the design documents.

8.1.4 Reliable bracing system shall be provided in a structure according to its type, composition and loading condition. An independent and spatial stable bracing system shall be provided in each temperature zone (distance between expansion joints) or bays constructed by stages.

8.1.5 Generally, the effect of temperature stress and deformation may not be considered when the length of temperature zone (distance between expansion joints) for single story building or open air structures does not exceed the values defined in Table 8.1.5.

Table 8.1.5 Length of temperature zone(m)

Structural conditions	Longitudinal length of temperature zone (perpendicular to the direction of truss of frame span)	Transverse length of temperature zone (parallel to the direction of truss of frame span)	
		Rigid joint at top of column	Hinged joint at top of column
Buildings with heating and buildings in regions not requiring heating	220	120	150
Hot workshop and buildings without heating in regions requiring heating	180	100	125
Open air structures	120	—	—

Note: 1 When the columns in an industrial building are made of material other than steel, expansion joints shall be provided in accordance with the relevant codes. For cladding structures, expansion joints may be provided separately according to the specific circumstance and referring to the relevant codes.

2 The column bracings in buildings without overhead travelling crane, as well as the column bracings below the crane girders or crane trusses in buildings with overhead travelling crane, should be arranged symmetrically in the middle of a temperature zone. When column bracings are not arranged symmetrically, the distance from the middle of the above mentioned bracings (or from the middle between two sets of bracings in case of two sets of bracing are to be arranged) to the ends of temperature zone should not be longer than 60% of the limit defined in Table 8.1.5.

3 The values in the Table can be increased or reduced if reliable measures or adequate evidences are justified.

8.2 Welded connection

8.2.1 The weld metal shall match the parent metal. When steels of different strength are to be connected, the weld materials matching the low strength steel may be used.

8.2.2 The weld dimensions shall not be increased arbitrarily in design. The three dimensional intersection of welds as well as weld concentration at one location shall be avoided. Weld shall be arranged as symmetrically as possible about the centroid of the connected members.

For corner welding joint with plate thickness beyond 20mm, details that not liable to cause lamellar tearing by welding contraction shall be used.

Note: When steel plates spliced with butt welds, the longitudinal and transverse butt welds may intersect to form cross or T-junctions. In case of T-junction, the spacing between intersecting points shall not be less than 200mm.

8.2.3 The type of grooves for butt welds should be specified on the basis of the plate thickness and construction conditions, and comply with the requirements of the current national standards.

8.2.4 At the splice joints with butt welds, when the plates to be welded are different in width or their thickness differs more than 4mm, a transition slope not steeper than 1:2.5 shall be prepared on one side or both sides of the width or thickness (Fig. 8.2.4). When the plate thickness is different, the weld groove shall be prepared based on the thinner parts according to the requirements in Clause 8.2.3.

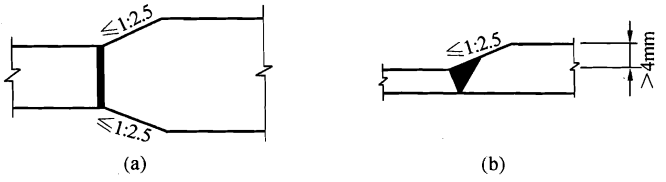

Fig. 8.2.4 Splice of steel plates with different width or thickness
(a) Different width; (b) Different thickness

Note: For the structures directly subjected to dynamic and fatigue loading, the transition slope shall not be steeper than 1:4.

8.2.5 Where partial penetration butt welds are used, the type and size of grooves shall be specified on the structural design drawings, the effective thickness h_e(mm) of the weld shall not be less than $1.5\sqrt{t}$, where t(mm) is the thickness of thicker part welded.

In the structures directly subjected to dynamic loading, partial penetration butt welds should not be used for the welds perpendicular to the applied force.

8.2.6 The angle α between the two legs of a fillet weld is generally 90° (right angle fillet weld). The oblique fillet welds with angle $\alpha > 135°$ or $\alpha < 60°$ should not be used as load-carrying welds (except in tubular structures).

8.2.7 The size of the fillet welds shall comply with the following requirements:

1 The leg size of fillet welds h_f(mm)shall not be less than $1.5\sqrt{t}$, where t(mm)is the thickness of thicker part welded (or thinner part welded when low hydrogen and alkaline electrodes are used). However, for automatic welding, the minimum leg size may be reduced by 1mm. For single sided fillet welds in T-joint, it shall be increased by 1mm. If the thickness of welded part is equal to or less than 4mm, the minimum leg size shall be the same as the thickness of welded parts.

2 The leg size of a fillet weld should not be larger than 1.2 times the thickness of the thinner part welded(except in tubular structures), but the maximum leg size at the edge of plate (thickness is t)shall also comply with the following requirements:

1) When $t \leqslant 6$mm, $h_f \leqslant t$;

2) When $t > 6$mm, $h_f \leqslant t - (1 \sim 2)$mm.

The leg size of fillet welds in circular holes or slot holes should not be larger than 1/3 of the hole diameter or 1/3 of the smaller size of the slot.

3 Generally, the sizes of two legs of a fillet weld are equal. When the difference in the thickness of welded parts is large and equal leg size may not satisfy the requirements in Item 1 and 2 of this Clause , unequal leg size may be used . The leg welded to the thinner part shall comply with the requirements in Item 2, and the leg welded to the thicker part shall comply with the requirements in Item 1.

4 The effective length of a side or end fillet weld shall not be less than $8h_f$ and 40mm.

5 The effective length of a side fillet weld should not exceed $60h_f$. The excessive part will not be considered in calculation. The limitation is not applicable if the internal force is uniformly distributed along the full length of the side fillet weld.

8.2.8 In structures directly subjected to dynamic loading, the surface of fillet welds shall be prepared flat or concave. The ratio of leg size may be 1:1.5 for end fillet weld(the longer leg parallel to the internal force)and 1:1 for side fillet weld.

8.2.9 In secondary members or secondary welded connections, intermittent fillet welds may be used. The length of an intermittent weld segment shall not be less than $10h_f$ or 50mm. The clear distance between the ends of welds shall not be larger than $15t$ (for member in compression) or $30t$ (for member in tension), where t is the thickness of the thinner part welded.

8.2.10 When the end of a plate is connected by two-side fillet welds only, the length of either side fillet weld should not be less than the spacing between the two side fillets welds. Meanwhile, the spacing between the two side fillet welds should not be larger than $16t$(for $t >$ 12mm) or 190mm(for $t \leqslant 12$mm), where t is the thickness of the thinner part welded.

8.2.11 The welds connecting a member to a gusset plate should be two-side fillet welds or three-side around welds(Fig. 8.2.11). L shape around fillet welds can be used for angle members. All the around fillet welds must be carried out continuously round the corners.

8.2.12 Whenever fillet welds at corners of a member end is returned around the corner for a length $2h_f$, it must be carried out continuously round the corner.

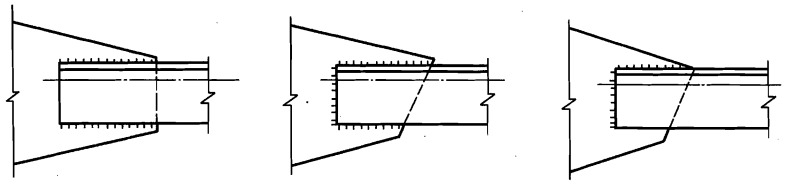

Fig. 8.2.11 Welded connections between member and gusset plate
(a) Two side welds; (b) Three side welds; (c) L shape welds

8.2.13 In lap joints, the lap length shall be neither less than 5 times the thickness of the thinner part welded nor less than 25mm.

8.3 Bolted and riveted connections

8.3.1 The number of permanent bolts (or rivets) used at the end of each member to be connected in a joint or a splice should not be less than two. For connecting the laces on built-up members, single bolt (or rivet) can be used at the end of a lace.

8.3.2 The hole for high strength bolts shall be drilled. The diameter of a bolt hole for high strength bolt in friction type joint shall be 1.5~2.0mm larger than the nominal bolt diameter d. The diameter of a bolt hole for high strength bolt in bearing type joint shall be 1.0~1.5mm larger than the nominal bolt diameter d.

8.3.3 The method of treatment for faying surface of the member in a high strength bolted connection shall be specified in the structural drawings.

8.3.4 The spacing of bolts or rivets shall comply with the requirements specified in Table 8.3.4.

Table 8.3.4 Maximum and minimum allowable distance of bolts or rivets

<table>
<tr><th>Case</th><th colspan="3">Location and direction</th><th>Maximum allowable distance (taking the lesser)</th><th>Minimum allowable distance</th></tr>
<tr><td rowspan="5">Spacing between centers</td><td colspan="3">Outer row (in the direction perpendicular or parallel to loading)</td><td>$8d_0$ or $12t$</td><td rowspan="5">$3d_0$</td></tr>
<tr><td rowspan="3">Inner row</td><td colspan="2">In the direction perpendicular to loading</td><td>$16d_0$ or $24t$</td></tr>
<tr><td rowspan="2">In the direction parallel to loading</td><td>Member in compression</td><td>$12d_0$ or $18t$</td></tr>
<tr><td>Member in tension</td><td>$16d_0$ or $24t$</td></tr>
<tr><td colspan="3">In the diagonal direction</td><td>—</td></tr>
<tr><td rowspan="4">Distance from center to member edge</td><td colspan="3">In the direction parallel to loading</td><td rowspan="4">$4d_0$ or $8t$</td><td>$2d_0$</td></tr>
<tr><td rowspan="3">In the direction perpendicular to loading</td><td colspan="2">Sheared or manual flame cut edge</td><td>$1.5d_0$</td></tr>
<tr><td rowspan="2">Rolled, automatic flame cut or sawn edge</td><td>High strength bolt</td><td rowspan="2">$1.2d_0$</td></tr>
<tr><td>Other bolts or rivets</td></tr>
</table>

Note: 1 d_0 is the hole diameter of bolts or rivets, and t is the thickness of the thinner outside part connected.
2 The maximum spacing of bolt or rivet rows on the edge of a plate connecing to the rigid member (e.g. angle or channel etc.) may be taken as that required for inner rows.

8.3.5 Grade C bolts should be used in joints subject to tensile force along the bolt shank, or may be used in shear connection for the following cases:

1 Secondary connections in structures subject to static loading or indirect dynamic loading;

2 Connections in detachable structures subject to static loading;

3 Erection connections for temporary fixing of members.

8.3.6 For ordinary bolted tension connections subject to direct dynamic loading, double nuts or other effective measures shall be taken to prevent nut loosening.

8.3.7 When rolled sections are spliced with high strength bolts, steel plates should be used as splicing materials.

8.3.8 Rivets with countersunk head or semi-countersunk head shall not be used in connections subject to tension along the rivet shank.

8.3.9 The end-plate(or flange)connected with bolts(or rivets)subject to tension along the bolt shank shall be adequately strengthened in stiffness(such as providing stiffeners) to reduce the negative effects caused by prying force on the tension capacity of the bolts(or rivets).

8.4 Structural members

(Ⅰ) Column

8.4.1 Lacing bars should be used for latticed columns with wider section or subject to comparatively large shear force in the lacing planes.

In battened column, the sum of the linear stiffness of batten plates(or transverse laced bars of rolled steel shape)at a cross section shall not be less than 6 times the linear stiffness of the larger component.

8.4.2 If the ratio of the effective web depth h_0 to the web thickness t_w of a solid-web column, $h_0/t_w > 80\sqrt{235/f_y}$, transverse web stiffeners shall be provided to strengthen the web, and the stiffener spacing shall not be larger than $3h_0$.

The size and details of transverse stiffeners shall comply with the stipulations in Clause 4.3.6.

8.4.3 For latticed columns or larger solid-web columns, transverse diaphragms shall be provided at the section subject to larger horizontal force, and at the end of each shipping unit. The spacing of transverse diaphragms shall be neither more than 9 times the larger width of column section nor 8m.

(Ⅱ) Truss

8.4.4 In welded trusses, the centroidal line of member shall be taken as the axis. In the bolted(or riveted) trusses, the gauge line of bolts or rivets close to the centroidal line of member shall be taken as the axis. At a joint, the axes shall intersect at a common point (except tubular structures).

In case of a truss chord with variable cross section and the eccentricity of axis due to such change not exceeding 5% of the depth of the larger chord section, the effect of axis variation may not be considered.

8.4.5 The joints in a truss can be assumed as hinges for structural analysis. For truss joints connected with gusset plates and members made from H-section or box-sections etc. with larger stiffness, the secondary moment caused by the joint stiffness shall be considered, if the ratio of section depth to the member length (distance between centers of the joints) is larger than 1/10 (for chord members) or 1/15 (for web members).

8.4.6 When the members in a welded truss are connected with gusset plates, the gap between chord and web members, or between web members themselves shall not be less than 20mm. The clear gap between the adjacent toes of filled welds shall not be less than 5mm.

When the members in a truss are connected without gusset plates, the clear gap between the toes of fillet welds connecting adjacent web members shall not be less than 5mm (except tubular structures).

8.4.7 The thickness of gusset plates is generally determined according to the internal forces of the members connected, but shall not be less than 6mm. Tolerances in fabrication and assembly shall be considered in determining the dimensions of a gusset plate.

8.4.8 For a truss with span larger than 36m, hinge-supported at both ends and subject to vertical loading, the horizontal thrust on the supporting members caused by the elastic elongation of bottom chord shall be considered.

(Ⅲ) Beams

8.4.9 The flange of a welded beam is generally formed with one layer of steel plate. When two layers of plates are used, the thickness ratio between the outer plate and inner plate may be taken as 0.5~1.0. In case of the outer plate not covering the full length of the beam, the extended length l_1 of the outer plate beyond the theoretical cutoff point shall comply with the following requirements:

Fillet welds are provided at the end of outer plate:

when $h_f \geqslant 0.75t, l_1 \geqslant b$;

when $h_f < 0.75t, l_1 \geqslant 1.5b$;

Fillet weld are not provided at the end of outer plate:

$$l_1 \geqslant 2b$$

b and t are the width and thickness of the outer flange plate respectively, and h_f is the leg size of side fillet weld and transverse fillet weld.

8.4.10 The flange of a riveted (or bolted with high strength bolt in friction type joint) beam should not be composed of more than three layers of plates. The area of flange angles should not be less than 30% of the overall flange area. If this requirement could not be satisfied even using the largest angles, side plates may be added (Fig. 8.4.10). The total area of side plates and angles shall not be less than 30% of the overall flange area.

When the outer plates are not covering the full length of the beam, the number of rivets (or high strength bolts in friction type joint) on the extended length beyond the theoretical cutoff point shall be determined according to 1/2 of the tension, or compression capacity of the outer plate net sectional area.

8.4.11 For a welded beam, the corner of transverse stiffeners intersecting with the flange shall be cut off . An oblique cutting may be prepared with $b_s/3$ (but not larger than 40mm) in width and $b_s/2$ (but not larger than 60mm) in depth, see Fig. 8.4.11, where b_s is the width of the stiffener.

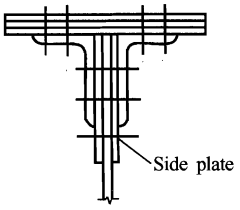

Fig. 8.4.10 Flange section of riveted (or high strength bolted in friction-type joint) girder

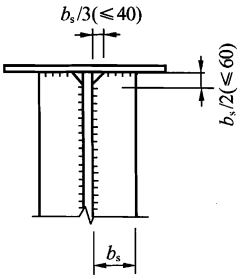

Fig. 8.4.11 Corner-cut of stiffeners

8.4.12 When the bottom end of the bearing stiffeners at beam end is designed according to the design value of bearing strength, the bottom end shall be planed and tightly fitted. The extended segment of the stiffener (Fig. 8.4.12b) shall not be longer than twice the thickness of the stiffener.

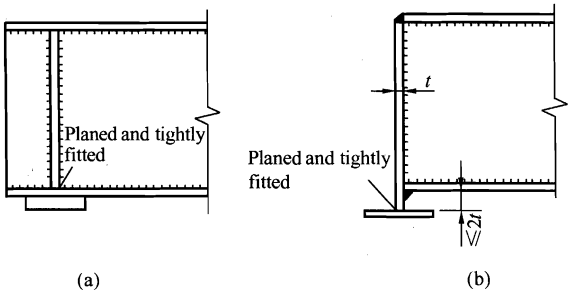

Fig. 8.4.12 End support of beam
(a) Flat plate support; (b) Extended support

(Ⅳ) Column base

8.4.13 The anchor bolt of a column base should not be used to resist the horizontal reaction at the bottom of the column. This reaction can be resisted by the friction force between the base plate and the concrete foundation (friction coefficient can be taken as 0.4) or by shear resistant keys provided.

8.4.14 The anchor bolts of a column base shall be embedded in the foundation with a depth sufficient to transmit the tensile force in the anchor bolt by bonding between bolt and concrete. If the embedment depth is limited, the anchor bolt shall be securely fixed to an

anchor plate or anchor beam to transmit all the tensile force of the anchor bolt. In this case, the bonding between the anchor bolt and concrete may not be considered.

8.4.15 For the inserted column base, the minimum length d_{in} of the column inserted into the foundation cup may be determined according to Table 8.4.15, but should be neither less than 500mm nor 1/20 of the being erected member length.

Table 8.4.15 Minimum length of steel column inserted into foundation cup

Column section	Solid web section	Latticed column with two components(single cup or two cups)
Minimum inserted length d_{in}	$1.5h_c$ or $1.5d_c$	Larger of $0.5h_c$ and $1.5b_c$(or d_c)

Note:1 h_c is the depth of the column section(longer side), b_c is the width of the column section, d_c is the outer diameter of the circular tubular column.

2 The distance of the column bottom end to the bottom of foundation cup is generally taken as 50mm. If a column base plate is provided, this distance could be taken as 200mm.

8.4.16 When the column base is encased in concrete structures, the thickness of concrete cover as well as encasing concrete shall not be less than 180mm.

Shear studs should be provided on the flanges of steel column segment encased or covered by concrete. The stud diameter shall not be less than 16mm and horizontal and vertical spacings from center to center shall not be larger than 200mm.

Horizontal stiffeners or diaphragms shall be provided at the top of the encased segment of the encased column base.

8.5 Requirements for crane girders and crane trusses(or similar structures)

8.5.1 The flange of a welded crane girder should be formed with single layer of steel plate. When two layers of plates are used, the outer plate should cover full length of the girder and special measures shall be taken in design and construction to ensure the two layers of top flange plates in close contact.

8.5.2 The crane truss and surge truss should not be used in supporting soaking pit crane, stripper crane or claw crane as well as similar cranes.

8.5.3 The welded crane trusses shall comply with the following requirements:

1 At the truss joint, the gap between web and chord members, a, should not be less than 50mm and the two edges of the gusset plate should be rounded with radius r not less than 60mm; The angle between the edge of the gusset plate and the axis of the web member, θ, shall not be less than 30° (Fig. 8.5.3-1). The start or stop of the welds connecting the chord member of angle sections to the gusset plate shall be set back at least 5mm from the plate edges(Fig. 8.5.3-1a). In T-joint, the combined butt and fillet weld connecting the gusset plate and the H-section chord member shall be furnished with complete penetration. The rounded part of the gusset plate shall be free from defects caused

by start or stop of welds. Furthermore, in crane truss for heavy duty cranes, the rounded part shall be ground and provide a smooth transition from gusset to the chord member (Fig. 8.5.3-1b).

2 When welding the filler plate onto a member, the start or stop of the weld shall be set back at least 5mm(Fig. 8.5.3-1c). The filler plate in members of a crane truss for heavy-duty cranes shall be connected with high strength bolts.

3 For trusses using H-section members, the joint details may be formed as shown in Fig. 8.5.3-2.

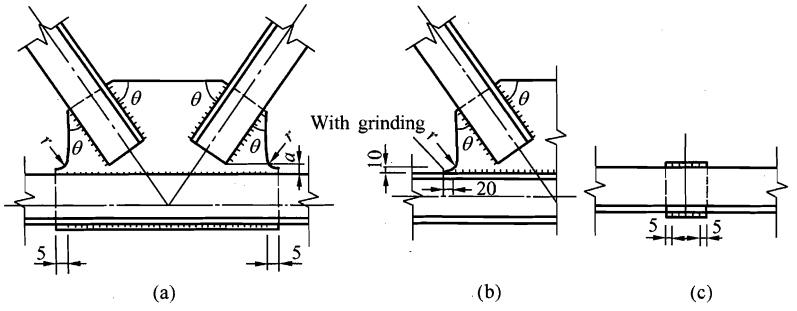

Fig. 8.5.3-1 Joints of crane truss (1)

8.5.4 The complete penetration butt weld with run on/off tabs shall be used for splicing the flange or the web of a crane girder. After removing the run on/off tabs, the locations shall be ground flush. Welding or high strength bolt in friction type joint shall be used for the in-situ splice of fabricated segments of a crane girder or crane truss.

8.5.5 In welded crane girder or crane truss, combined butt and fillet weld in T joint fully penetrated as required in Clause 7. 1. 1, should be formed as shown in Fig. 8.5.5.

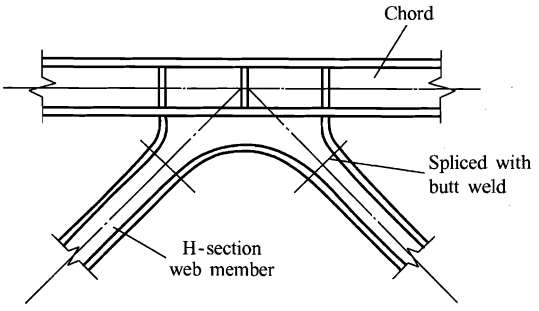

Fig. 8.5.3-2 Joints of crane truss (2)

8.5.6 The width of transverse stiffeners in crane girder should not be less than 90mm. Double and symmetric web stiffeners shall be provided at the end supports of the girder and their ends shall be planed and closely fitted against the top and bottom flange. Intermediate transverse stiffeners shall be planed and closely fitted against the top flange of the girder. The intermediate transverse stiffeners in a crane girder for heavy-duty crane shall also be symmetrically arranged on both sides of the girder web, but for medium or light duty cranes, transverse stiffeners may be provided on one side of the girder web or staggered on both

sides of the girder web.

In welded crane girder, the transverse stiffeners (including short stiffeners) shall not be welded to the tension flange of girder, but may be welded to the compression flange of the girder. The end stiffeners may be welded to the top and bottom flanges of the girder. The bottom end of intermediate transverse stiffeners should be 50 ~ 100mm away from the tension flange. The welds connecting this stiffener to the web should not start or stop at the bottom end of the stiffener.

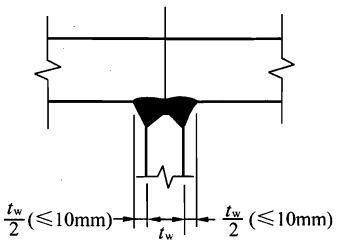

Fig. 8.5.5 Complete penetration of combined butt and fillet weld in T-joint

Welding should not be used for the connection between the bracing and the tension flange of a crane girder (or the bottom chord of a crane truss).

8.5.7 The requirements for detailing of the top chord of a crane truss where the crane rails are fixed directly shall be the same as those for a continuous crane girder.

8.5.8 For a girder supporting heavy-duty crane, high strength bolts in friction type joint should be used for connecting the top flange to the column as well as to the surge truss to transmit the horizontal force. High strength bolts in friction-type joint or welding may be used for connecting the top flange to the surge girder. The details for connecting the end of crane girder to the column shall be so designed as to minimize the additional stress at the connection caused by the flexural deformation of the crane girder.

8.5.9 When the span of a crane truss or a crane girder for heavy duty cranes is equal to or larger than 12m, or the span of a crane girder for light and medium duty cranes is equal to or larger than 18m, an auxiliary truss and horizontal bracing system on bottom flange (or bottom chord) should be provided. The vertical bracing, when provided, should not be located at the location where the maximum vertical deflection of crane girder or crane truss occurs.

Measures in detailing for crane truss shall be taken to prevent the top chord member from torsion caused by the eccentricity of rails.

8.5.10 The edges of the tension flange of a crane girder for heavy-duty crane (or the tension chord of a crane truss) should be rolled or prepared by automatic flame cutting, and the full length of the edges shall be planed if prepared by manual flame cutting or machine shearing.

8.5.11 The attachments for hanging appliance shall not be welded to the tension flange of a crane girder (or tension chord of a crane truss). Striking arc or welding clamp device should also not be allowed on the tension flange.

8.5.12 The joint details of crane rail shall be designed to ensure smooth passage of crane wheels. When welded long rails are used and fastened to the crane girder with clamping plates, a clearance (about 1mm) shall be preserved between the rail and clamping plates to allow the longitudinal expansion and contraction of the rail caused by temperature variations.

8.6 Large span roof structures

8.6.1 Large span roof structure designates roof structures with span equal to or larger than 60m. Plane structures such as truss, rigid frame, arch etc., or spatial structures such as layer grid, shell grid, suspended structures, cable-membrane structures etc. may be used.

8.6.2 In designing large span roof structure, the effects on structural internal forces generated by member deformation, supporting member displacement, boundary restraint conditions and temperature variations etc. shall be considered. Proper supporting system should be selected according to the structural conditions to accommodate the deformation so that the additional internal force can be relieved.

8.6.3 For roof trusses with hanging cranes, the allowable deflection may be taken as 1/500 of the span for deflection calculated according to the characteristic values of permanent plus variable load, and 1/600 of the span for deflection calculated according to the characteristic values of variable load. For the roof truss without hanging cranes, the allowable deflection may be taken as 1/250 of the span for deflection calculated using the characteristic values of permanent plus variable load; and if ceiling is furnished, the allowable deflection may be taken as 1/500 of the span for deflection calculated using the characteristic values of variable load.

8.6.4 For members in the large span roof structure subject to larger internal force or larger dynamic loading, the connections shall be designed with high strength bolts in friction-type joint(except tubular structures).

8.6.5 The large span roof structure shall be checked for erection stage. The erection method and hanging location should be determined by calculations to ensure the strength and stability of the roof structure at each stage of erection.

8.7 Requirements for preventing brittle fracture under low temperature

8.7.1 Proper structural types and fabrication process shall be selected to reduce the stress concentration on the structure as much as possible. In regions where the working temperature is equal to or below −30℃, thinner plates should be used to fabricate the welded members.

8.7.2 In regions where the working temperature is equal to or below −20℃, the details of welded structures should satisfy the following requirements:

1 On the gusset plate of a truss, the clear gap between weld toe of a web member and an adjacent weld toe of a chord member should not be less than $2.5t$ (t is the gusset plate thickness).

2 For the butted or T-butted gusset plate, the gusset plate should be rounded and ground with radius not less than 60mm at the location of butt weld to provide a smooth transition(see Fig. 8.5.3-1*b*).

3 In a member splice joint, the length of free segment of the splicing plate shall not be less than $5t$, where t is the thickness of splicing plate(Fig. 8.7.2).

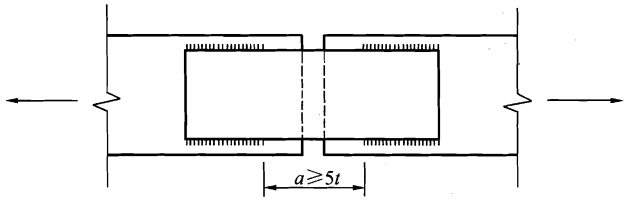

Fig. 8.7.2 Details of splice joint with covering plates

8.7.3 In regions where the working temperature is equal to or below −20℃, the structural fabrication and erection should comply with the following requirements:

1 Bolting should be used for erection connections;

2 The plate edge of a tension member should be rolled or automatically flame cut. If a plate thicker than 10mm is manually flame cut or machine sheared, its edge shall be planed along its full length;

3 The bolt holes shall be drilled, or sub-punched and reamed;

4 The quality level of butt weld shall not be lower than class 2.

8.8 Fabrication, transportation and erection

8.8.1 In dividing a structure into units for transportation, attentions shall be given to economical rationality, convenience of transportation and storage, and ease of assembly, in addition to the structural loading conditions.

8.8.2 The connections used for structural erection shall be reliable in transmitting load, easy to fabricate, simple in details and convenient to adjust.

8.8.3 When welded connections are used for erection, measures shall be taken for member positioning and temporary fixings.

8.9 Protection and heat insulation

8.9.1 In steel structures, in addition to protection against corrosion(painting and galvanizing after cleaning rust), structural details shall be designed as much as possible to avoid places difficult for inspection, cleaning and painting, as well as hidden areas where moisture or lot of dust may accumulate. The closed section shall be sealed with welding along its full length and at the ends.

The paintings and quality level of rust-cleaning required for rust and corrosion protection, as well as the detailing requirements for corrosion protection of steel structures, shall comply with the current national standard of "Code for anticorrosion design of industrial constructions" GB 50046 and "Rust grades and preparation grades of steel surface before application of paints" GB 8923. The quality level of rust-cleaning, as well as the painting(or

galvanizing)materials and the thickness of painting(galvanizing)shall be specified in the design documents.

Unless specially required, the material thickness of steel section generally shall not be increased to compensate corrosion.

8.9.2 For buildings designed with working life equal to or longer than 25 years, special measures shall be taken for protection against corrosion for the locations where repainting is inaccessible during the service period.

8.9.3 The segment of column base below the ground level shall be encased with lower strength concrete(thickness of concrete cover shall not be less than 50mm), and the encasing concrete shall be at least 150mm above the ground level. When the bottom of column base is above the ground level, the bottom of column base shall be at least 100mm above the ground level.

8.9.4 The fire protection of steel structures shall comply with the current national standard of "Code for fire protection design of buildings" GBJ 16 and "Code for fire protection design of tall buildings" GB 50045. The fire protection coating on structural members shall be designed according to the fire protection level required for buildings as well as the fire ratings required for different structural members. The properties, thickness and quality requirement of fire protection coating shall comply with the current national standard of "Fire resistive coating for steel structures" GB 14907 and "Code for application technology of fire resistive coating for steel structures" CECS 24.

8.9.5 For structures subject to high temperatures, the following protective measures shall be taken according to different conditions:

1 When a structure may be exposed to hot and molten metal, bricks or other heat insulation materials shall be applied to cover and protect;

2 When the surface of a structure is exposed to radiant heat above 150℃ for long term, or exposed to flame for short term, effective protections shall be provided(e.g. heat insulation layer or water jacket etc.).

9 Plastic design

9.1 General stipulations

9.1.1 The provisions in this chapter are applicable to the fixed end beam, continuous beam as well as single or tow-story rigid frame with solid web members when they are not directly subjected to dynamic loading.

9.1.2 For plastic design of structures or structural members according to the ultimate limit state, the design value of load shall be used. The simplified plastic theory is used to analyze the plastic development and internal forces redistribution on the member sections.

The characteristic value of load and elastic theory of analysis can be used for serviceability limit state.

9.1.3 For plastic design, the mechanical properties of steel material shall satisfy the tensile to yielding strength ratio $f_u/f_y \geqslant 1.2$, elongation $\delta_5 \geqslant 15\%$, the strain ε_u corresponding to tensile strength f_u not less than 20 times yielding strain ε_y.

9.1.4 The width-to-thickness ratio of plate elements for plastic design shall comply with the stipulations in Table 9.1.4.

Table 9.1.4 Width-to-thickness ratio of plate element

Type of section	Flange	Web
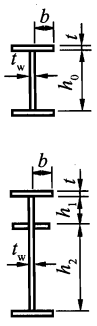	$b/t \leqslant 9\sqrt{\frac{235}{f_y}}$	When $\frac{N}{Af} < 0.37$, $\frac{h_0}{t_w}\left(\frac{h_1}{t_w}, \frac{h_2}{t_w}\right) \leqslant \left(72 - 100\frac{N}{Af}\right)\sqrt{\frac{235}{f_y}}$ When $\frac{N}{Af} \geqslant 0.37$, $\frac{h_0}{t_w}\left(\frac{h_1}{t_w}, \frac{h_2}{t_w}\right) \leqslant 35\sqrt{\frac{235}{f_y}}$
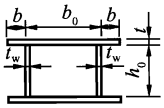	$b_0/t \leqslant 30\sqrt{\frac{235}{f_y}}$	Same as the web of I-section

9.2 Calculation of members

9.2.1 The bending strength of a flexural member subject to moment M_x (for H-and I-section, x axis is the strong axis) about its principal axis shall satisfy the following require-

ment:

$$M_x \leqslant W_{pnx} f \tag{9.2.1}$$

where W_{pnx}——Plastic modulus of net section about x axis.

9.2.2 The shear force V of a flexural member is assumed to be resisted by the section web and the shear strength shall satisty the following requirement:

$$V \leqslant h_w t_w f_v \tag{9.2.2}$$

where h_w, t_w——depth and thickness of section web respectively;

f_v——design value of shear strength of steel.

9.2.3 The strength of a beam-column subject to moment about its principal axis x shall satisfy the following requirements:

When $\dfrac{N}{A_n f} \leqslant 0.13$

$$M_x \leqslant W_{pnx} f \tag{9.2.3-1}$$

When $\dfrac{N}{A_n f} > 0.13$

$$M_x \leqslant 1.15\left(1 - \frac{N}{A_n f}\right) W_{pnx} f \tag{9.2.3-2}$$

where A_n——area of net cross section.

The compressive force N in a beam-column shall not exceed $0.6A_n f$. The shear strength of a beam-column shall comply with Eq. (9.2.2).

9.2.4 The stability of a beam-column subject to moment about its principal axis x shall satisfy the following requirement:

1 For in-plane stability:

$$\frac{N}{\varphi_x A f} + \frac{\beta_{mx} M_x}{W_{px} f\left(1 - 0.8\dfrac{N}{N'_{Ex}}\right)} \leqslant 1 \tag{9.2.4-1}$$

where W_{px}——plastic modulus of gross section about x axis. φ_x, N'_{Ex} and β_{mx} shall be determined in accordance with Clause 5.2.2 as defined for the calculation of in-plane stability.

2 For out-of-plane stability:

$$\frac{N}{\varphi_y A f} + \eta \frac{\beta_{tx} M_x}{\varphi_b W_{px} f} \leqslant 1 \tag{9.2.4-2}$$

φ_y, φ_b and β_{tx} shall be determined in accordance with Clause 5.2.2 as defined for the calculation of out-of-plane stability.

9.3 Allowable slenderness ratio and detailing requirements

9.3.1 The slenderness ratio of compression members should not be larger than $130\sqrt{235/f_y}$.

9.3.2 The lateral bracings must be provided at the member section where plastic hinge occurs. The slenderness ratio λ_y of the member segment between such braced location and its adjacent braced points shall satisfy the following requirements:

When $-1 \leqslant \dfrac{M_1}{W_{px}f} \leqslant 0.5$

$$\lambda_y \leqslant \left(60 - 40\frac{M_1}{W_{px}f}\right)\sqrt{\frac{235}{f_y}} \tag{9.3.2-1}$$

When $0.5 < \dfrac{M_1}{W_{px}f} \leqslant 1.0$

$$\lambda_y \leqslant \left(45 - 10\frac{M_1}{W_{px}f}\right)\sqrt{\frac{235}{f_y}} \tag{9.3.2-2}$$

where λ_y——out-of-plane slenderness ratio, $\lambda_y = l_1/i_y$; l_1 is the distance between the laterally braced points; i_y is radius of gyration of member section;

M_1——bending moment at the laterally braced points with distance l_1 from the plastic hinge section; $M_1/(W_{px}f)$ is taken as positive when the segment l_1 is bent in single curvature, or negative when bent in reverse curvature.

On the member segment where no plastic hinges occur, the distance between two laterally braced points shall satisfy the requirements for out-of-plane stability as defined in Chapter 4 and Chapter 5.

9.3.3 The axial force on the lateral bracings provided for reducing the out-of-plane effective length of the member shall be determined in accordance with Clause 4.2.6 or 5.2.8.

9.3.4 All joints and their connections shall have adequate stiffness to ensure the angles between members joined to be unchanged before plastic hinges occur.

The splices and connections of members shall be capable to transmit 1.1 times the maximum design moment at these locations. The moment capacity shall not be less than $0.25 W_{px}f$.

9.3.5 If the plate elements are cut with manual flame-cutting or machine shearing, the plate edge at the plastic hinge location shall be planed.

The bolt holes on the tensile plate element at the plastic hinge location of a member shall be drilled or punched and reamed.

10 Steel tubular structures

10.1 General stipulations

10.1.1 This chapter deals with the design rules applicable to steel truss structures consisting of circular, square or rectangular hollow sections, with bracing members (abbreviated to bracings) directly welded to chord members (abbreviated to chords), not subject to direct dynamic loading.

10.1.2 The ratio of external diameter to wall thickness of circular tubes shall not exceed $100(235/f_y)$, and the ratio of maximum external dimension to wall thickness of rectangular tubes shall not exceed $40\sqrt{235/f_y}$.

10.1.3 The yield strength and the ratio of the yield strength to ultimate strength f_y/f_u of the material for both hot finished and cold formed tubes shall not exceed $345N/mm^2$ and 0.8 respectively. The wall thickness of tubes should not be greater than 25mm.

10.1.4 The axial force distribution in a truss may be determined on the assumption that the members are connected by pinned joints, provided that:

1 The joint geometry is within the range of validity specified in the provisions of this chapter as appropriate.

2 The ratio of the panel length to the member external depth (or diameter) in the plane of the truss is not less than: 12 for chords, and 24 for bracings.

10.1.5 Moments resulting from joint eccentricities may be neglected in calculating the capacity of the joint and that of the chord in tension, provided that the eccentricities are within the following limits:

$$-0.55 \leqslant e/h(\text{or } e/d) \leqslant 0.25 \qquad (10.1.5)$$

where e——eccentricity, as defined in Fig.10.1.5;

d——external diameter of chords;

h——external depth of rectangular chords, in the plane of truss.

But the moment $M = \Delta N \times e$ (ΔN is the difference between the axial forces of the chords on the two sides of the joint) need be taken into account in the compression chord design.

10.2 Detailing requirements

10.2.1 The detailing of steel tube joints shall comply with the following requirements:

1 The external dimension of the chords shall not be less than that of the bracings, and the wall thickness of the chords shall not be thinner than that of the bracings. The bracings shall not penetrate into the chords at their connections.

2 The angles between the chord and bracing axes and between adjacent bracing axes

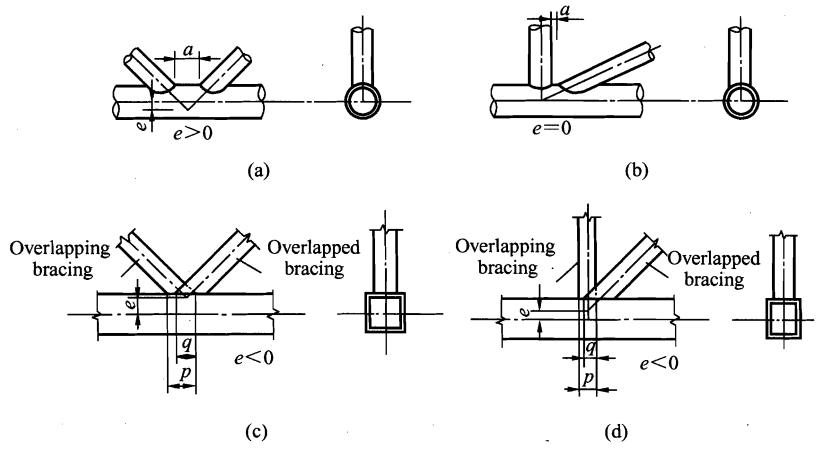

Fig. 10.1.5 Eccentricity, gap and overlap of K and N joints
(a)Gap K-joint; (b)Gap N-joint; (c)Overlap K-joint; (d)Overlap N-joint

should not be less than 30°.

3 Eccentricity should be avoided as far as possible at the joints connecting the bracing to the chord, except at the overlap joints.

4 The weld connecting the bracing to chord shall be continuous around the perimeter of the bracing and made with a smooth transition to the base metal.

5 The end of bracings should be prepared by the automatic tube cutting machine, and the end should not be grooved if the wall thickness of the bracing is less than 6mm.

10.2.2 In gap K and N-joints(Fig. 10.1.5a, b), the gap between the bracings shall not be less than the sum of the wall thickness of the two adjacent bracings.

10.2.3 In overlap K and N-joints(Fig. 10.1.5c, d), the overlap ratio, expressed as a percentage $O_v = q/p \times 100\%$, shall satisfy: $25\% \leqslant O_v \leqslant 100\%$, and the overlap shall be sufficient to ensure that the interconnection weld of the bracings is adequate for satisfactory force transfer from one bracing to the other.

10.2.4 Where overlapping bracings have different thicknesses, the thinner member shall overlap the thicker one. Where overlapping bracings are of different strength grades, the member with the lower (yield) strength shall overlap the member with the higher (yield) strength.

10.2.5 In welded joints between chord and bracing, the connection should be established around the entire perimeter of the hollow section by means of a fillet weld, or part butt weld and part fillet weld. In the region where the angle between the walls of bracing and chord exceeds or equals 120°, butt weld or grooved fillet weld may be used. The leg size of fillet weld should not be greater than twice the wall thickness of the bracing to be connected.

10.2.6 Steel tube members shall be properly reinforced at the locations of relatively large transverse loads to prevent excessive local deformations. Holes shall be avoided at major stressed locations of the steel tube member. If holes are necessary thereat, appropriate mea-

sures of strengthening shall be taken.

10.3 Capacity of members and joints

10.3.1 The design values of the internal axial forces both in the bracings and the chords for the directly welded steel tubular structures shall not exceed the design values of the capacity of relevant members determined according to Chapter 5 of this code, and the design value of the internal axial force in the bracings shall also not exceed the design value of the capacity of the joint.

10.3.2 The capacity of weld around the perimeter of the bracing at joint shall not less than the capacity of the joint.

The weld connecting a bracing to a chord may be assumed as a fillet weld around the entire perimeter of the bracing, calculated according to Formula(7.1.3-1), but taking $\beta_f = 1$. The effective thickness of the fillet weld is variable around the perimeter of bracing, and $0.7h_f$ may be taken as the average effective thickness when the bracing is axially loaded, The effective length of the weld may be calculated according to the following provisions:

1 In the circular tube structures, the length of intersecting curve between bracing and chord may be taken as follows:

When $d_i/d \leqslant 0.65$

$$l_w = (3.25d_i - 0.025d)\left(\frac{0.534}{\sin\theta_i} + 0.466\right) \qquad (10.3.2\text{-}1)$$

When $d_i/d > 0.65$

$$l_w = (3.81d_i - 0.389d)\left(\frac{0.534}{\sin\theta_i} + 0.466\right) \qquad (10.3.2\text{-}2)$$

where d, d_i——external diameter of the chord and bracing respectively;

θ_i——included angle between the chord and bracing.

2 In the rectangular tube structures, the effective length of intersecting curve between bracing and chord should be calculated as follows:

For gap K and N-joints:

When $\theta_i \geqslant 60°$

$$l_w = \frac{2h_i}{\sin\theta_i} + b_i \qquad (10.3.2\text{-}3)$$

When $\theta_i \leqslant 50°$

$$l_w = \frac{2h_i}{\sin\theta_i} + 2b_i \qquad (10.3.2\text{-}4)$$

When $50° < \theta_i < 60°$, a linear interpolation shall be taken.

For T, Y and X-joints(Fig.10.3.4):

$$l_w = \frac{2h_i}{\sin\theta_i} \qquad (10.3.2\text{-}5)$$

where h_i, b_i——external depth and width of the bracing respectively.

For the welded joints between the circular bracing and rectangular chord, the effective length of weld should be taken as the difference between the length of intersecting curve and the external diameter d_i of the bracing.

10.3.3 The capacities of directly welded joints between circular tube chords and bracings shall be determined from the following provisions. The range of validity is: $0.2 \leqslant \beta \leqslant 1.0$; $d_i/t_i \leqslant 60$; $d/t \leqslant 100$; $\theta \geqslant 30°$; $60° \leqslant \phi \leqslant 120°$ (where β——bracing to chord external diameter ratio; d_i, t_i——external diameter and wall thickness of bracing; d, t——external diameter and wall thickness of chord; θ——included angle between the chord and bracing; ϕ——angle between bracing planes in multiplanar joints).

To ensure the chord strength at the joint, the axial forces in the bracings shall not exceed the design values of capacity determined as follows:

1 X-joints (Fig.10.3.3a):

1) The design value of capacity, N_{cX}^{pj}, of the bracing in compression at joints shall be calculated by the following formula:

$$N_{cX}^{pj} = \frac{5.45}{(1-0.81\beta)\sin\theta}\psi_n t^2 f \qquad (10.3.3\text{-}1)$$

where ψ_n——parameter: $\psi_n = 1 - 0.3\frac{\sigma}{f_y} - 0.3\left(\frac{\sigma}{f_y}\right)^2$; for chord in tension at one or both sides of the joint, $\psi_n = 1.0$;

f——design value of steel strength in tension, compression and bending;

f_y——yield strength of the chord steel;

σ——lesser absolute value of the compressive axial stress in the chords at both sides of the joint.

2) The design value of capacity, N_{tX}^{pj}, of the bracing in tension at joints shall be calculated by the following formula:

$$N_{tX}^{pj} = 0.78\left(\frac{d}{t}\right)^{0.2} N_{cX}^{pj} \qquad (10.3.3\text{-}2)$$

2 T or Y-joints (Fig.10.3.3b, c):

1) The design value of capacity, N_{cT}^{pj}, of the bracing in compression at joints shall be calculated by the following formula:

$$N_{cT}^{pj} = \frac{11.51}{\sin\theta}\left(\frac{d}{t}\right)^{0.2}\psi_n\psi_d t^2 f \qquad (10.3.3\text{-}3)$$

where ψ_d——parameter, taken as:

$$\psi_d = 0.069 + 0.93\beta \quad \text{When } \beta \leqslant 0.7;$$

$$\psi_d = 2\beta - 0.68 \quad \text{When } \beta > 0.7.$$

2) The design value of capacity, N_{tT}^{pj}, of the bracing in tension at joints shall be calculated by the following formulae:

When $\beta \leqslant 0.6$

$$N_{tT}^{pj} = 1.4N_{cT}^{pj} \tag{10.3.3-4}$$

When $\beta > 0.6$

$$N_{tT}^{pj} = (2 - \beta)N_{cT}^{pj} \tag{10.3.3-5}$$

3 K-joints (Fig.10.3.3d):

1) The design value of capacity, N_{cK}^{pj}, of the bracing in compression at joints shall be calculated by the following formula:

$$N_{cK}^{pj} = \frac{11.51}{\sin\theta_c}\left(\frac{d}{t}\right)^{0.2}\psi_n\psi_d\psi_a t^2 f \tag{10.3.3-6}$$

where θ_c——angle between the axes of the compressive bracing and the chord;

ψ_a——parameter, calculated as follows:

$$\psi_a = 1 + \frac{2.19}{1 + \frac{7.5a}{d}}\left(1 - \frac{20.1}{6.6 + \frac{d}{t}}\right)(1 - 0.77\beta) \tag{10.3.3-7}$$

a——gap between the two bracings; taking $a = 0$ when $a < 0$.

2) The design value of capacity, N_{tK}^{pj}, of the bracing in tension at joints shall be calculated by following formula:

$$N_{tK}^{pj} = \frac{\sin\theta_c}{\sin\theta_t}N_{cK}^{pj} \tag{10.3.3-8}$$

where θ_t——angle between the axes of the tensile bracing and the chord.

4 TT-joints(Fig.10.3.3e):

1) The design value of capacity, N_{cTT}^{pj}, of the bracing in compression at joints shall be calculated by the following formula:

$$N_{cTT}^{pj} = \psi_g N_{cT}^{pj} \tag{10.3.3-9}$$

where $\psi_g = 1.28 - 0.64\frac{g}{d} \leqslant 1.1$, g is the transverse gap between the two bracings.

2) The design value of capacity, N_{tTT}^{pj}, of the bracing in tension at joints shall be calculated by the following formula:

$$N_{tTT}^{pj} = N_{tT}^{pj} \tag{10.3.3-10}$$

5 KK-joints(Fig.10.3.3f):

The design values of capacity, N_{cKK}^{pj} or N_{tKK}^{pj}, of the bracings in compression or in tension at KK-joints shall be equal to 0.9 times the relevant design values of capacity, N_{cK}^{pj} or N_{tK}^{pj} respectively, of the bracings at a K-joint.

10.3.4 The capacities of directly welded joints composed of rectangular tubes shall be determined from the following provisions(Fig.10.3.4). The range of validity is given in Table 10.3.4.

To ensure the rectangular chord strength at the joints, both the axial forces, N_i in brac-

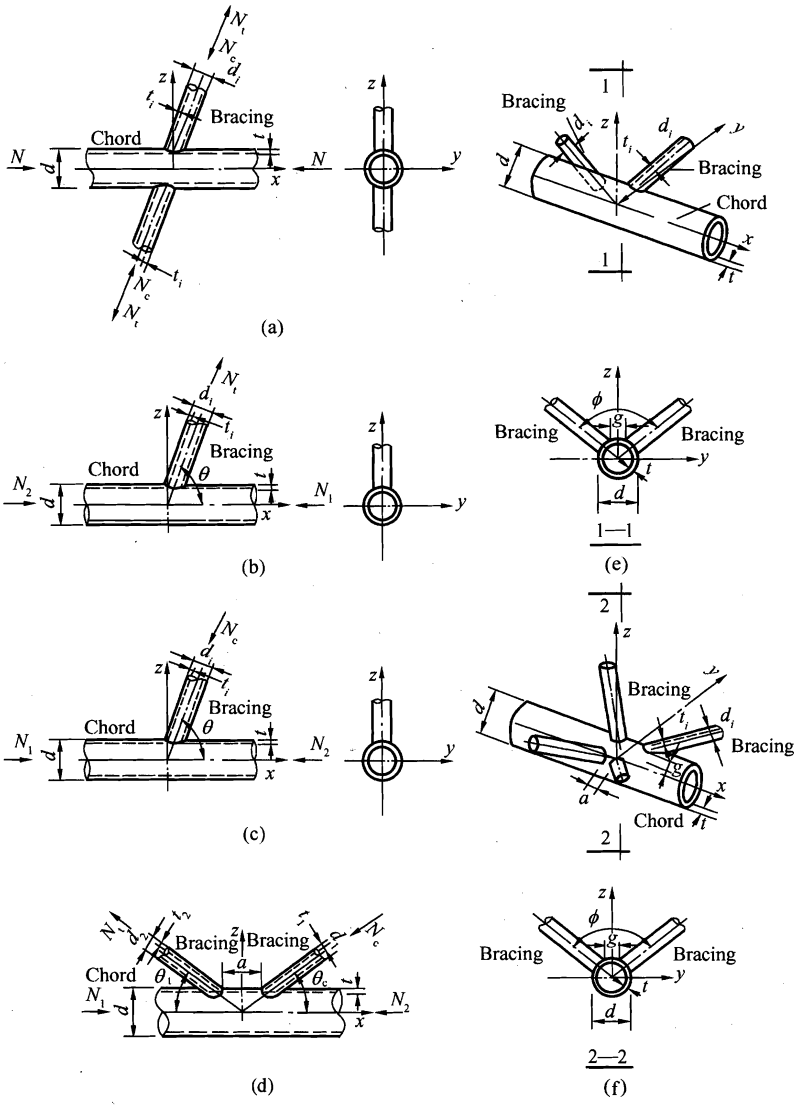

Fig. 10.3.3 Types of joint in circular tube structures
(a) X-joint; (b) T and Y-joint in tension; (c) T and Y-joint in compression;
(d) K-joint; (e) TT-joint; (f)KK-joint

ing and N in chord, shall not exceed the design value of joint capacity determined as follows:

1 T, Y and X-joints with rectangular bracings(Fig.10.3.4a,b):

1) When $\beta \leqslant 0.85$, the design value of capacity, N_i^{pj}, of the bracing at joints shall be calculated by following formula:

$$N_i^{pj} = 1.8\left(\frac{h_i}{bc\sin\theta_i} + 2\right)\frac{t^2 f}{c\sin\theta_i}\psi_n \qquad (10.3.4\text{-}1)$$

$$c = (1-\beta)^{0.5}$$

where ψ_n——parameter,

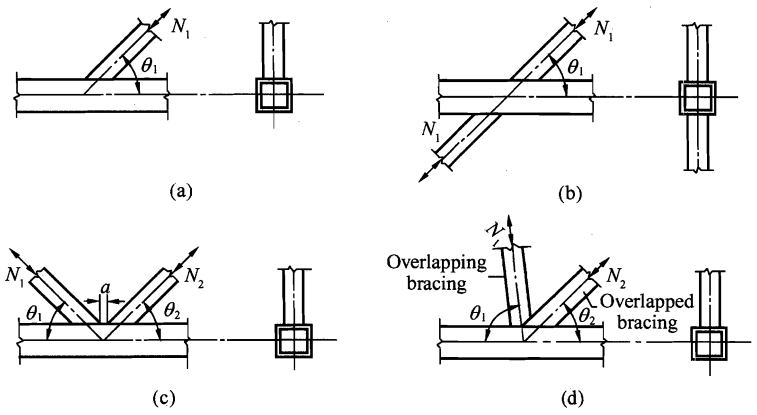

Fig. 10.3.4 Directly welded uniplanar joints composed of rectangular tubes
(a)T、Y-joint; (b)X-joint; (c)Gap K,N-joint; (d)Overlap K,N-joint

$$\psi_n = 1.0 - \frac{0.25}{\beta} \cdot \frac{\sigma}{f}; \text{for chord in compression;}$$

$$\psi_n = 1.0; \text{for chord in tension;}$$

σ——the larger absolute value of the compressive axial stress in the chord at both sides of the joint.

2) When $\beta = 1.0$, the design value of capacity, N_i^{pj}, of the bracing at joints shall be calculated by following formula:

$$N_i^{pj} = 2.0\left(\frac{h_i}{\sin\theta_i} + 5t\right)\frac{tf_k}{\sin\theta_i}\psi_n \qquad (10.3.4\text{-}2)$$

For X-joints, when $\theta_i < 90°$ and $h \geqslant h_i/\cos\theta_i$, it shall furthermore be checked by the following formula:

$$N_i^{pj} = \frac{2htf_v}{\sin\theta_i} \qquad (10.3.4\text{-}3)$$

where f_k——design value of chord strength : for bracing in tension , $f_k = f$; for bracing in compression, $f_k = 0.8\varphi f$, for T, Y joints and $f_k = (0.65 \sin\theta_i)\varphi f$, for X joint; φ is the stability factor of axially loaded compression members determined according to the slenderness ratio $\lambda = 1.73(\frac{h}{t} - 2)(\frac{1}{\sin\theta_i})^{0.5}$;

f_v——design value of shear strength of chord steel.

3) When $0.85 < \beta < 1.0$, the design value of capacity of bracing at joints shall be determined by linear interpolation of Formulae (10.3.4-1) and (10.3.4-2) or (10.3.4-3) according to β. In addition, it shall not exceed the values calculated by the following two formulae:

$$N_i^{pj} = 2.0(h_i - 2t_i + b_e)t_i f_i \qquad (10.3.4\text{-}4)$$

$$b_e = \frac{10}{b/t} \cdot \frac{f_y t}{f_{yi} t_i} \cdot b_i \leqslant b_i$$

Table 10.3.4 Geometric parameter range of validity for the joints between rectangular tubes

Type of member section		Type of joints	Joint parameters, $i=1$ or $i=2$ for bracings; j—for overlapped bracing					
			$\frac{b_i}{b}, \frac{h_i}{b}$ $\left(\text{or } \frac{d_i}{b}\right)$	$\frac{b_i}{t_i}, \frac{h_i}{t_i}$ $\left(\text{or } \frac{d_i}{t_i}\right)$		$\frac{h_i}{b_i}$	$\frac{b}{t}$, $\frac{h}{t}$	a or O_v $\frac{b_i}{b_j}, \frac{t_i}{t_j}$
				compression	tension			
Rectangular chords	Rectangular bracings	T, Y, X	$\geqslant 0.25$	$\leqslant 37\sqrt{\frac{235}{f_{yi}}}$ $\leqslant 35$	$\leqslant 35$	$0.5 \leqslant \frac{h_i}{b_i} \leqslant 0.2$	$\leqslant 35$	$0.5(1-\beta) \leqslant \frac{a}{b} \leqslant 1.5(1-\beta)^*$ $a \geqslant t_1 + t_2$
		Gap K, N	$\geqslant 0.1 + \frac{0.01b}{t}$ $\beta \geqslant 0.35$					
		Overlap K, N	$\geqslant 0.25$	$\leqslant 33\sqrt{\frac{235}{f_{yi}}}$			$\leqslant 40$	$25\% \leqslant O_v \leqslant 100\%$ $\frac{t_i}{t_j} \leqslant 1.0$, $1.0 \geqslant \frac{b_i}{b_j} \geqslant 0.75$
	Circular bracings		$0.4 \leqslant \frac{d_i}{b} \leqslant 0.8$	$\leqslant 44\sqrt{\frac{235}{f_{yi}}}$	$\leqslant 50$	Limitations as above but with d_i replacing b_i		

Note: 1 At the symbol*, if $a/b > 1.5(1-\beta)$, treat as a T or Y-joint;

2 b_i, h_i, t_i——external width, depth and wall thickness respectively of the i-th rectangular bracing;

d_i, t_i——external diameter and wall thickness respectively of the i-th circular bracing;

b, h, t——external width, depth and wall thickness respectively of rectangular chord;

a——gap between the bracings, see Fig. 10.3.4;

O_v——overlap ratio, see the Clause 10.2.3;

β——parameter; $\beta = \frac{b_i}{b}$ or $\frac{d_i}{b}$, for T, Y, X joints; $\beta = \frac{b_1 + b_2 + h_1 + h_2}{4b}$ or $\beta = \frac{d_1 + d_2}{2b}$, for K, N joints;

f_{yi}——steel yield strength of the i-th bracing.

When $0.85 \leqslant \beta \leqslant 1 - \frac{2t}{b}$

$$N_i^{pj} = 2.0\left(\frac{h_i}{\sin\theta_i} + b_{ep}\right)\frac{tf_v}{\sin\theta_i} \tag{10.3.4-5}$$

$$b_{ep} = \frac{10}{b/t} \cdot b_i \leqslant b_i$$

where h_i, t_i, f_i——external depth, wall thickness, design value of tensile (compressive and bending) strength of bracing respectively.

2 Gap K and N-joints with rectangular bracings (Fig. 10.3.4c):

1) The design value of capacity for any bracing at the joints shall not exceed the lesser value determined from the following formulae:

$$N_i^{pj} = 1.42 \frac{b_1 + b_2 + h_1 + h_2}{b\sin\theta_i} (\frac{b}{t})^{0.5} t^2 f \psi_n \qquad (10.3.4\text{-}6)$$

$$N_i^{pj} = \frac{A_v f_v}{\sin\theta_i} \qquad (10.3.4\text{-}7)$$

$$N_i^{pj} = 2.0(h_i - 2t_i + \frac{b_i + b_e}{2}) t_i f_i \qquad (10.3.4\text{-}8)$$

When $\beta \leqslant 1 - \frac{2t}{b}$, it shall furthermore not exceed:

$$N_i^{pj} = 2.0(\frac{h_i}{\sin\theta_i} + \frac{b_i + b_{ep}}{2}) \frac{t f_v}{\sin\theta_i} \qquad (10.3.4\text{-}9)$$

where A_v——shear area of the chord determined from the following:

$$A_v = (2h + \alpha b) t \qquad (10.3.4\text{-}10)$$

$$\alpha = \sqrt{\frac{3t^2}{3t^2 + 4a^2}} \qquad (10.3.4\text{-}11)$$

2) The design value of capacity in the axially loaded chord at the gap of the joint shall be calculated by following formula:

$$N^{pj} = (A - \alpha_v A_v) f \qquad (10.3.4\text{-}12)$$

where α_v——interaction factor used to consider the reduction of axial load capacity of the chord, due to shear, determined from the following:

$$\alpha_v = 1 - \sqrt{1 - (\frac{V}{V_p})^2} \qquad (10.3.4\text{-}13)$$

$$V_p = A_v f_v$$

V——shear force in the chord at the gap, taking the vertical component of the force in any one bracing.

3 Overlap K and N-joints with rectangular bracings (Fig. 10.3.4d):

The design values of capacity of overlapping bracing shall be calculated by Formulae (10.3.4-14) through (10.3.4-16), according to different overlap ratios (subscript j to denote the overlapped bracing):

1) When $25\% \leqslant O_v < 50\%$

$$N_i^{pj} = 2.0\left[(h_i - 2t_i) \frac{O_v}{0.5} + \frac{b_e + b_{ej}}{2}\right] t_i f_i \qquad (10.3.4\text{-}14)$$

$$b_{ej} = \frac{10}{b_j / t_j} \cdot \frac{t_j f_{yj}}{t_i f_{yj}} \cdot b_i \leqslant b_i$$

2) When $50\% \leqslant O_v < 80\%$

$$N_i^{pj} = 2.0\left(h_i - 2t_i + \frac{b_e + b_{ej}}{2}\right) t_i f_i \qquad (10.3.4\text{-}15)$$

3) When $80\% \leqslant O_v \leqslant 100\%$

$$N_i^{pj} = 2.0\left(h_i - 2t_i + \frac{b_i + b_{ej}}{2}\right) t_i f_i \qquad (10.3.4\text{-}16)$$

The capacity of overlapped bracing shall satisfy the following requirement:

$$\frac{N_j^{pj}}{A_j f_{yj}} \leqslant \frac{N_i^{pj}}{A_i f_{yi}} \tag{10.3.4-17}$$

4 Various joints with circular bracings:

For the joints with circular bracings, all the above capacity formulae are still applicable, but with d_i replacing b_i and h_i, multiplying the right side of the above formulae by $\pi/4$, and taking the α equal to zero in the Formula (10.3.4-10).

11 Composite steel and concrete beams

11.1 General stipulations

11.1.1 The provisions in this chapter generally apply to the composite beam composed of concrete flange and steel beam interconnected by shear connectors, not subject to dynamic loading directly.

The flange of composite beam may be in-situ concrete slab, concrete laminated slab or profiled composite slab with profiled steel sheeting. The concrete slab shall be designed in accordance with the current national standard "Code for design of concrete structures" GB 50010.

11.1.2 The effective width of concrete flange b_e (Fig. 11.1.2) shall be determined as follows:

$$b_e = b_0 + b_1 + b_2 \tag{11.1.2}$$

where b_0——width of the top of concrete haunch, calculated with $\alpha = 45°$, when $\alpha < 45°$, where α is the inclination of haunch, and taken as the width of top flange of steel beam when there is no concrete haunch;

b_1, b_2——effective widths of concrete flanges on the outer side and inner side of the steel beam respectively, each taken as the lesser of 1/6 of the beam span l and 6 times the thickness of concrete flange h_{c1}. Besides, b_1 shall not exceed the actual overhanging width of the concrete flange s_1; b_2 shall not exceed 1/2 of the clear distance s_0 between two adjacent top flanges of steel beams or concrete haunches. b_1 is equal to b_2 in Eq(11.1.2) when the composite beam is an intermediate beam.

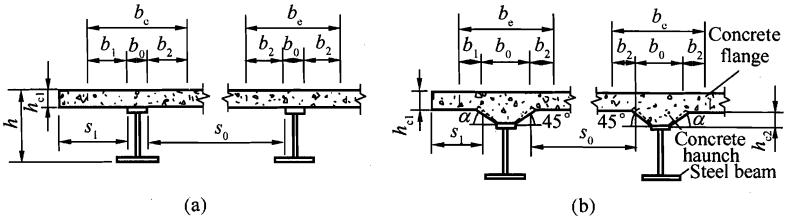

Fig. 11.1.2 Effective width of concrete flange

In Fig. 11.1.2, h_{c1} is the thickness of concrete flange. When using the composite slab with profiled steel sheeting, h_{c1} is equal to the overall thickness of composite slab minus the depth of ribs of profiled steel sheeting. However, when determining the effective width of composite slab with profiled steel sheeting, h_{c1} may be taken as the overall thickness of concrete slab at ribs. h_{c2} is the depth of concrete haunch; $h_{c2} = 0$ when there is no haunch.

11.1.3 The deflection of composite beams (including composite beams with partial shear connection and composite beams composed of steel beams and composite slabs) shall be determined using the elastic analysis method, and the bending stiffness of composite beams shall be reduced in accordance with Clause 11.4.2 to consider the effect of slip between the concrete slab and the steel beam.

For continuous composite beams, within the region of $0.15l$ (l is the span of beam) each side from the internal support, the effect of concrete in tension to the stiffness of the beam is neglected, but the effect of longitudinal reinforcement within the effective width of concrete slab b_e shall be considered. In other regions, the reduced stiffness shall be used. Besides checking the deflection by the method mentioned above, the maximum crack width w_{max} in negative moment region shall be checked according to the current national standard "Code for design of concrete structures"GB 50010.

The cross-section of concrete haunch may be neglected in the calculation of strength, deflection and crack of composite beams.

The longitudinal shear of concrete slab shall be checked according to related specifications.

11.1.4 When the steel beam is not propped during construction of the composite beam, the weight of materials and the construction loads applied prior the hardening of concrete shall be carried by the steel beam. The strength, stability and deflection of the steel beam shall be calculated according to the provisions in Chapter 3 and Chapter 4. In service stage after construction, the deflection of composite beam by additional loads shall be superimposed upon the deflection of steel beam during construction.

11.1.5 While satisfying the strength and deflection requirements, if the shear connectors at the interface of composite beams could not provide adequate longitudinal horizontal shearing resistance to guarantee the moment resistance capacity at the cross-section of maximum positive moment to develop sufficiently, the composite beam may be designed as that with partial shear connection. The composite beam using profiled steel sheeting as formwork may also be designed as composite beams with partial shear connection. The partial shear connection may only be used in composite beams with uniform cross-section, whose span should not be greater than 20m.

11.1.6 When the strength of composite beams is calculated according to this chapter, considering development of plasticity over the entire composite cross-section, the design value of strength f of the steel beam shall be taken as that specified in Clauses 3.4.1 and 3.4.2. If the thicknesses of the composing plate elements are not equal, the design value of steel strength of the thickest plate may be taken as the unified one. The design value of strength of reinforcement bars in negative moment region shall be taken in accordance with the provisions of the current national standard "Code for design of concrete structures" GB 50010. If elastic analysis method is used in calculating continuous composite beams, the moment redis-

tribution coefficient considering the plastic development should not be greater than 15%.

In the compression region of composite beams, the width-to-thickness ratio of steel plates shall satisfy the requirements of Clause 9.1.4 in Chapter 9.

11.2 Design of composite beams

11.2.1 The bending strength of composite beams with full shear connection shall be calculated according to the following provisions:

1 The positive moment region:

1) When the plastic neutral axis is within the concrete flange (Fig.11.2.1-1), that is, when $Af \leqslant b_e h_{c1} f_c$:

$$M \leqslant b_e x f_c y \tag{11.2.1-1}$$

$$x = Af/(b_e f_c) \tag{11.2.1-2}$$

where M——design value of positive moment;

A——cross-sectional area of steel beam;

x——depth of the compression zone of concrete flange;

y——distance between the stress resultant of steel beam section and that of the compression zone of concrete section;

f_c——design value of the compressive strength of concrete.

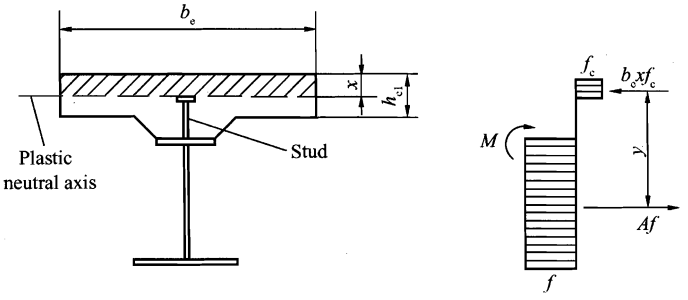

Fig.11.2.1-1 Cross-section and stress diagram of composite beams with plastic neutral axis in concrete flange

2) When the plastic neutral axis is within the steel beam cross-section (Fig.11.2.1-2), that is, when $Af > b_e h_{c1} f_c$:

$$M \leqslant b_e h_{c1} f_c y_1 + A_c f y_2 \tag{11.2.1-3}$$

$$A_c = 0.5(A - b_e h_{c1} f_c / f) \tag{11.2.1-4}$$

where A_c——area of the compression zone of steel beam section;

y_1——distance between the centroid of the tension zone of steel beam section and that of the compression zone of concrete flange section;

y_2——distance between the centroid of the tension zone of steel beam section and that of the compression zone of steel beam section.

2 The negative moment region (Fig.11.2.1-3):

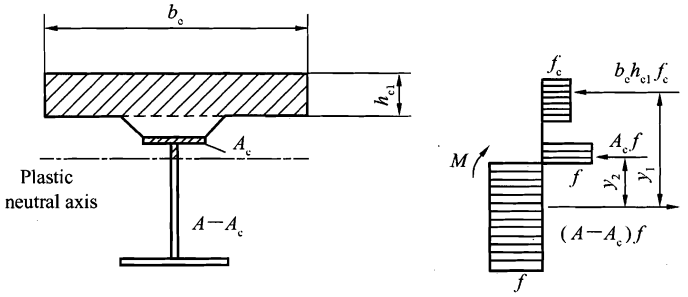

Fig. 11.2.1-2 Cross-section and stress diagram of composite beam with plastic neutral axis in steel beam

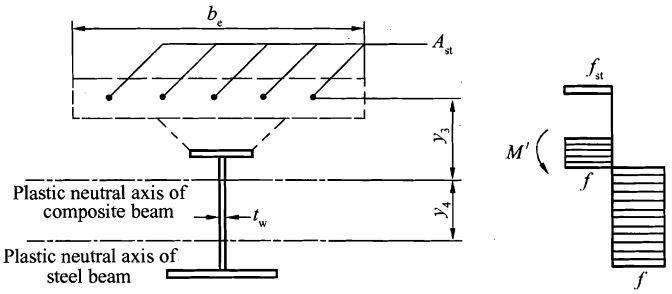

Fig. 11.2.1-3 Cross-section and stress diagram of composite beams under negative moment

$$M' \leqslant M_s + A_{st} f_{st} (y_3 + y_4/2) \qquad (11.2.1\text{-}5)$$

$$M_s = (S_1 + S_2) f \qquad (11.2.1\text{-}6)$$

where M'——design value of negative moment;

S_1, S_2——static moment about the plastic neutral axis of steel beam (the axis dividing the aera of steel beam section equally)of the section above and below the axis respectively;

A_{st}——sectional area of longitudinal reinforcement within the effective width of concrete flange in negative moment region;

f_{st}——design value of tensile strength of reinforcement;

y_3——distance between the centroid of the longitudinal reinforcment and the plastic neutral axis of composite beam;

y_4——distance between the plastic neutral axis of composite beam and that of steel beam. It shall be taken as $y_4 = A_{st} f_{st}/(2 t_w f)$ when the plastic neutral axis of composite beam is within the web of steel beam; and y_4 may be taken as the distance between the plastic neutral axis of steel beam and the top edge of the web of steel beam when the plastic neutral axis is in the flange of steel beam.

11.2.2 The bending strength of composite beams with partial shear connection in positive moment region shall be calculated in accordance with the following formulae (Fig. 11.2.2):

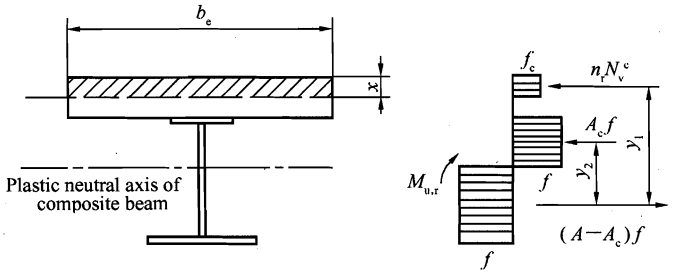

Fig. 11.2.2 Calculation diagram of composite beams with partial shear connection

$$x = n_r N_v^c / (b_e f_c) \tag{11.2.2-1}$$

$$A_c = (Af - n_r N_v^c)/(2f) \tag{11.2.2-2}$$

$$M_{u,r} = n_r N_v^c y_1 + 0.5(Af - n_r N_v^c) y_2 \tag{11.2.2-3}$$

where $M_{u,r}$——bending resistance of composite beams with partial shear connection;

n_r——number of shear connectors in one shear span of composite beams with partial shear connection;

N_v^c——longitudinal shear capacity of a shear connector, calculated in accordance with the relevant formulae in Section 11.3.

The bending strength of composite beams with partial shear connection in negative moment region shall be determined with the lesser of $n_r N_v^c$ and $A_{st} f_{st}$

11.2.3 The total shear force of the composite beam section is assumed to be resisted by the web plate of steel beam alone and shall be calculated in accordance with Formula (9.2.2).

11.2.4 When the plastic design method is used to calculate the strength of composite beams, the interaction effect of moment and shear may be neglected in the following locations:

1 Cross-section of composite beams subject to positive moment;

2 Cross-section of composite beams subject to negative moment when $A_{st} f_{st} \geqslant 0.15Af$.

11.3 Calculation of shear connectors

11.3.1 It is suitable to adopt studs as shear connectors of composite beams; channels, bent-up bars and other types of reliable shear connectors may also be used. The arrangements of stud, channel and bent-up bar connectors are shown in Fig. 11.3.1; the design value of shear capacity of a shear connector may be determined by the following formulae:

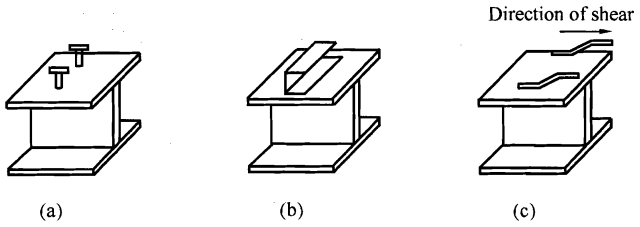

Fig. 11.3.1 Appearances and arrangements of shear connectors
(a)Stud shear connector; (b)Channel connector; (c)Bent-up bar connector

1 Headed welded stud connector:

$$N_v^c = 0.43A_s\sqrt{E_c f_c} \leqslant 0.7A_s\gamma f \qquad (11.3.1\text{-}1)$$

where E_c——elastic modulus of concrete;

A_s——cross-sectional area of the shank of headed welded stud;

f——design value of tensile strength of headed welded stud;

γ——ratio of the minimum tensile strength and the yield strength of the material of stud. $f = 215\text{N/mm}^2$ and $\gamma = 1.67$ when the material property grade of stud is 4.6.

2 Channel connector:

$$N_v^c = 0.26(t + 0.5t_w)l_c\sqrt{E_c f_c} \qquad (11.3.1\text{-}2)$$

where t——mean thickness of the flange of channel;

t_w——thickness of the web of channel;

l_c——length of channel.

Channel connectors are connected to steel beam by two full-length fillet welds at the tip and the back of the flange of channel. The fillet welds shall be calculated to resist the design value of shear capacity of the connector N_v^c.

3 Bent-up bar connector:

$$N_v^c = A_{st}f_{st} \qquad (11.3.1\text{-}3)$$

where A_{st}——cross-sectional area of the bar;

f_{st}——design value of tensile strength of the bar.

11.3.2 For the composite beams with composite slab using profiled steel sheeting as flange (Fig. 11.3.2), the design value of shear capacity of stud connectors shall be reduced according to the following two situations:

1 When the ribs of profiled steel sheeting run parallel to the steel beam (Fig. 11.3.2a), and $b_w/h_e < 1.5$, N_v^c calculated in accordance with Formula (11.3.1-1)

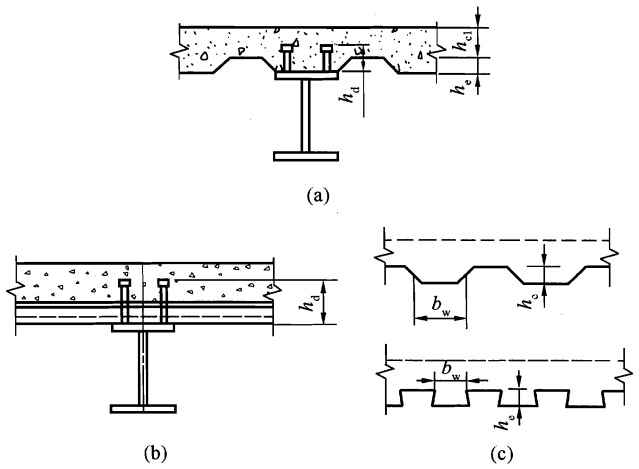

Fig. 11.3.2 Composite beams with composite slab using profiled steel sheeting as flange

(a)Cross-section of composite beams with composite slab using profiled steel sheeting(ribs parallel to steel beam); (b)Cross-section of composite beams with composite slab using profiled steel sheeting(ribs perpendicular to steel beam); (c)Cross-section of composite slab with profiled steel sheeting

shall be reduced by multiplying a reduction factor β_v, determined by the following formula:

$$\beta_v = 0.6\frac{b_w}{h_e}\left(\frac{h_d - h_e}{h_e}\right) \leqslant 1 \qquad (11.3.2\text{-}1)$$

where b_w——mean width of concrete ribs, taken as the upper width of concrete ribs if the latter is less than the lower width (Fig. 11.3.2c).

h_e——depth of concrete rib;

h_d——height of stud.

2 When the ribs of profiled steel sheeting run perpendicular to steel beam (Fig. 11.3.2b), the reduction factor for design shear capacity of stud connector shall be determined by the following formula:

$$\beta_v = \frac{0.85}{\sqrt{n_0}}\frac{b_w}{h_e}\left(\frac{h_d - h_e}{h_e}\right) \leqslant 1 \qquad (11.3.2\text{-}2)$$

where n_0——number of studs in one rib of a certain cross-section of beam, taken as 3 when it is greater than 3.

11.3.3 For the shear connectors in negative moment region, the design value of shear capacity N_v^c shall be reduced by multiplying reduction factor 0.9(beside the mid support)and 0.8 (in the overhanging region).

11.3.4 The calculation of shear connectors shall be carried out successively for each shear span

(Fig. 11.3.4) which is a beam segment between the section of maximum bending moment, positive or negative, and the adjacent section of zero moment. The longitudinal shear V_s at the interface of steel beam and concrete flange in each shear span shall be determined as follows:

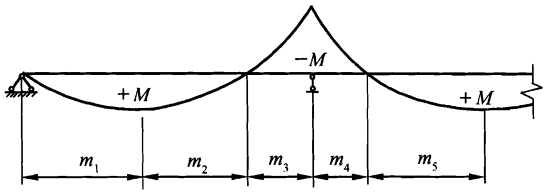

Fig. 11.3.4 Division diagram of shear spans of continuous beam

1 V_s shall be taken as the lesser of Af and $b_e h_{c1} f_c$ for the shear span in the positive moment region.

2 For the shear span in the negative moment region:

$$V_s = A_{st} f_{st} \tag{11.3.4-1}$$

If the composite beams are designed as beams with full shear connection, the total number of shear connectors required in each shear span, n_f, shall be determined by the following formula:

$$n_f = V_s / N_v^c \tag{11.3.4-2}$$

For composite beams with partial shear connection, the actual number of shear connectors used shall not be less than 50% of n_f.

The number of shear connectors determined by Formula (11.3.4-2) may be arranged uniformly in the corresponding shear span. If there is any comparatively large concentrated load in the shear span, the number of shear connectors n_f shall be divided in parts according to the ratio of areas of shear diagram and then arranged uniformly in each part.

Note: If the stud and channel shear connectors are used, the shear spans m_2 and m_3, m_4 and m_5 in Fig. 11.3.4 may be combined respectively for the arrangement of shear connectors; after the combination, the longitudinal shear in combined region shall be taken as $V_s = b_e h_{c1} f_c + A_{st} f_{st}$. It is proposed to use full shear connection in the combined regions.

11.4 Calculation of deflection

11.4.1 The deflection of composite beams shall be calculated for the characteristic combination of load effects and the quasi-permanent combination of load effects respectively, and take the greater one as the basis. The deflection may be determined from the relevant formulae in Structural Mechanics. The bending stiffness shall be taken as the reduced stiffness considering the effect of slip for the composite beams subject to positive moment only, and shall be treated as variable cross-section stiffness (see Clause 11.1.3) for continuous composite

beams. For the two combinations of load effects mentioned above, the stiffness of composite beams shall be taken as the reduced stiffness corresponding to each combination.

11.4.2 The reduced stiffness of composite beams considering the effect of slip, B, may be determined by the following formula:

$$B = \frac{EI_{eq}}{1 + \zeta} \tag{11.4.2}$$

where E——elastic modulus of steel beam;

I_{eq}——moment of inertia of transformed cross-section of composite beam. The moment of inertia of the whole transformed section may be calculated after transforming the concrete area to equivalent steel one by dividing the effective width of concrete flange by the elastic modular ratio of steel to concrete, α_E, for the characteristic combination of load effects, and dividing it by $2\alpha_E$ for the quasi-permanent combination of load effects. For the composite beams composed by steel beam and composite slab with profiled steel sheeting, the calculation shall be carried out at the weaker cross-section of the beam, and the effect of profiled steel sheeting should be neglected.

ζ——reduction coefficient of stiffness, calculated in accordance with Clause 11.4.3.

11.4.3 The reduction coefficient of stiffness ζ is calculated as follows (when $\zeta \leqslant 0$, take $\zeta = 0$):

$$\zeta = \eta\left[0.4 - \frac{3}{(jl)^2}\right] \tag{11.4.3-1}$$

$$\eta = \frac{36Ed_c pA_0}{n_s khl^2} \tag{11.4.3-2}$$

$$j = 0.81\sqrt{\frac{n_s kA_1}{EI_0 p}} \quad (\text{mm}^{-1}) \tag{11.4.3-3}$$

$$A_0 = \frac{A_{cf}A}{\alpha_E A + A_{cf}} \tag{11.4.3-4}$$

$$A_1 = \frac{I_0 + A_0 d_c^2}{A_0} \tag{11.4.3-5}$$

$$I_0 = I + \frac{I_{cf}}{\alpha_E} \tag{11.4.3-6}$$

where A_{cf}——area of concrete flange section; taken as the area of the weaker cross-section neglecting the profiled steel sheeting for the flanges of composite slab with profiled steel sheeting;

A——area of steel beam section;

I——moment of inertia of steel beam cross-section;

I_{cf}——moment of inertia of concrete flange cross-section; taken as the moment of inertia of the weaker cross-section neglecting the profiled steel sheeting for the flanges of composite slab with profiled steel sheeting;

d_c——distance between the centroid of the section of steel beam and that of concrete flange (taken as the weaker cross-section for composite slab with profiled steel sheeting);

h——depth of cross-section of composite beam;

l——span of composite beam(mm);

k——stiffness factor of shear connector, $k = N_v^c$ (N/mm);

p——average longitudinal spacing between shear connectors(mm);

n_s——number of rows of shear connectors on one beam;

α_E——elastic modular ratio of steel to concrete.

Note: When calculating for the quasi-permanent combination of load effects, α_E, in Formulae(11.4.3-4) and (11.4.3-6) shall be multiplied by 2.

11.5 Detailing requirements

11.5.1 The depth of cross-section of composite beams should not be greater than 2.5 times the depth of cross-section of steel beams; the depth of concrete haunch h_{c2} should not be greater than 1.5 times the thickness of concrete flange h_{c1}; the width of the top of concrete haunch should not be less than the sum of the width of top flange of steel beam and $1.5h_{c2}$.

11.5.2 The detailing of concrete flange of boundary composite beams shall satisfy the requirements of Fig.11.5.2. For beams with concrete haunch, the overhanging length should not be less than h_{c2}; for beams without concrete haunch, the overhanging length from the center line of steel beam shall not be less than 150mm, and that from the flange edge of steel beam shall not be less than 50mm.

11.5.3 For the continuous composite beams, the longitudinal bars and distribution bars in the negative moment region at the internal support shall be placed in accordance with the current national standards "Code for design of concrete structures"GB 50010.

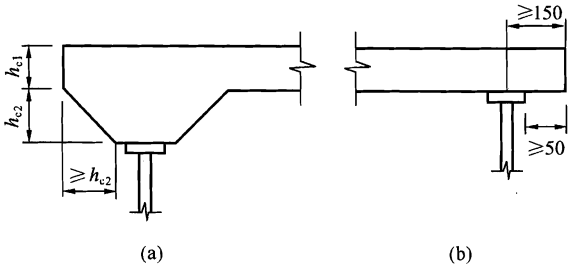

Fig. 11.5.2 Detailing of boundary beams

11.5.4 The arrangement of shear connectors shall be in accordance with following provisions:

1 The distance from the bottom of the head of stud connectors or the bottom of the top flange of channel connectors to the top of bottom steel reinforcing bars in concrete flange should not be less than 30mm;

2 The maximum spacing between the connectors in the direction of beam span shall not be greater than 4 times the thickness of concrete flange (including concrete haunch), and shall not be greater than 40mm;

3 The distance between the exterior margin of connector and the edge of flange of steel beam shall not be less than 20mm;

4 The distance between the exterior margin of connector and the edge of concrete flange shall not be less than 100mm;

5 The thickness of concrete cover above the top of the connectors shall not be less than 15mm.

11.5.5 Besides the requirements in Clause 11.5.4, the stud connectors shall also conform to the following provisions;

1 When the stud is not aligned with the web plate of steel beam, if the top flange of steel beam is in tension, the diameter of the stud shall not be greater than 1.5 times the thickness of the top flange of steel beam; and if the top flange of steel beam is not in tension, the diameter of the stud shall not be greater than 2.5 times the thickness of the top flange of steel beam;

2 The length of the stud shall not be less than 4 times the diameter of the stud;

3 The spacing of studs along the direction of beam span shall not be less than 6 times the diameter of the stud; and the spacing of studs perpendicular to the direction of beam span shall not be less than 4 times the diameter of the stud;

4 For the composite beams using profiled steel sheeting as formwork, the diameter of stud should not be greater than 19mm, the width of concrete protuberant ribs shall not be less than 2.5 times the diameter of stud; the length of stud shall satisfy $(h_e + 30) \leqslant h_d \leqslant (h_c + 75)$ (Fig.11.3.2).

11.5.6 Besides the requirements in Clause 11.5.4, the bent-up bar connectors shall yet satisfy the following provisions: the bar connectors should be made from reinforcing bars of diameter not less than 12mm, and be arranged in pairs; the connectors should be welded onto the flange of steel beam by two side welds, the length of which should not be less than 4 times (grade Ⅰ reinforcing steel bar) or 5 times (grade Ⅱ reinforcing steel bar) the diameter of steel bar; the angle of bending is 45° in general, and the direction of bending shall be consistent with that of the horizontal shear between the concrete flange and the steel beam. In the mid-span where the direction of longitudinal horizontal shear changes, bars must be arranged in both directions. The length of the bar from the point of bending to its end should not be less than 25 times its diameter (a hook shall be added at the end for grade I reinforcing steel bar), in which the length of horizontal segment should not be less than 10

times its diameter. The spacing of bar connectors in the direction of beam span should not be less than 0.7 times the thickness of concrete flange (including the thickness of concrete haunch).

11.5.7 Generally, Q235 steel is used for channel connectors, and its cross-section should not be larger than [12.6.

11.5.8 The top surface of the steel beam shall not be painted. Before casting (or erecting) the concrete flange, rust, welding slag, ice piece, snow, earth and other miscellaneous things shall be cleaned out.

Appendix A Allowable deflection of structures or structural members

A.1 Allowable deflection of flexural members

A.1.1 The deflection of crane girders, floor beams, roof girders, working platform beams and members of wall framing should not exceed the relevant allowable value listed in Table A.1.1.

Table A.1.1 Allowable deflection of flexural members

Item No.	Type of member	Allowable deflection	
		$[v_T]$	$[v_Q]$
1	Crane girders and crane trusses (calculated deflection under self-weight and one of the cranes of largest capacity) (1) For hand operated cranes and monorails(including underslung cranes) (2) For bridge cranes of light duty (3) For bridge cranes of medium duty (4) For bridge cranes of heavy duty	 $l/500$ $l/800$ $l/1000$ $l/1200$	 —
2	Beam-rails for hand operated or electric hoists	$l/400$	—
3	Beams of working platform under track with heavy rail (weighing 38kg/m or more) Beams of working platform under track with light rail(weighing 24kg/m or less)	$l/600$ $l/400$	—
4	Floor(roof) beams or trusses, platform beams(except Item No.3) and platform slabs (1) Main girders or trusses (including those with underslung hoisting equipment) (2) Beams with plastered ceiling (3) Beams other than Item No.1 and 2(including stair beams) (4)Purlins under roofing of corrugated iron and asbestos sheet with no dust accumulation profiled metal sheet, corrugated iron and asbestos sheet etc. with dust accumulation other material (5) Platform slabs	 $l/400$ $l/250$ $l/250$ $l/150$ $l/200$ $l/200$ $l/150$	 $l/500$ $l/350$ $l/300$ — — — —
5	Members of wall framing (taking no account of gust coefficient for wind load) (1) Stud (2) Wind truss (acting as support to continuous stud) (3) Girt (horizontal) in masonry wall (4)Girt(horizontal) for cladding of profiled metal sheet, corrugated iron and asbestos sheet (5) Girt (vertical and horizontal) for glass window	 — — — — $l/200$	 $l/400$ $l/1000$ $l/300$ $l/200$ $l/200$

Note: 1 l denotes the span length of a flexural member (for cantilever beam and overhanging beam, is twofold the overhang).

2 $[v_T]$ is the allowable deflection under the characteristic value of permanent and variable load (the camber shall be deducted if there exists any);
$[v_Q]$ is the allowable deflection under the characteristic value of variable load.

A.1.2 In metallurgical works and similar workshop equipped with cranes of category A7, A8, the deflection of the surge girder on each side of the bay, caused by transverse horizontal load (conforming to the Load Code) from one of the cranes of largest capacity, should not exceed 1/2200 of its span length.

A.2 Allowable horizontal displacement of framed structures

A.2.1 The horizontal displacement of the column top and the story drift in a frame should not exceed the following values under the action of unfactored wind load.

1 Column top displacement of single story frame without bridge crane $H/150$

2 Column top displacement of single story frame equipped with bridge crane $H/400$

3 Column top displacement of multistory frame $H/500$

4 Story drift of multistory frame $h/400$

H is the total height from top of foundation to column top; h is the story height.

Note: 1 For multistory framed structure of a civil building requiring refined indoor decoration, the story drift should be reduced appropriately. For multistory frames without wall, the story drift may be appropriately enlarged.

2 For light frame structures, both the column top displacement and the story drift may be enlarged appropriately.

A.2.2 In metallurgical works and similar workshop equipped with cranes of category A7, A8 and for open-air gantry columns equipped with medium and heavy duty cranes, the calculated deformation of the column, caused by the horizontal load from one of the cranes of largest capacity, at the top elevation of the crane girder or crane truss, should not exceed the relevant allowable value given in Table A.2.2 (the magnitude of load conforming with the Load Code).

Table A.2.2 Allowable value of column horizontal displacement (calculated value)

Item No.	Type of displacement	Calculation based on	
		plane structure scheme	space structure scheme
1	Transverse displacement of mill building columns	$H_c/1250$	$H_c/2000$
2	Transverse displacement of open-air gantry columns	$H_c/2500$	—
3	Longitudinal displacement of columns of mill building and open-air gantry	$H_c/4000$	—

Note: 1 H_c denotes the height from the foundation top to the top of the crane girder or truss.

2 In the calculation of longitudinal displacement of mill building or open-air gantry column, the longitudinal load of the crane may be distributed to all the inter-column bracings or longitudinal frame, in a section between expansion points.

3 For mill buildings equipped with cranes of category A8, the allowable calculated displacement of the columns should be reduced by 10%.

4 For mill buildings equipped with cranes of category A6, the longitudinal displacement of the columns should comply with the requirement of this table.

Appendix B Overall stability factor of beams

B.1 Simply supported beam of uniform welded I- and rolled H-section

The overall stability factor, φ_b, of simply supported beams of uniform welded I-and rolled H-section (Fig.B.1) shall be determined by the following formula:

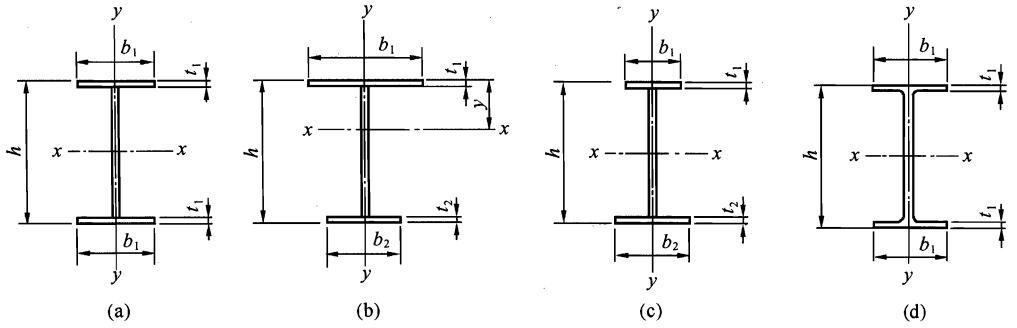

Fig.B.1 Welded I- and rolled H-section
(a)Doubly symmetric welded I-scction; (b)Monosymmetric welded I-section with enlarged comprcssion flange; (c)Monosymmetric welded I-section with enlarged tension flange; (d)Rolled H-section

$$\varphi_b = \beta_b \frac{4320}{\lambda_y^2} \cdot \frac{Ah}{W_x} \left[\sqrt{1 + \left(\frac{\lambda_y t_1}{4.4h} \right)^2} + \eta_b \right] \frac{235}{f_y} \qquad \text{(B.1-1)}$$

where β_b——factor of equivalent critical moment for overall stability of beams, given in Table B.1;

λ_y——slenderness ratio about the weak axis y-y of the portion of the beam between laterally supported points, $\lambda_y = l_1/i_y$, l_1 taken as in Clause 4.2.1, i_y being the radius of gyration of the gross section about the y-axis;

A——gross sectional area of the beam;

h, t_1——beam depth and thickness of the compression flange, respectively;

η_b——factor of unsymmetry of a beam section:

For doubly symmetric section (see Fig.B.1a,d) $\eta_b = 0$

For monosymmetric I-section (see Fig.B.1b,c)

With enlarged compression flange $\eta_b = 0.8(2\alpha_b - 1)$

With enlarged tension flange $\eta_b = 2\alpha_b - 1$

$\alpha_b = \dfrac{I_1}{I_1 + I_2}$——$I_1$ and I_2 being the moment of inertia about y-axis of the compression and

tension flanges respectively.

When the value of φ_b calculated according to Formula (B.1-1) is larger than 0.60, they shall be replaced by the corresponding values of φ'_b given by the following formula:

$$\varphi'_b = 1.07 - 0.282/\varphi_b \leqslant 1.0 \qquad \text{(B.1-2)}$$

Note: The Formula (B.1-1) also applies to simply supported riveted (or high-strength-bolted) beams of uniform section. The thickness of compression flange t_1 of these beams includes that of the flange angle.

Table B.1 Factor β_b for simply supported beams of uniform I- and H-section

Item No.	Lateral support	Loading		$\xi \leqslant 2.0$	$\xi > 2.0$	Applicability
1	No intermediate lateral support	Uniform load acting at	upper flange	$0.69+0.13\xi$	0.95	Only for sections a, b and d in Fig.B.1
2			lower flange	$1.73-0.20\xi$	1.33	
3		Concentrated load acting at	upper flange	$0.73+0.18\xi$	1.09	
4			lower flange	$2.23-0.28\xi$	1.67	
5	One lateral support at mid-span	Uniform load acting at	upper flange	1.15		For all sections of Fig.B.1
6			lower flange	1.40		
7		Concentrated load acting at any level		1.75		
8	Not less than two intermediate equally spaced lateral supports	Any kind of load acting at	upper flange	1.20		
9			lower flange	1.40		
10	Subjected to end moments, without any transverse load within the span			$1.75-1.05\left(\frac{M_2}{M_1}\right)+0.3\left(\frac{M_2}{M_1}\right)^2$, but not larger than 2.3		

Note: 1 $\xi = l_1 t_1 / b_1 h$—parameter, see Clause 4.2.1 for the values of b_1 and l_1.

2 M_1、M_2 are end moments of the beam, having same sign when causing curvatures of same sign and vice versa, $|M_1| \geqslant |M_2|$.

3 Concentrated loading in Item Nos.3,4 and 7 denotes one single load or a few concentrated loads near the mid-span. For other cases of concentrated loading β_b shall be taken from Item Nos.1,2,5 and 6.

4 In Item Nos.8 and 9, β_b shall be taken equal to 1.20 when concentrated loads act on the laterally supported points.

5 Loading acting at the upper flange means that acting on the flange surface and pointing toward the centroid of cross section in direction; loading acting at the lower flange means that acting on the flange surface but pointing away from the centroid in direction.

6 For I-section with enlarged compression flange so as $\alpha_b > 0.8$, the value of β_b shall be multiplied by a coefficient as follows:

0.95 for Item No.1, when $\xi \leqslant 1.0$;

0.90 for Item No.3, when $\xi \leqslant 0.5$;

0.95 for Item No.3, when $0.5 < \xi \leqslant 1.0$.

B.2 Simply supported beam of regular rolled I-section

The overall stability factor, φ_b, of simply supported beams of regular rolled I-section shall

be taken from Table B.2. Values of φ_b larger than 0.6 shall be replaced by the corresponding values of φ'_b computed by Formula (B.1-2).

Table B.2 Factor φ_b of simply supported beams of regular rolled I-section

Item No.	Loading pattern			I-section designation	Unsupported length l_1(m)								
					2	3	4	5	6	7	8	9	10
1	No intermediate lateral support	Concentrated load acting at	Upper flange	10～20	2.00	1.30	0.99	0.80	0.68	0.58	0.53	0.48	0.43
				22～32	2.40	1.48	1.09	0.86	0.72	0.62	0.54	0.49	0.45
				36～63	2.80	1.60	1.07	0.83	0.68	0.56	0.50	0.45	0.40
2			Lower flange	10～20	3.10	1.95	1.34	1.01	0.82	0.69	0.63	0.57	0.52
				22～40	5.50	2.80	1.84	1.37	1.07	0.86	0.73	0.64	0.56
				45～63	7.30	3.60	2.30	1.62	1.20	0.96	0.80	0.69	0.60
3		Uniform load acting at	Upper flange	10～20	1.70	1.12	0.84	0.68	0.57	0.50	0.45	0.41	0.37
				22～40	2.10	1.30	0.93	0.73	0.60	0.51	0.45	0.40	0.36
				45～63	2.60	1.45	0.97	0.73	0.59	0.50	0.44	0.38	0.35
4			Lower flange	10～20	2.50	1.55	1.08	0.83	0.68	0.56	0.52	0.47	0.42
				22～40	4.00	2.20	1.45	1.10	0.85	0.70	0.60	0.52	0.46
				45～63	5.60	2.80	1.80	1.25	0.95	0.78	0.65	0.55	0.49
5	With intermediate lateral support (without regard to the position of load application point along the beam depth)			10～20	2.20	1.39	1.01	0.79	0.66	0.57	0.52	0.47	0.42
				22～40	3.00	1.80	1.24	0.96	0.76	0.65	0.56	0.49	0.43
				45～63	4.00	2.20	1.38	1.01	0.80	0.66	0.56	0.49	0.43

Note: 1 Same as Notes 3 and 5 of Table B.1.

2 Values of φ_b in this table applies to Q235 steel and shall be multiplied by $235/f_y$ for other steel grades.

B.3 Simply supported beams of rolled channel-section

The overall stability factor φ_b of simply supported beams of rolled channel-section shall be calculated by the following expression without regard to the pattern of loading and the position of load application point along the beam depth:

$$\varphi_b = \frac{570bt}{l_1 h} \cdot \frac{235}{f_y} \tag{B.3}$$

where h, b, t——depth, flange width and average flange thickness of the channel section respectively.

Values of φ_b larger than 0.6 obtained from Formula (B.3) shall be replaced by the corresponding values of φ'_b computed by Formula (B.1-2).

B.4 Cantilever beams of doubly symmetric uniform I-section (including rolled H shape)

The overall stability factor, φ_b, for cantilever beams of doubly symmetric I-section (including rolled H shape) may be calculated by Formula (B.1-1) but the factor β_b shall be taken from Table B.4 and l_1 of $\lambda_y = l_1/i_y$ shall be taken as the cantilever length. The

calculated values of φ_b larger than 0.6 shall be replaced by the corresponding values of φ'_b computed by Formula (B.1-2).

Table B.4 Factor β_b for cantilever beams of doubly symmetric I-section (including rolled H shape)

Item No.	Loading pattern		$0.60 \leqslant \xi \leqslant 1.24$	$1.24 < \xi \leqslant 1.96$	$1.96 < \xi \leqslant 3.10$
1	One concentrated load at the free end acting on	Upper flange	$0.21+0.67\xi$	$0.72+0.26\xi$	$1.17+0.03\xi$
2		Lower flange	$2.94-0.65\xi$	$2.64-0.40\xi$	$2.15-0.15\xi$
3	Uniform load acting on the upper flange		$0.62+0.82\xi$	$1.25+0.31\xi$	$1.66+0.10\xi$

Note: 1 This table is based on the condition that the supported end is rigidly restrained. Measures shall be taken to increase the torsional capacity at the support when using values of this table for an overhanging beam extending from adjacent span.

2 For values of ξ, see Note 1 of Table B.1.

B.5 Approximate calculation of overall stability factors

The overall stability factor φ_b of uniformly bent beams, when $\lambda_y \leqslant 120\sqrt{235/f_y}$, may be calculated by the following approximate formulae:

1 I-section (including rolled H shape)

Doubly symmetric:
$$\varphi_b = 1.07 - \frac{\lambda_y^2}{44000} \cdot \frac{f_y}{235} \tag{B.5-1}$$

Monosymmetric:
$$\varphi_b = 1.07 - \frac{W_x}{(2\alpha_b + 0.1)Ah} \cdot \frac{\lambda_y^2}{14000} \cdot \frac{f_y}{235} \tag{B.5-2}$$

2 T-section (moment acting in the plane of symmetric axis, about x-axis):

1) When the flange is in compression under the moment:

T-section composed of twin angles:
$$\varphi_b = 1 - 0.0017\lambda_y\sqrt{f_y/235} \tag{B.5-3}$$

Rolled cut T-section and T-section built-up of two plates:
$$\varphi_b = 1 - 0.0022\lambda_y\sqrt{f_y/235} \tag{B.5-4}$$

2) When the flange is in tension under the moment and web width-thickness ratio not larger than $18\sqrt{235/f_y}$:
$$\varphi_b = 1.0 - 0.0005\lambda_y\sqrt{f_y/235} \tag{B.5-5}$$

Values of φ_b given by Formulae (B.5-1) through (B.5-5) need not be replaced by φ'_b of Formula (B.1-2) when larger than 0.60. Values of φ_b given by Formulae (B.5-1) and (B.5-2) shall be taken as 1.0 when larger than 1.0.

Appendix C Stability factor of axial compression members

Table C-1 Stability factor φ, of axial compression members, for Class a sections

$\lambda\sqrt{\frac{f_y}{235}}$	0	1	2	3	4	5	6	7	8	9
0	1.000	1.000	1.000	1.000	0.999	0.999	0.998	0.998	0.997	0.996
10	0.995	0.994	0.993	0.992	0.991	0.989	0.988	0.986	0.985	0.983
20	0.981	0.979	0.977	0.976	0.974	0.972	0.970	0.968	0.966	0.964
30	0.963	0.961	0.959	0.957	0.955	0.952	0.950	0.948	0.946	0.944
40	0.941	0.939	0.937	0.934	0.932	0.929	0.927	0.924	0.921	0.919
50	0.916	0.913	0.910	0.907	0.904	0.900	0.897	0.894	0.890	0.886
60	0.883	0.879	0.875	0.871	0.867	0.863	0.858	0.854	0.849	0.844
70	0.839	0.834	0.829	0.824	0.818	0.813	0.807	0.801	0.795	0.789
80	0.783	0.776	0.770	0.763	0.757	0.750	0.743	0.736	0.728	0.721
90	0.714	0.706	0.699	0.691	0.684	0.676	0.668	0.661	0.653	0.645
100	0.638	0.630	0.622	0.615	0.607	0.600	0.592	0.585	0.577	0.570
110	0.563	0.555	0.548	0.541	0.534	0.527	0.520	0.514	0.507	0.500
120	0.494	0.488	0.481	0.475	0.469	0.463	0.457	0.451	0.445	0.440
130	0.434	0.429	0.423	0.418	0.412	0.407	0.402	0.397	0.392	0.387
140	0.383	0.378	0.373	0.369	0.364	0.360	0.356	0.351	0.347	0.343
150	0.339	0.335	0.331	0.327	0.323	0.320	0.316	0.312	0.309	0.305
160	0.302	0.298	0.295	0.292	0.289	0.285	0.282	0.279	0.276	0.273
170	0.270	0.267	0.264	0.262	0.259	0.256	0.253	0.251	0.248	0.246
180	0.243	0.241	0.238	0.236	0.233	0.231	0.229	0.226	0.224	0.222
190	0.220	0.218	0.215	0.213	0.211	0.209	0.207	0.205	0.203	0.201
200	0.199	0.198	0.196	0.194	0.192	0.190	0.189	0.187	0.185	0.183
210	0.182	0.180	0.179	0.177	0.175	0.174	0.172	0.171	0.169	0.168
220	0.166	0.165	0.164	0.162	0.161	0.159	0.158	0.157	0.155	0.154
230	0.153	0.152	0.150	0.149	0.148	0.147	0.146	0.144	0.143	0.142
240	0.141	0.140	0.139	0.138	0.136	0.135	0.134	0.133	0.132	0.131
250	0.130									

Note: See Note of Table C-4.

Table C-2 Stability factor φ, of axial compression members, for Class b sections

$\lambda\sqrt{\frac{f_y}{235}}$	0	1	2	3	4	5	6	7	8	9
0	1.000	1.000	1.000	0.999	0.999	0.998	0.997	0.996	0.995	0.994
10	0.992	0.991	0.989	0.987	0.985	0.983	0.981	0.978	0.976	0.973
20	0.970	0.967	0.963	0.960	0.957	0.953	0.950	0.946	0.943	0.939
30	0.936	0.932	0.929	0.925	0.922	0.918	0.914	0.910	0.906	0.903
40	0.899	0.895	0.891	0.887	0.882	0.878	0.874	0.870	0.865	0.861
50	0.856	0.852	0.847	0.842	0.838	0.833	0.828	0.823	0.818	0.813
60	0.807	0.802	0.797	0.791	0.786	0.780	0.774	0.769	0.763	0.757
70	0.751	0.745	0.739	0.732	0.726	0.720	0.714	0.707	0.701	0.694
80	0.688	0.681	0.675	0.668	0.661	0.655	0.648	0.641	0.635	0.628
90	0.621	0.614	0.608	0.601	0.594	0.588	0.581	0.575	0.568	0.561
100	0.555	0.549	0.542	0.536	0.529	0.523	0.517	0.511	0.605	0.499
110	0.493	0.487	0.481	0.475	0.470	0.464	0.458	0.453	0.447	0.442
120	0.437	0.432	0.426	0.421	0.416	0.411	0.406	0.402	0.397	0.392
130	0.387	0.383	0.378	0.374	0.370	0.365	0.361	0.357	0.353	0.349
140	0.345	0.341	0.337	0.333	0.329	0.326	0.322	0.318	0.315	0.311
150	0.308	0.304	0.301	0.298	0.295	0.291	0.288	0.285	0.282	0.279
160	0.276	0.273	0.270	0.267	0.265	0.262	0.259	0.256	0.254	0.251
170	0.249	0.246	0.244	0.241	0.239	0.236	0.234	0.232	0.229	0.227
180	0.225	0.223	0.220	0.218	0.216	0.214	0.212	0.210	0.208	0.206
190	0.204	0.202	0.200	0.198	0.197	0.195	0.193	0.191	0.190	0.188
200	0.186	0.184	0.183	0.181	0.180	0.178	0.176	0.175	0.173	0.172
210	0.170	0.169	0.167	0.166	0.165	0.163	0.162	0.160	0.159	0.158
220	0.156	0.155	0.154	0.153	0.151	0.150	0.149	0.148	0.146	0.145
230	0.144	0.143	0.142	0.141	0.140	0.138	0.137	0.136	0.135	0.134
240	0.133	0.132	0.131	0.130	0.129	0.128	0.127	0.126	0.125	0.124
250	0.123									

Note: See Note of Table C-4.

Table C-3 Stability factor φ, of axial compression members, for Class c sections

$\lambda\sqrt{\frac{f_y}{235}}$	0	1	2	3	4	5	6	7	8	9
0	1.000	1.000	1.000	0.999	0.999	0.998	0.997	0.996	0.995	0.993
10	0.992	0.990	0.988	0.986	0.983	0.981	0.978	0.976	0.973	0.970
20	0.966	0.959	0.953	0.947	0.940	0.934	0.928	0.921	0.915	0.909
30	0.902	0.896	0.890	0.884	0.877	0.871	0.865	0.858	0.852	0.846
40	0.839	0.833	0.826	0.820	0.814	0.807	0.801	0.794	0.788	0.781
50	0.775	0.768	0.762	0.755	0.748	0.742	0.735	0.729	0.722	0.715
60	0.709	0.702	0.695	0.689	0.682	0.676	0.669	0.662	0.656	0.649
70	0.643	0.636	0.629	0.623	0.616	0.610	0.604	0.597	0.591	0.584
80	0.578	0.572	0.566	0.559	0.553	0.547	0.541	0.535	0.529	0.523
90	0.517	0.511	0.505	0.500	0.494	0.488	0.483	0.477	0.472	0.467
100	0.463	0.458	0.454	0.449	0.445	0.441	0.436	0.432	0.428	0.423
110	0.419	0.415	0.411	0.407	0.403	0.399	0.395	0.391	0.387	0.383
120	0.379	0.375	0.371	0.367	0.364	0.360	0.356	0.353	0.349	0.346
130	0.342	0.339	0.335	0.332	0.328	0.325	0.322	0.319	0.315	0.312
140	0.309	0.306	0.303	0.300	0.297	0.294	0.291	0.288	0.285	0.282
150	0.280	0.277	0.274	0.271	0.269	0.266	0.264	0.261	0.258	0.256
160	0.254	0.251	0.249	0.246	0.244	0.242	0.239	0.237	0.235	0.233
170	0.230	0.228	0.226	0.224	0.222	0.220	0.218	0.216	0.214	0.212
180	0.210	0.208	0.206	0.205	0.203	0.201	0.199	0.197	0.196	0.194
190	0.192	0.190	0.189	0.187	0.186	0.184	0.182	0.181	0.179	0.178
200	0.176	0.175	0.173	0.172	0.170	0.169	0.168	0.166	0.165	0.163
210	0.162	0.161	0.159	0.158	0.157	0.156	0.154	0.153	0.152	0.151
220	0.150	0.148	0.147	0.146	0.145	0.144	0.143	0.142	0.140	0.139
230	0.138	0.137	0.136	0.135	0.134	0.133	0.132	0.131	0.130	0.129
240	0.128	0.127	0.126	0.125	0.124	0.124	0.123	0.122	0.121	0.120
250	0.119									

Note: See Note of Table C-4.

Table C-4 Stability factor φ, of axial compression members, for Class d sections

$\lambda\sqrt{\frac{f_y}{235}}$	0	1	2	3	4	5	6	7	8	9
0	1.000	1.000	0.999	0.999	0.998	0.996	0.994	0.992	0.990	0.987
10	0.984	0.981	0.978	0.974	0.969	0.965	0.960	0.955	0.949	0.944
20	0.937	0.927	0.918	0.909	0.900	0.891	0.883	0.874	0.865	0.857
30	0.878	0.840	0.831	0.823	0.815	0.807	0.799	0.790	0.782	0.774
40	0.766	0.759	0.751	0.743	0.735	0.728	0.720	0.712	0.705	0.697
50	0.690	0.683	0.675	0.668	0.661	0.654	0.646	0.639	0.632	0.625
60	0.618	0.612	0.605	0.598	0.591	0.585	0.578	0.572	0.565	0.559
70	0.552	0.546	0.540	0.534	0.528	0.522	0.516	0.510	0.504	0.498
80	0.493	0.487	0.481	0.476	0.470	0.465	0.460	0.454	0.449	0.444
90	0.439	0.434	0.429	0.424	0.419	0.414	0.410	0.405	0.401	0.397
100	0.394	0.390	0.387	0.383	0.380	0.376	0.373	0.370	0.366	0.363
110	0.359	0.356	0.353	0.350	0.346	0.343	0.340	0.337	0.334	0.331
120	0.328	0.325	0.322	0.319	0.316	0.313	0.310	0.307	0.304	0.301
130	0.299	0.296	0.293	0.290	0.288	0.285	0.282	0.280	0.277	0.275
140	0.272	0.270	0.267	0.265	0.262	0.260	0.258	0.255	0.253	0.251
150	0.248	0.246	0.244	0.242	0.240	0.237	0.235	0.233	0.231	0.229
160	0.227	0.225	0.223	0.221	0.219	0.217	0.215	0.213	0.212	0.210
170	0.208	0.206	0.204	0.203	0.201	0.199	0.197	0.196	0.194	0.192
180	0.191	0.189	0.188	0.186	0.184	0.183	0.181	0.180	0.178	0.177
190	0.176	0.174	0.173	0.171	0.170	0.168	0.167	0.166	0.164	0.163
200	0.162									

Note: 1 Values of φ in Tables C-1 through C-4 are calculated from the following formulae:

$$\varphi = 1 - \alpha_1 \lambda_n^2 \quad \text{for } \lambda_n = \frac{\lambda}{\pi}\sqrt{\frac{f_y}{E}} \leqslant 0.215$$

$$\varphi = \frac{1}{2\lambda_n^2}\left[(\alpha_2 + \alpha_3\lambda_n + \lambda_n^2) - \sqrt{(\alpha_2 + \alpha_3\lambda_n + \lambda_n^2)^2 - 4\lambda_n^2}\right] \quad \text{for } \lambda_n > 0.215$$

where α_1, α_2, α_3——coefficients, taken from Table C-5 in accordance with the cross-section classification of Table 5.1.2 of this Code.

2 In case $\lambda\sqrt{f_y/235}$ of a member exceeds the entry of Tables C-1 through C-4, calculate φ value according to formulae given in Note 1.

Table C-5 Coefficients α_1, α_2, α_3

Class of sections		α_1	α_2	α_3
a		0.41	0.986	0.152
b		0.65	0.965	0.300
c	$\lambda_n \leqslant 1.05$	0.73	0.906	0.595
	$\lambda_n > 1.05$		1.216	0.302
d	$\lambda_n \leqslant 1.05$	1.35	0.868	0.915
	$\lambda_n > 1.05$		1.375	0.432

Appendix D Effective length factor for columns

Table D-1 Column effective length factor μ for frames without sidesway

K_2 \ K_1	0	0.05	0.1	0.2	0.3	0.4	0.5	1	2	3	4	5	≥10
0	1.000	0.990	0.981	0.964	0.949	0.935	0.922	0.875	0.820	0.791	0.773	0.760	0.732
0.05	0.990	0.981	0.971	0.955	0.940	0.926	0.914	0.867	0.814	0.784	0.766	0.754	0.726
0.1	0.981	0.971	0.962	0.946	0.931	0.918	0.906	0.860	0.807	0.778	0.760	0.748	0.721
0.2	0.964	0.955	0.946	0.930	0.916	0.903	0.891	0.846	0.795	0.767	0.749	0.737	0.711
0.3	0.949	0.940	0.931	0.916	0.902	0.889	0.878	0.834	0.784	0.756	0.739	0.728	0.701
0.4	0.935	0.926	0.918	0.903	0.889	0.877	0.866	0.823	0.774	0.747	0.730	0.719	0.693
0.5	0.922	0.914	0.906	0.891	0.878	0.866	0.855	0.813	0.765	0.738	0.721	0.710	0.685
1	0.875	0.867	0.860	0.846	0.834	0.823	0.813	0.774	0.729	0.704	0.688	0.677	0.654
2	0.820	0.814	0.807	0.795	0.784	0.774	0.765	0.729	0.686	0.663	0.648	0.638	0.615
3	0.791	0.784	0.778	0.767	0.756	0.747	0.738	0.704	0.663	0.640	0.625	0.616	0.593
4	0.773	0.766	0.760	0.749	0.739	0.730	0.721	0.688	0.648	0.625	0.611	0.601	0.580
5	0.760	0.754	0.748	0.737	0.728	0.719	0.710	0.677	0.638	0.616	0.601	0.592	0.570
≥10	0.732	0.726	0.721	0.711	0.701	0.693	0.685	0.654	0.615	0.593	0.580	0.570	0.549

Note: 1 Values of factor μ in this Table are calculated from the following equation

$$\left[\left(\frac{\pi}{\mu}\right)^2 + 2(K_1 + K_2) - 4K_1K_2\right]\frac{\pi}{\mu}\cdot\sin\frac{\pi}{\mu} - 2\left[(K_1 + K_2)\left(\frac{\pi}{\mu}\right)^2 + 4K_1K_2\right]\cos\frac{\pi}{\mu} + 8K_1K_2 = 0$$

where K_1, K_2——ratio of the sum of girder linear stiffness to that of column linear stiffness at the top and bottom of the calculated column respectively. In case the far end of a girder is hinged, its linear stiffness shall be multiplied by 1.5 while for a far end fixed girder, its linear stiffness shall be multiplied by 2.

2 The linear stiffness of a girder hinge-connected to the column is taken as zero.

3 For columns of the bottom story: take $K_2 = 0$ for columns hinged to the foundation ($K_2 = 0.1$ may be used for base plate support); take $K_2 = 10$ for columns rigidly fixed to the foundation.

4 In case a girder rigidly connected to the column is subject to large axial compression N_b, its linear stiffness shall be multiplied by a reduction factor α_N as follows:

For girders with far end rigidly connected to column, and also those with far end hinged

$$\alpha_N = 1 - N_b/N_{Eb}$$

For girders with far end fixed

$$\alpha_N = 1 - N_b/(2N_{Eb})$$

where $N_{Eb} = \pi^2 EI_b/l^2$, I_b is the moment of inertia of the girder section and l is girder length.

Table D-2 Column effective length factor μ for frames with sideway

K_2 \ K_1	0	0.05	0.1	0.2	0.3	0.4	0.5	1	2	3	4	5	≥10
0	∞	6.02	4.46	3.42	3.01	2.78	2.64	2.33	2.17	2.11	2.08	2.07	2.03
0.05	6.02	4.16	3.47	2.86	2.58	2.42	2.31	2.07	1.94	1.90	1.87	1.86	1.83
0.1	4.46	3.47	3.01	2.56	2.33	2.20	2.11	1.90	1.79	1.75	1.73	1.72	1.70
0.2	3.42	2.86	2.56	2.23	2.05	1.94	1.87	1.70	1.60	1.57	1.55	1.54	1.52
0.3	3.01	2.58	2.33	2.05	1.90	1.80	1.74	1.58	1.49	1.46	1.45	1.44	1.42
0.4	2.78	2.42	2.20	1.94	1.80	1.71	1.65	1.50	1.42	1.39	1.37	1.37	1.35
0.5	2.64	2.31	2.11	1.87	1.74	1.65	1.59	1.45	1.37	1.34	1.32	1.32	1.30
1	2.33	2.07	1.90	1.70	1.58	1.50	1.45	1.32	1.24	1.21	1.20	1.19	1.17
2	2.17	1.94	1.79	1.60	1.49	1.42	1.37	1.24	1.16	1.14	1.12	1.12	1.10
3	2.11	1.90	1.75	1.57	1.46	1.39	1.34	1.21	1.14	1.11	1.10	1.09	1.07
4	2.08	1.87	1.73	1.55	1.45	1.37	1.32	1.20	1.12	1.10	1.08	1.08	1.06
5	2.07	1.86	1.72	1.54	1.44	1.37	1.32	1.19	1.12	1.09	1.08	1.07	1.05
≥10	2.03	1.83	1.70	1.52	1.42	1.35	1.30	1.17	1.10	1.07	1.06	1.05	1.03

Note: 1 Values of factor μ in this Table are calculated from the following equation

$$\left[36K_1K_2 - \left(\frac{\pi}{\mu}\right)^2\right]\sin\frac{\pi}{\mu} + 6(K_1 + K_2)\frac{\pi}{\mu}\cdot\cos\frac{\pi}{\mu} = 0$$

where K_1, K_2——ratio of the sum of girder linear stiffness to that of column linear stiffness at the top and bottom of the calculated column respectively. In case the far end of a girder is hinged, its linear stiffness shall be multiplied by 0.5 while for a far end fixed girder, its linear stiffness shall be multiplied by 2/3.

2 The linear stiffness of a girder hinge-connected to the column is taken as zero.

3 For columns of the bottom story: take $K_2=0$ for columns hinged to the foundation ($K_2=0.1$ may be used for base plate support); take $K_2=10$ for columns rigidly fixed to the foundation.

4 In case a girder rigidly connected to the column is subject to large axial compression N_b, its linear stiffness shall be multiplied by a reduction factor α_N as follows:

For girders with far end rigidly connected to column:

$$\alpha_N = 1 - N_b/(4N_{Eb})$$

For girders with far end hinged:

$$\alpha_N = 1 - N_b/N_{Eb}$$

For girders with far end fixed:

$$\alpha_N = 1 - N_b/(2N_{Eb})$$

See Note 4 of Table D-1 for calculation of N_{Eb}.

Table D-3 Effective length factor μ_2 for the lower portion of single-stepped columns with free upper end

Scheme	K_1 / η_1	0.06	0.08	0.10	0.12	0.14	0.16	0.18	0.20	0.22	0.24	0.26	0.28	0.3	0.4	0.5	0.6	0.7	0.8
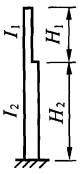	0.2	2.00	2.01	2.01	2.01	2.01	2.01	2.01	2.02	2.02	2.02	2.02	2.02	2.02	2.03	2.04	2.05	2.06	2.07
	0.3	2.01	2.02	2.02	2.02	2.03	2.03	2.03	2.04	2.04	2.05	2.05	2.05	2.06	2.08	2.10	2.12	2.13	2.15
	0.4	2.02	2.03	2.04	2.04	2.05	2.06	2.07	2.07	2.08	2.09	2.09	2.10	2.11	2.14	2.18	2.21	2.25	2.28
	0.5	2.04	2.05	2.06	2.07	2.09	2.10	2.11	2.12	2.13	2.15	2.16	2.17	2.18	2.24	2.29	2.35	2.40	2.45
	0.6	2.06	2.08	2.10	2.12	2.14	2.16	2.18	2.19	2.21	2.23	2.25	2.26	2.28	2.36	2.44	2.52	2.59	2.66
	0.7	2.10	2.13	2.16	2.18	2.21	2.24	2.26	2.29	2.31	2.34	2.36	2.38	2.41	2.52	2.62	2.72	2.81	2.90
	0.8	2.15	2.20	2.24	2.27	2.31	2.34	2.38	2.41	2.44	2.47	2.50	2.53	2.56	2.70	2.82	2.94	3.06	3.16
	0.9	2.24	2.29	2.35	2.39	2.44	2.48	2.52	2.56	2.60	2.63	2.67	2.71	2.74	2.90	3.05	3.19	3.32	3.44
$K_1 = \frac{I_1}{I_2} \cdot \frac{H_2}{H_1}$	1.0	2.36	2.43	2.48	2.54	2.59	2.64	2.69	2.73	2.77	2.82	2.86	2.90	2.94	3.12	3.29	3.45	3.59	3.74
	1.2	2.69	2.76	2.83	2.89	2.95	3.01	3.07	3.12	3.17	3.22	3.27	3.32	3.37	3.59	3.80	3.99	4.17	4.34
$\eta_1 = \frac{H_1}{H_2}\sqrt{\frac{N_1}{N_2} \cdot \frac{I_2}{I_1}}$	1.4	3.07	3.14	3.22	3.29	3.36	3.42	3.48	3.55	3.61	3.66	3.72	3.78	3.83	4.09	4.33	4.56	4.77	4.97
	1.6	3.47	3.55	3.63	3.71	3.78	3.85	3.92	3.99	4.07	4.12	4.18	4.25	4.31	4.61	4.88	5.14	5.38	5.62
	1.8	3.88	3.97	4.05	4.13	4.21	4.29	4.37	4.44	4.52	4.59	4.66	4.73	4.80	5.13	5.44	5.73	6.00	6.26
N_1, N_2: axial	2.0	4.29	4.39	4.48	4.57	4.65	4.74	4.82	4.90	4.99	5.07	5.14	5.22	5.30	5.66	6.00	6.32	6.63	6.92
forces of upper	2.2	4.71	4.81	4.91	5.00	5.10	5.19	5.28	5.37	5.46	5.54	5.63	5.71	5.80	6.19	6.57	6.92	7.26	7.58
and lower portions	2.4	5.13	5.24	5.34	5.44	5.54	5.64	5.74	5.84	5.93	6.03	6.12	6.21	6.30	6.73	7.14	7.52	7.89	8.24
respectively	2.6	5.55	5.66	5.77	5.88	5.99	6.10	6.20	6.31	6.41	6.51	6.61	6.71	6.80	7.27	7.71	8.13	8.52	8.90
	2.8	5.97	6.09	6.21	6.33	6.44	6.55	6.67	6.78	6.89	6.99	7.10	7.21	7.31	7.81	8.28	8.73	9.16	9.57
	3.0	6.39	6.52	6.64	6.77	6.89	7.01	7.13	7.25	7.37	7.48	7.59	7.71	7.82	8.35	8.86	9.34	9.80	10.24

Note: Values of factor μ_2 in this Table are calculated from the following equation:

$$\eta_1 K_1 \cdot \operatorname{tg}\frac{\pi}{\mu_2} \cdot \operatorname{tg}\frac{\pi\eta_1}{\mu_2} - 1 = 0$$

Table D-4 Effective length factor μ_2 for the lower portion of single-stepped columns with translation-free and rotation-fixed upper end

Scheme	K_1 / η_1	0.06	0.08	0.10	0.12	0.14	0.16	0.18	0.20	0.22	0.24	0.26	0.28	0.3	0.4	0.5	0.6	0.7	0.8
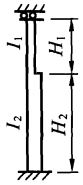	0.2	1.96	1.94	1.93	1.91	1.90	1.89	1.88	1.86	1.85	1.84	1.83	1.82	1.81	1.76	1.72	1.68	1.65	1.62
	0.3	1.96	1.94	1.93	1.92	1.91	1.89	1.88	1.87	1.86	1.85	1.84	1.83	1.82	1.77	1.73	1.70	1.66	1.63
	0.4	1.96	1.95	1.94	1.92	1.91	1.90	1.89	1.88	1.87	1.86	1.85	1.84	1.83	1.79	1.75	1.72	1.68	1.66
	0.5	1.96	1.95	1.94	1.93	1.92	1.91	1.90	1.89	1.88	1.87	1.86	1.85	1.85	1.81	1.77	1.74	1.71	1.69
	0.6	1.97	1.96	1.95	1.94	1.93	1.92	1.91	1.90	1.90	1.89	1.88	1.87	1.87	1.83	1.80	1.78	1.75	1.73
	0.7	1.97	1.97	1.96	1.95	1.94	1.94	1.93	1.92	1.92	1.91	1.90	1.90	1.89	1.86	1.84	1.82	1.80	1.78
	0.8	1.98	1.98	1.97	1.96	1.96	1.95	1.95	1.94	1.94	1.93	1.93	1.93	1.92	1.90	1.88	1.87	1.86	1.84
	0.9	1.99	1.99	1.98	1.98	1.98	1.97	1.97	1.97	1.97	1.96	1.96	1.96	1.96	1.95	1.94	1.93	1.92	1.92
	1.0	2.00	2.00	2.00	2.00	2.00	2.00	2.00	2.00	2.00	2.00	2.00	2.00	2.00	2.00	2.00	2.00	2.00	2.00
$K_1 = \frac{I_1}{I_2} \cdot \frac{H_2}{H_1}$	1.2	2.03	2.04	2.04	2.05	2.06	2.07	2.07	2.08	2.08	2.09	2.10	2.10	2.11	2.13	2.15	2.17	2.18	2.20
	1.4	2.07	2.09	2.11	2.12	2.14	2.16	2.17	2.18	2.20	2.21	2.22	2.23	2.24	2.29	2.33	2.37	2.40	2.42
$\eta_1 = \frac{H_1}{H_2}\sqrt{\frac{N_1}{N_2} \cdot \frac{I_2}{I_1}}$	1.6	2.13	2.16	2.19	2.22	2.25	2.27	2.30	2.32	2.34	2.36	2.37	2.39	2.41	2.48	2.54	2.59	2.63	2.67
	1.8	2.22	2.27	2.31	2.35	2.39	2.42	2.45	2.48	2.50	2.53	2.55	2.57	2.59	2.69	2.76	2.83	2.88	2.93
N_1, N_2: axial	2.0	2.35	2.41	2.46	2.50	2.55	2.59	2.62	2.66	2.69	2.72	2.75	2.77	2.80	2.91	3.00	3.08	3.14	3.20
forces of upper	2.2	2.51	2.57	2.63	2.68	2.73	2.77	2.81	2.85	2.89	2.92	2.95	2.98	3.01	3.14	3.25	3.33	3.41	3.47
and lower portions	2.4	2.68	2.75	2.81	2.87	2.92	2.97	3.01	3.05	3.09	3.13	3.17	3.20	3.24	3.38	3.50	3.59	3.68	3.75
respectively	2.6	2.87	2.94	3.00	3.06	3.12	3.17	3.22	3.27	3.31	3.35	3.39	3.43	3.46	3.62	3.75	3.86	3.95	4.03
	2.8	3.06	3.14	3.20	3.27	3.33	3.38	3.43	3.48	3.53	3.58	3.62	3.66	3.70	3.87	4.01	4.13	4.23	4.32
	3.0	3.26	3.34	3.41	3.47	3.54	3.60	3.65	3.70	3.75	3.80	3.85	3.89	3.93	4.12	4.27	4.40	4.51	4.61

Note: Values of factor μ_2 in this Table are calculated from the following equation:

$$\operatorname{tg}\frac{\pi\eta_1}{\mu_2} + \eta_1 K_1 \cdot \operatorname{tg}\frac{\pi}{\mu_2} = 0$$

Table D-5 Effective length factor μ_3 for the lower portion of double-stepped columns with free upper end

Scheme	K_1 / K_2 / η_1 / η_2		0.05										
			0.2	0.3	0.4	0.5	0.6	0.7	0.8	0.9	1.0	1.1	1.2
	0.2	0.2	2.02	2.03	2.04	2.05	2.05	2.06	2.07	2.08	2.09	2.10	2.10
		0.4	2.08	2.11	2.15	2.19	2.22	2.25	2.29	2.32	2.35	2.39	2.42
		0.6	2.20	2.29	2.37	2.45	2.52	2.60	2.67	2.73	2.80	2.87	2.93
		0.8	2.42	2.57	2.71	2.83	2.95	3.06	3.17	3.27	3.37	3.47	3.56
		1.0	2.75	2.95	3.13	3.30	3.45	3.60	3.74	3.87	4.00	4.13	4.25
		1.2	3.13	3.38	3.60	3.80	4.00	4.18	4.35	4.51	4.67	4.82	4.97
	0.4	0.2	2.04	2.05	2.05	2.06	2.07	2.08	2.09	2.09	2.10	2.11	2.12
		0.4	2.10	2.14	2.17	2.20	2.24	2.27	2.31	2.34	2.37	2.40	2.43
		0.6	2.24	2.32	2.40	2.47	2.54	2.62	2.68	2.75	2.82	2.88	2.94
		0.8	2.47	2.60	2.73	2.85	2.97	3.08	3.19	3.29	3.38	3.48	3.57
		1.0	2.79	2.98	3.15	3.32	3.47	3.62	3.75	3.89	4.02	4.14	4.26
		1.2	3.18	3.41	3.62	3.82	4.01	4.19	4.36	4.52	4.68	4.83	4.98
	0.6	0.2	2.09	2.09	2.10	2.10	2.11	2.12	2.12	2.13	2.14	2.15	2.15
		0.4	2.17	2.19	2.22	2.25	2.28	2.31	2.34	2.38	2.41	2.44	2.47
		0.6	2.32	2.38	2.45	2.52	2.59	2.66	2.72	2.79	2.85	2.91	2.97
		0.8	2.56	2.67	2.79	2.90	3.01	3.11	3.22	3.32	3.41	3.50	3.60
		1.0	2.88	3.04	3.20	3.36	3.50	3.65	3.78	3.91	4.04	4.16	4.26
		1.2	3.26	3.46	3.66	3.86	4.04	4.22	4.38	4.55	4.70	4.85	5.00
	0.8	0.2	2.29	2.24	2.22	2.21	2.21	2.22	2.22	2.22	2.23	2.23	2.24
		0.4	2.37	2.34	2.34	2.36	2.38	2.40	2.43	2.45	2.48	2.51	2.54
		0.6	2.52	2.52	2.56	2.61	2.67	2.73	2.79	2.85	2.91	2.96	3.02
		0.8	2.74	2.79	2.88	2.98	3.08	3.17	3.27	3.36	3.46	3.55	3.63
		1.0	3.04	3.15	3.28	3.42	3.56	3.69	3.82	3.95	4.07	4.19	4.31
		1.2	3.39	3.55	3.73	3.91	4.08	4.25	4.42	4.58	4.73	4.88	5.02
	1.0	0.2	2.69	2.57	2.51	2.48	2.46	2.45	2.45	2.44	2.44	2.44	2.44
		0.4	2.75	2.64	2.60	2.59	2.59	2.59	2.60	2.62	2.63	2.65	2.67
		0.6	2.86	2.78	2.77	2.79	2.83	2.87	2.91	2.96	3.01	3.06	3.10
		0.8	3.04	3.01	3.05	3.11	3.19	3.27	3.35	3.44	3.52	3.61	3.69
		1.0	3.29	3.32	3.41	3.52	3.64	3.76	3.89	4.01	4.13	4.24	4.35
		1.2	3.60	3.69	3.83	3.99	4.15	4.31	4.47	4.62	4.77	4.92	5.06
	1.2	0.2	3.16	3.00	2.92	2.87	2.84	2.81	2.80	2.79	2.78	2.77	2.77
		0.4	3.21	3.05	2.98	2.94	2.92	2.90	2.90	2.90	2.90	2.91	2.92
		0.6	3.30	3.15	3.10	3.08	3.08	3.10	3.12	3.15	3.18	3.22	3.26
		0.8	3.43	3.32	3.30	3.33	3.37	3.43	3.49	3.56	3.63	3.71	3.78
		1.0	3.62	3.57	3.60	3.68	3.77	3.87	3.98	4.09	4.20	4.31	4.42
		1.2	3.88	3.88	3.98	4.11	4.25	4.39	4.54	4.68	4.83	4.97	5.10
	1.4	0.2	3.66	3.46	3.36	3.29	3.25	3.23	3.20	3.19	3.18	3.17	3.16
		0.4	3.70	3.50	3.40	3.35	3.31	3.29	3.27	3.26	3.26	3.26	3.26
		0.6	3.77	3.58	3.49	3.45	3.43	3.42	3.42	3.43	3.45	3.47	3.49
		0.8	3.87	3.70	3.64	3.63	3.64	3.67	3.70	3.75	3.81	3.86	3.92
		1.0	4.02	3.89	3.87	3.90	3.96	4.04	4.12	4.22	4.31	4.41	4.51
		1.2	4.23	4.15	4.19	4.27	4.39	4.51	4.64	4.77	4.91	5.04	5.17



$$K_1 = \frac{I_1}{I_3} \cdot \frac{H_3}{H_1}$$

$$K_2 = \frac{I_2}{I_3} \cdot \frac{H_3}{H_2}$$

$$\eta_1 = \frac{H_1}{H_3}\sqrt{\frac{N_1}{N_3} \cdot \frac{I_3}{I_1}}$$

$$\eta_2 = \frac{H_2}{H_3}\sqrt{\frac{N_2}{N_3} \cdot \frac{I_3}{I_2}}$$

N_1, N_2, N_3: axial forces of upper, middle and lower portions respectively

Table D-5 (Continued)

Scheme	K_1 / K_2 / η_1 / η_2		0.10										
			0.2	0.3	0.4	0.5	0.6	0.7	0.8	0.9	1.0	1.1	1.2
	0.2	0.2	2.03	2.03	2.04	2.05	2.06	2.07	2.08	2.08	2.09	2.10	2.11
		0.4	2.09	2.12	2.16	2.19	2.23	2.26	2.29	2.33	2.36	2.39	2.42
		0.6	2.21	2.30	2.38	2.46	2.53	2.60	2.67	2.74	2.81	2.87	2.93
		0.8	2.44	2.58	2.71	2.84	2.96	3.07	3.17	3.28	3.37	3.47	3.56
		1.0	2.76	2.96	3.14	3.30	3.46	3.60	3.74	3.88	4.01	4.13	4.25
		1.2	3.15	3.39	3.61	3.81	4.00	4.18	4.35	4.52	4.68	4.83	4.98
	0.4	0.2	2.07	2.07	2.08	2.08	2.09	2.10	2.11	2.12	2.12	2.13	2.14
		0.4	2.14	2.17	2.20	2.23	2.26	2.30	2.33	2.36	2.39	4.42	2.46
		0.6	2.28	2.36	2.43	2.50	2.57	2.64	2.71	2.77	2.84	2.90	2.96
		0.8	2.53	2.65	2.77	2.88	3.00	3.10	3.21	3.31	3.40	3.50	3.59
		1.0	2.85	3.02	3.19	3.34	3.49	3.64	3.77	3.91	4.03	4.16	4.28
		1.2	3.24	3.45	3.65	3.85	4.03	4.21	4.38	4.54	4.70	4.85	4.99
	0.6	0.2	2.22	2.19	2.18	2.17	2.18	2.18	2.19	2.19	2.20	2.20	2.21
		0.4	2.31	2.30	2.31	2.33	2.35	2.38	2.41	2.44	2.47	2.49	2.52
		0.6	2.48	2.49	2.54	2.60	2.66	2.72	2.78	2.84	2.90	2.96	3.02
		0.8	2.72	2.78	2.87	2.97	3.07	3.17	3.27	3.36	3.46	3.55	3.64
		1.0	3.04	3.15	3.28	3.42	3.56	3.70	3.83	3.95	4.08	4.20	4.31
		1.2	3.40	3.56	3.74	3.91	4.09	4.26	4.42	4.58	4.73	4.88	5.03
	0.8	0.2	2.63	2.49	2.43	2.40	2.38	2.37	2.37	2.36	2.36	2.37	2.37
		0.4	2.71	2.59	2.53	2.55	2.54	2.55	2.57	2.59	2.61	2.63	2.65
		0.6	2.86	2.76	2.76	2.78	2.82	2.86	2.91	2.96	3.01	3.07	3.12
		0.8	3.06	3.02	3.06	3.13	3.20	3.29	3.37	3.46	3.54	3.63	3.71
		1.0	3.33	3.35	3.44	3.55	3.67	3.79	3.90	4.03	4.15	4.26	4.37
		1.2	3.65	3.73	3.86	4.02	4.18	4.34	4.49	4.64	4.79	4.94	5.08
	1.0	0.2	3.18	2.95	2.84	2.77	2.73	2.70	2.68	2.67	2.66	2.65	2.65
		0.4	3.24	3.03	2.93	2.88	2.85	2.84	2.84	2.84	2.85	2.86	2.87
		0.6	3.36	3.16	3.09	3.07	3.08	3.09	3.12	3.15	3.19	3.23	3.27
		0.8	3.52	3.37	3.34	3.36	3.41	3.46	3.53	3.60	3.67	3.75	3.82
		1.0	3.74	3.64	3.67	3.74	3.83	3.93	4.03	4.14	4.25	4.35	4.46
		1.2	4.00	3.97	4.05	4.17	4.31	4.45	4.59	4.73	4.87	5.01	5.14
	1.2	0.2	3.77	3.47	3.32	3.23	3.17	3.12	3.09	3.07	3.05	3.04	3.03
		0.4	3.82	3.53	3.39	3.31	3.26	3.22	3.20	3.19	3.19	3.19	3.19
		0.6	3.91	3.64	3.51	3.45	3.42	3.42	3.42	3.43	3.45	3.48	3.50
		0.8	4.04	3.80	3.71	3.68	3.69	3.72	3.76	3.81	3.86	3.92	3.98
		1.0	4.21	4.02	3.97	3.99	4.05	4.12	4.20	4.29	4.39	4.48	4.58
		1.2	4.43	4.30	4.31	4.38	4.48	4.60	4.72	4.85	4.98	5.11	5.24
	1.4	0.2	4.37	4.01	3.82	3.71	3.63	3.58	3.54	3.51	3.49	3.47	3.45
		0.4	4.41	4.06	3.88	3.77	3.70	3.66	3.63	3.60	3.59	3.58	3.57
		0.6	4.48	4.15	3.98	3.89	3.83	3.80	3.79	3.78	3.79	3.80	3.81
		0.8	4.59	4.28	4.13	4.07	4.04	4.04	4.06	4.08	4.12	4.16	4.21
		1.0	4.74	4.45	4.35	4.32	4.34	4.38	4.43	4.50	4.58	4.66	4.74
		1.2	4.92	4.69	4.63	4.65	4.72	4.80	4.90	5.10	5.13	5.24	5.36



$$K_1 = \frac{I_1}{I_3} \cdot \frac{H_3}{H_1}$$

$$K_2 = \frac{I_2}{I_3} \cdot \frac{H_3}{H_2}$$

$$\eta_1 = \frac{H_1}{H_3}\sqrt{\frac{N_1}{N_3} \cdot \frac{I_3}{I_1}}$$

$$\eta_2 = \frac{H_2}{H_3}\sqrt{\frac{N_2}{N_3} \cdot \frac{I_3}{I_2}}$$

N_1, N_2, N_3: axial forces of upper, middle and lower portions respectively

Table D-5 (Continued)

Scheme	K_1 / K_2 / η_1 / η_2		K_1 = 0.20										
			0.2	0.3	0.4	0.5	0.6	0.7	0.8	0.9	1.0	1.1	1.2
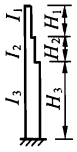	0.2	0.2	2.04	2.04	2.05	2.06	2.07	2.08	2.08	2.09	2.10	2.11	2.12
		0.4	2.10	2.13	2.17	2.20	2.24	2.27	2.30	2.34	2.37	2.40	2.43
		0.6	2.23	2.31	2.39	2.47	2.54	2.61	2.68	2.75	2.82	2.88	2.94
		0.8	2.46	2.60	2.73	2.85	2.97	3.08	3.18	3.29	3.38	3.48	3.57
		1.0	2.79	2.98	3.15	3.32	3.47	3.61	3.75	3.89	4.02	4.14	4.26
		1.2	3.18	3.41	3.62	3.82	4.01	4.19	4.36	4.52	4.68	4.83	4.98
	0.4	0.2	2.15	2.13	2.13	2.14	2.14	2.15	2.15	2.16	2.17	2.17	2.18
		0.4	2.24	2.24	2.26	2.29	2.32	2.35	2.38	2.41	2.44	2.47	2.50
		0.6	2.40	2.44	2.60	2.56	2.63	2.69	2.76	2.82	2.88	2.94	3.00
		0.8	2.66	2.74	2.84	2.95	3.05	3.15	3.25	3.35	3.44	3.53	3.62
		1.0	2.98	3.12	3.25	3.40	3.54	3.68	3.81	3.94	4.07	4.19	4.30
		1.2	3.35	3.53	3.71	3.90	4.08	4.25	4.41	4.57	4.73	4.87	5.02
	0.6	0.2	2.57	2.42	2.37	2.34	2.33	2.32	2.32	2.32	2.32	2.32	2.33
		0.4	2.67	2.54	2.50	2.50	2.51	2.52	2.54	2.56	2.58	2.61	2.63
		0.6	2.83	2.74	2.73	2.76	2.80	2.85	2.90	2.96	3.01	3.06	3.12
		0.8	3.06	3.01	3.05	3.12	3.20	3.29	3.38	3.46	3.55	3.63	3.72
		1.0	3.34	3.35	3.44	3.56	3.68	3.80	3.92	4.04	4.15	4.27	4.38
		1.2	3.67	3.74	3.88	4.03	4.19	4.35	4.50	4.65	4.80	4.94	5.08
	0.8	0.2	3.25	2.96	2.82	2.74	2.69	2.66	2.64	2.62	2.61	2.61	2.60
		0.4	3.33	3.05	2.93	2.87	2.84	2.83	2.83	2.83	2.84	2.85	2.87
		0.6	3.45	3.21	3.12	3.10	3.10	3.12	3.14	3.18	3.22	3.26	3.30
		0.8	3.63	3.44	3.39	3.41	3.45	3.51	3.57	3.64	3.71	3.79	3.86
		1.0	3.86	3.73	3.73	3.80	3.88	3.98	4.08	4.18	4.29	4.39	4.50
		1.2	4.13	4.07	4.13	4.24	4.36	4.50	4.64	4.78	4.91	5.05	5.18
	1.0	0.2	4.00	3.60	3.39	3.26	3.18	3.13	3.08	3.05	3.03	3.01	3.00
		0.4	4.06	3.67	3.48	3.37	3.30	3.26	3.23	3.21	3.21	3.20	3.20
		0.6	4.15	3.79	3.63	3.54	3.50	3.48	3.49	3.50	3.51	3.54	3.57
		0.8	4.29	3.97	3.84	3.80	3.79	3.81	3.85	3.90	3.95	4.01	4.07
		1.0	4.48	4.21	4.13	4.13	4.17	4.23	4.31	4.39	4.48	4.57	4.66
		1.2	4.70	4.49	4.47	4.52	4.60	4.71	4.82	4.94	5.07	5.19	5.31
	1.2	0.2	4.76	4.26	4.00	3.83	3.72	3.65	3.59	3.54	3.51	3.48	3.46
		0.4	4.81	4.32	4.07	3.91	3.82	3.75	3.70	3.67	3.65	3.63	3.62
		0.6	4.89	4.43	4.19	4.05	3.98	3.93	3.91	3.89	3.89	3.90	3.91
		0.8	5.00	4.57	4.36	4.26	4.21	4.20	4.21	4.23	4.26	4.30	4.34
		1.0	5.15	4.76	4.59	4.53	4.53	4.55	4.60	4.66	4.73	4.80	4.88
		1.2	5.34	5.00	4.88	4.87	4.91	4.98	5.07	5.17	5.27	5.38	5.49
	1.4	0.2	5.53	4.94	4.62	4.42	4.29	4.19	4.12	4.06	4.02	3.98	3.95
		0.4	5.57	4.99	4.68	4.49	4.36	4.27	4.21	4.16	4.13	4.10	4.08
		0.6	5.64	5.07	4.78	4.60	4.49	4.42	4.38	4.35	4.33	4.32	4.32
		0.8	5.74	5.19	4.92	4.77	4.69	4.64	4.62	4.62	4.63	4.65	4.67
		1.0	5.86	5.35	5.12	5.00	4.95	4.94	4.96	4.99	5.03	5.09	5.15
		1.2	6.02	5.55	5.36	5.29	5.28	5.31	5.37	5.44	5.52	5.61	5.71

$$K_1 = \frac{I_1}{I_3} \cdot \frac{H_3}{H_1}$$

$$K_2 = \frac{I_2}{I_3} \cdot \frac{H_3}{H_2}$$

$$\eta_1 = \frac{H_1}{H_3}\sqrt{\frac{N_1}{N_3} \cdot \frac{I_3}{I_1}}$$

$$\eta_2 = \frac{H_2}{H_3}\sqrt{\frac{N_2}{N_3} \cdot \frac{I_3}{I_2}}$$

N_1, N_2, N_3: axial forces of upper, middle and lower portions respectively

Table D-5 (Continued)

Scheme	K_1 / K_2 / η_1 / η_2		0.30										
			0.2	0.3	0.4	0.5	0.6	0.7	0.8	0.9	1.0	1.1	1.2
	0.2	0.2	2.05	2.05	2.06	2.07	2.08	2.09	2.09	2.10	2.11	2.12	2.13
		0.4	2.12	2.15	2.18	2.21	2.25	2.28	2.31	2.35	2.38	2.41	2.44
		0.6	2.25	2.33	2.41	2.48	2.56	2.63	2.69	2.76	2.83	2.89	2.95
		0.8	2.49	2.62	2.75	2.87	2.98	3.09	3.20	3.30	3.39	3.49	3.58
		1.0	3.82	3.00	3.17	3.33	3.48	3.63	3.76	3.90	4.02	4.15	4.27
		1.2	3.20	3.43	3.64	3.83	4.02	4.20	4.37	4.53	4.69	4.84	4.99
	0.4	0.2	2.26	2.21	2.20	2.19	2.19	2.20	2.20	2.21	2.21	2.22	2.23
		0.4	2.36	2.33	2.33	2.35	2.38	2.40	2.43	2.46	2.49	2.51	2.54
		0.6	2.54	2.54	2.58	2.63	2.69	2.75	2.81	2.87	2.93	2.99	3.04
		0.8	2.79	2.83	2.91	3.01	3.10	3.20	3.30	3.39	3.48	3.57	3.66
		1.0	3.11	3.20	3.32	3.46	3.59	3.72	3.85	3.98	4.10	4.22	4.33
		1.2	3.47	3.60	3.77	3.95	4.12	4.28	4.45	4.60	4.75	4.90	5.04
	0.6	0.2	2.93	2.68	2.57	2.52	2.49	2.47	2.46	2.45	2.45	2.45	2.45
		0.4	3.02	2.79	2.71	2.67	2.66	2.66	2.67	2.69	2.70	2.72	2.74
		0.6	3.17	2.98	2.93	2.93	2.95	2.98	3.02	3.07	3.11	3.16	3.21
		0.8	3.37	3.24	3.23	3.27	3.33	3.41	3.48	3.56	3.64	3.72	3.80
		1.0	3.63	3.56	3.60	3.69	3.79	3.90	4.01	4.12	4.23	4.34	4.45
		1.2	3.94	3.92	4.02	4.15	4.29	4.43	4.58	4.72	4.87	5.01	5.14
$K_1 = \frac{I_1}{I_3} \cdot \frac{H_3}{H_1}$	0.8	0.2	3.78	3.38	3.18	3.06	2.98	2.93	2.89	2.86	2.84	2.83	2.82
		0.4	3.85	3.47	3.28	3.18	3.12	3.09	3.07	3.06	3.06	3.06	3.06
$K_2 = \frac{I_2}{I_3} \cdot \frac{H_3}{H_2}$		0.6	3.96	3.61	3.46	3.39	3.36	3.35	3.36	3.38	3.41	3.44	3.47
		0.8	4.12	3.82	3.70	3.67	3.68	3.72	3.76	3.82	3.88	3.94	4.01
$\eta_1 = \frac{H_1}{H_3}\sqrt{\frac{N_1}{N_3} \cdot \frac{I_3}{I_1}}$		1.0	4.32	4.07	4.01	4.03	4.08	4.16	4.24	4.33	4.43	4.52	4.62
		1.2	4.57	4.38	4.38	4.44	4.54	4.66	4.78	4.90	5.03	5.16	5.29
$\eta_2 = \frac{H_2}{H_3}\sqrt{\frac{N_2}{N_3} \cdot \frac{I_3}{I_2}}$	1.0	0.2	4.68	4.15	3.86	3.69	3.57	3.49	3.43	3.38	3.35	3.32	3.30
		0.4	4.73	4.21	3.94	3.78	3.68	3.61	3.57	3.54	3.51	3.50	3.49
N_1, N_2, N_3: axial forces of upper, middle and lower portions respectively		0.6	4.82	4.33	4.08	3.95	3.87	3.83	3.80	3.80	3.80	3.81	3.83
		0.8	4.94	4.49	4.28	4.18	4.14	4.13	4.14	4.17	4.20	4.25	4.29
		1.0	5.10	4.70	4.53	4.48	4.48	4.51	4.56	4.62	4.70	4.77	4.85
		1.2	5.30	4.95	4.84	4.83	4.88	4.96	5.05	5.15	5.26	5.37	5.48
	1.2	0.2	5.58	4.93	4.57	4.35	4.20	4.10	4.01	3.95	3.90	3.86	3.83
		0.4	5.62	4.98	4.64	4.43	4.29	4.19	4.12	4.07	4.03	4.01	3.98
		0.6	5.70	5.08	4.75	4.56	4.44	4.37	4.32	4.29	4.27	4.26	4.26
		0.8	5.80	5.21	4.91	4.75	4.66	4.61	4.59	4.59	4.60	4.62	4.65
		1.0	5.93	5.38	5.12	5.00	4.95	4.94	4.95	4.99	5.03	5.09	5.15
		1.2	6.10	5.59	5.38	5.31	5.30	5.33	5.39	5.46	5.54	5.63	5.73
	1.4	0.2	6.49	5.72	5.30	5.03	4.85	4.72	4.62	4.54	4.48	4.43	4.38
		0.4	6.53	5.77	5.35	5.10	4.93	4.80	4.71	4.64	4.59	4.55	4.51
		0.6	6.59	5.85	5.45	5.21	5.05	4.95	4.87	4.82	4.78	4.76	4.74
		0.8	6.68	5.96	5.59	5.37	5.24	5.15	5.10	5.08	5.06	5.06	5.07
		1.0	6.79	6.10	5.76	5.58	5.48	5.43	5.41	5.41	5.44	5.47	5.51
		1.2	6.93	6.28	5.98	5.84	5.78	5.76	5.79	5.83	5.89	5.95	6.03

Note: Values of factor μ_3 in this Table are calculated from the following equation:

$$\frac{\eta_1 K_1}{\eta_2 K_2} \cdot \operatorname{tg}\frac{\pi\eta_1}{\mu_3} \cdot \operatorname{tg}\frac{\pi\eta_2}{\mu_3} + \eta_1 K_1 \cdot \operatorname{tg}\frac{\pi\eta_1}{\mu_3} \cdot \operatorname{tg}\frac{\pi}{\mu_3} + \eta_2 K_2 \cdot \operatorname{tg}\frac{\pi\eta_2}{\mu_3} \cdot \operatorname{tg}\frac{\pi}{\mu_3} - 1 = 0$$

Table D-6 Effective length factor μ_3 for the lower portion of double-stepped columns with translation-free and rotation-fixed upper end

Scheme	K_1 / K_2		0.05										
	η_1	η_2	0.2	0.3	0.4	0.5	0.6	0.7	0.8	0.9	1.0	1.1	1.2
	0.2	0.2	1.99	1.99	2.00	2.00	2.01	2.02	2.02	2.03	2.04	2.05	2.06
		0.4	2.03	2.06	2.09	2.12	2.16	2.19	2.22	2.25	2.29	2.32	2.35
		0.6	2.12	2.20	2.28	2.36	2.43	2.50	2.57	2.64	2.71	2.77	2.83
		0.8	2.28	2.43	2.57	2.70	2.82	2.94	3.04	3.15	3.25	3.34	3.43
		1.0	2.53	2.76	2.96	3.13	3.29	3.44	3.59	3.72	3.85	3.98	4.10
		1.2	2.86	3.15	3.39	3.61	3.80	3.99	4.16	4.33	4.49	4.64	4.79
	0.4	0.2	1.99	1.99	2.00	2.01	2.01	2.02	2.03	2.04	2.04	2.05	2.06
		0.4	2.03	2.06	2.09	2.13	2.16	2.19	2.33	2.26	2.29	2.32	2.35
		0.6	2.12	2.20	2.28	2.36	2.44	2.51	2.58	2.64	2.71	2.77	2.84
		0.8	2.29	2.44	2.58	2.71	2.83	2.94	3.05	3.15	3.25	3.35	3.44
		1.0	2.54	2.77	2.96	3.14	3.30	3.45	3.59	3.73	3.85	3.98	4.10
		1.2	2.87	3.15	3.40	3.61	3.81	3.99	4.17	4.33	4.49	4.65	4.79
	0.6	0.2	1.99	1.98	2.00	2.01	2.02	2.03	2.04	2.04	2.05	2.06	2.07
		0.4	2.04	2.07	2.10	2.14	2.17	2.20	2.23	2.27	2.30	2.33	2.36
		0.6	2.13	2.21	2.29	2.37	2.45	2.52	2.59	2.65	2.72	2.78	2.84
		0.8	2.30	2.45	2.59	2.72	2.84	2.95	3.06	3.16	3.26	3.35	3.44
		1.0	2.56	2.78	2.97	3.15	3.31	3.46	3.60	3.73	3.86	3.99	4.11
		1.2	2.89	3.17	3.41	3.62	3.82	4.00	4.17	4.34	4.50	4.65	4.80
	0.8	0.2	2.00	2.01	2.02	2.02	2.03	2.04	2.05	2.05	2.06	2.07	2.08
		0.4	2.05	2.08	2.12	2.15	2.18	2.21	2.25	2.28	2.31	2.34	2.37
		0.6	2.15	2.23	2.31	2.39	2.46	2.53	2.60	2.67	2.73	2.79	2.85
		0.8	2.32	2.47	2.61	2.73	2.85	2.96	3.07	3.17	3.27	3.36	3.45
		1.0	2.59	2.80	2.99	3.16	3.32	3.47	3.61	3.74	3.87	3.99	4.11
		1.2	2.92	3.19	3.42	3.63	3.83	4.01	4.18	4.35	4.51	4.66	4.81
	1.0	0.2	2.02	2.02	2.03	2.04	2.05	2.05	2.06	2.07	2.08	2.09	2.09
		0.4	2.07	2.10	2.14	2.17	2.20	2.23	2.26	2.30	2.33	2.36	2.39
		0.6	2.17	2.26	2.33	2.41	2.48	2.55	2.62	2.68	2.75	2.81	2.87
		0.8	2.36	2.50	2.63	2.76	2.87	2.98	3.08	3.19	3.28	3.38	3.47
		1.0	2.62	2.83	3.01	3.18	3.34	3.48	3.62	3.75	3.88	4.01	4.12
		1.2	2.95	3.21	3.44	3.65	3.82	4.02	4.20	4.36	4.52	4.67	4.81
	1.2	0.2	2.04	2.05	2.06	2.06	2.07	2.08	2.09	2.09	2.10	2.11	2.12
		0.4	2.10	2.13	2.17	2.20	2.23	2.26	2.29	2.32	2.35	2.38	2.41
		0.6	2.22	2.29	2.37	2.44	2.51	2.58	2.64	2.71	2.77	2.83	2.89
		0.8	2.41	2.54	2.67	2.78	2.90	3.00	3.11	3.20	3.30	3.39	3.48
		1.0	2.68	2.87	3.04	3.21	3.36	3.50	3.64	3.77	3.90	4.02	4.14
		1.2	3.00	3.25	3.47	3.67	3.86	4.04	4.21	4.37	4.53	4.68	4.83
	1.4	0.2	2.10	2.10	2.10	2.11	2.11	2.12	2.13	2.13	2.14	2.15	2.15
		0.4	2.17	2.19	2.21	2.24	2.27	2.30	2.33	2.36	2.39	2.41	2.44
		0.6	2.29	2.35	2.41	2.48	2.55	2.61	2.67	2.74	2.80	2.86	2.91
		0.8	2.48	2.60	2.71	2.82	2.93	3.03	3.13	3.23	3.32	3.41	3.50
		1.0	2.74	2.92	3.08	3.24	3.39	3.53	3.66	3.79	3.92	4.04	4.15
		1.2	3.06	3.29	3.50	3.70	3.89	4.06	4.23	4.39	4.55	4.70	4.84

$$K_1 = \frac{I_1}{I_3} \cdot \frac{H_3}{H_1}$$

$$K_2 = \frac{I_2}{I_3} \cdot \frac{H_3}{H_2}$$

$$\eta_1 = \frac{H_1}{H_3}\sqrt{\frac{N_1}{N_3} \cdot \frac{I_3}{I_1}}$$

$$\eta_2 = \frac{H_2}{H_3}\sqrt{\frac{N_2}{N_3} \cdot \frac{I_3}{I_2}}$$

N_1, N_2, N_3: axial forces of upper, middle and lower portions respectively

Table D-6 (Continued)

Scheme	K_1 / K_2 / η_1	η_2	0.10										
			0.2	0.3	0.4	0.5	0.6	0.7	0.8	0.9	1.0	1.1	1.2
	0.2	0.2	1.96	1.96	1.97	1.97	1.98	1.98	1.99	2.00	2.00	2.01	2.02
		0.4	2.00	2.02	2.05	2.08	2.11	2.14	2.17	2.20	2.23	2.26	2.29
		0.6	2.07	2.14	2.22	2.29	2.36	2.43	2.50	2.56	2.63	2.69	2.75
		0.8	2.20	2.35	2.48	2.61	2.73	2.84	2.94	3.05	3.14	3.24	3.33
		1.0	2.41	2.64	2.83	3.01	3.17	3.32	3.46	3.59	3.72	3.85	3.97
		1.2	2.70	2.99	3.23	3.45	3.65	3.84	4.01	4.18	4.34	4.49	4.64
	0.4	0.2	1.96	1.97	1.97	1.98	1.98	1.99	2.00	2.00	2.01	2.02	2.03
		0.4	2.00	2.03	2.06	2.09	2.12	2.15	2.18	2.21	2.24	2.27	2.30
		0.6	2.08	2.15	2.23	2.30	2.37	2.44	2.51	2.57	2.64	2.70	2.76
		0.8	2.21	2.36	2.49	2.62	2.73	2.85	2.95	3.05	3.15	3.24	3.34
		1.0	2.43	2.65	2.84	3.02	3.18	3.33	3.47	3.60	3.73	3.85	3.97
		1.2	2.71	3.00	3.24	3.46	3.66	3.85	4.02	4.19	4.34	4.49	4.64
	0.6	0.2	1.97	1.98	1.98	1.99	2.00	2.00	2.01	2.02	2.02	2.03	2.04
		0.4	2.01	2.04	2.07	2.10	2.13	2.16	2.19	2.22	2.26	2.29	2.32
		0.6	2.09	2.17	2.24	2.32	2.39	2.46	2.52	2.59	2.65	2.71	2.77
		0.8	2.23	2.38	2.51	2.64	2.75	2.86	2.97	3.07	3.16	3.26	3.35
		1.0	2.45	2.68	2.86	3.03	3.19	3.34	3.48	3.61	3.74	3.86	3.98
		1.2	2.74	3.02	3.26	3.48	3.67	3.86	4.03	4.20	4.35	4.50	4.65
	0.8	0.2	1.99	1.99	2.00	2.01	2.01	2.02	2.03	2.04	2.04	2.05	2.06
		0.4	2.03	2.06	2.09	2.12	2.15	2.19	2.22	2.25	2.28	2.31	2.34
		0.6	2.12	2.19	2.27	2.34	2.41	2.48	2.55	2.61	2.67	2.73	2.79
		0.8	2.27	2.41	2.54	2.66	2.78	2.89	2.99	3.09	3.18	3.28	3.37
		1.0	2.49	2.70	2.89	3.06	3.21	3.36	3.50	3.63	3.76	3.88	4.00
		1.2	2.78	3.05	3.29	3.50	3.69	3.88	4.05	4.21	4.37	4.52	4.66
	1.0	0.2	2.01	2.02	2.03	2.04	2.04	2.05	2.06	2.07	2.07	2.08	2.09
		0.4	2.06	2.10	2.13	2.16	2.19	2.22	2.25	2.28	2.31	2.34	2.37
		0.6	2.16	2.24	2.31	2.38	2.45	2.51	2.58	2.64	2.70	2.76	2.82
		0.8	2.32	2.46	2.58	2.70	2.81	2.92	3.02	3.12	3.21	3.30	3.39
		1.0	2.55	2.75	2.93	3.09	3.25	3.39	3.53	3.66	3.78	3.90	4.02
		1.2	2.84	3.10	3.32	3.53	3.72	3.90	4.07	4.23	4.39	4.54	4.68
	1.2	0.2	2.07	2.08	2.08	2.09	2.09	2.10	2.11	2.11	2.12	2.13	2.13
		0.4	2.13	2.16	2.18	2.21	2.24	2.27	2.30	2.33	2.35	2.38	2.41
		0.6	2.24	2.30	2.37	2.43	2.50	2.56	2.63	2.68	2.74	2.80	2.86
		0.8	2.41	2.53	2.64	2.75	2.86	2.96	3.06	3.15	3.24	3.33	3.42
		1.0	2.64	2.82	2.98	3.14	3.29	3.43	3.56	3.69	3.81	3.93	4.04
		1.2	2.92	3.16	3.37	3.57	3.76	3.93	4.10	4.26	4.41	4.56	4.70
	1.4	0.2	2.20	2.18	2.17	2.17	2.17	2.18	2.18	2.19	2.19	2.20	2.20
		0.4	2.26	2.26	2.27	2.29	2.32	2.34	2.37	2.39	2.42	2.44	2.47
		0.6	2.37	2.41	2.46	2.51	2.57	2.63	2.68	2.74	2.80	2.85	2.91
		0.8	2.53	2.62	2.72	2.82	2.92	3.01	3.11	3.20	3.29	3.37	3.46
		1.0	2.75	2.90	3.05	3.20	3.34	3.47	3.60	3.72	3.84	3.96	4.07
		1.2	3.02	3.23	3.43	3.62	3.80	3.97	4.13	4.29	4.44	4.59	4.73



$$K_1 = \frac{I_1}{I_3} \cdot \frac{H_3}{H_1}$$

$$K_2 = \frac{I_2}{I_3} \cdot \frac{H_3}{H_2}$$

$$\eta_1 = \frac{H_1}{H_3}\sqrt{\frac{N_1}{N_3} \cdot \frac{I_3}{I_1}}$$

$$\eta_2 = \frac{H_2}{H_3}\sqrt{\frac{N_2}{N_3} \cdot \frac{I_3}{I_2}}$$

N_1, N_2, N_3: axial forces of upper, middle and lower portions respectively

Table D-6 (Continued)

Scheme	K_1 / K_2 / η_1 / η_2		K_1 = 0.20										
			K_2 = 0.2	0.3	0.4	0.5	0.6	0.7	0.8	0.9	1.0	1.1	1.2
	η_1 = 0.2	0.2	1.94	1.93	1.93	1.93	1.93	1.93	1.94	1.94	1.95	1.95	1.96
		0.4	1.96	1.98	1.99	2.02	2.04	2.07	2.09	2.12	2.15	2.17	2.20
		0.6	2.02	2.07	2.13	2.19	2.26	2.32	2.38	2.44	2.50	2.56	2.62
		0.8	2.12	2.23	2.35	2.47	2.58	2.68	2.78	2.88	2.98	3.07	3.15
		1.0	2.28	2.47	2.65	2.82	2.97	3.12	3.26	3.39	3.51	3.63	3.75
		1.2	2.50	2.77	3.01	3.22	3.42	3.60	3.77	3.93	4.09	4.23	4.38
	η_1 = 0.4	0.2	1.93	1.93	1.93	1.93	1.94	1.94	1.95	1.95	1.96	1.96	1.97
		0.4	1.97	1.98	2.00	2.03	2.05	2.08	2.11	2.13	2.16	2.19	2.22
		0.6	2.03	2.08	2.14	2.21	2.27	2.33	2.40	2.46	2.52	2.58	2.63
		0.8	2.13	2.25	2.37	2.48	2.59	2.70	2.80	2.90	2.99	3.08	3.17
		1.0	2.29	2.49	2.67	2.83	2.99	3.13	3.27	3.40	3.53	3.64	3.76
		1.2	2.52	2.79	3.02	3.23	3.43	3.61	3.78	3.94	4.10	4.24	4.39
	η_1 = 0.6	0.2	1.95	1.95	1.95	1.95	1.96	1.96	1.97	1.97	1.98	1.98	1.99
		0.4	1.98	2.00	2.02	2.05	2.08	2.10	2.13	2.16	2.19	2.21	2.24
		0.6	2.04	2.10	2.17	2.23	2.30	2.36	2.42	2.48	2.54	2.60	2.66
		0.8	2.15	2.27	2.39	2.51	2.62	2.72	2.82	2.92	3.01	3.10	3.19
		1.0	2.32	2.52	2.70	2.86	3.01	3.16	3.29	3.42	3.55	3.66	3.78
		1.2	2.55	2.82	3.05	3.26	3.45	3.63	3.80	3.96	4.11	4.26	4.40
	η_1 = 0.8	0.2	1.97	1.97	1.98	1.98	1.99	1.99	2.00	2.01	2.01	2.02	2.03
		0.4	2.00	2.03	2.06	2.08	2.11	2.14	2.17	2.20	2.22	2.25	2.28
		0.6	2.08	2.14	2.21	2.27	2.34	2.40	2.46	2.52	2.58	2.64	2.69
		0.8	2.19	2.32	2.44	2.55	2.66	2.76	2.86	2.96	3.05	3.13	3.22
		1.0	2.37	2.57	2.74	2.90	3.05	3.19	3.33	3.45	3.58	3.69	3.81
		1.2	2.61	2.87	3.09	3.30	3.49	3.66	3.83	3.99	4.14	4.29	4.42
	η_1 = 1.0	0.2	2.01	2.02	2.03	2.03	2.04	2.05	2.05	2.06	2.07	2.07	2.08
		0.4	2.06	2.09	2.11	2.14	2.17	2.20	2.23	2.25	2.28	2.31	2.33
		0.6	2.14	2.21	2.27	2.34	2.40	2.46	2.52	2.58	2.63	2.69	2.74
		0.8	2.27	2.39	2.51	2.62	2.72	2.82	2.91	3.00	3.09	3.18	3.26
		1.0	2.46	2.64	2.81	2.96	3.10	3.24	3.37	3.50	3.61	3.73	3.84
		1.2	2.69	2.94	3.15	3.35	3.53	3.71	3.87	4.02	4.17	4.32	4.46
	η_1 = 1.2	0.2	2.13	2.12	2.12	2.13	2.13	2.14	2.14	2.15	2.15	2.16	2.16
		0.4	2.18	2.19	2.21	2.24	2.26	2.29	2.31	2.34	2.36	2.38	2.41
		0.6	2.27	2.32	2.37	2.43	2.49	2.54	2.60	2.65	2.70	2.76	2.81
		0.8	2.41	2.50	2.60	2.70	2.80	2.89	2.98	3.07	3.15	3.23	3.32
		1.0	2.59	2.74	2.89	3.04	3.17	3.30	3.43	3.55	3.66	3.78	3.89
		1.2	2.81	3.03	3.23	3.42	3.59	3.76	3.92	4.07	4.22	4.36	4.49
	η_1 = 1.4	0.2	2.35	2.31	2.29	2.28	2.27	2.27	2.27	2.27	2.27	2.28	2.28
		0.4	2.40	2.37	2.37	2.38	2.39	2.41	2.43	2.45	2.47	2.49	2.51
		0.6	2.48	2.49	2.52	2.56	2.61	2.65	2.70	2.75	2.80	2.85	2.89
		0.8	2.60	2.66	2.73	2.82	2.90	2.98	3.07	3.15	3.23	3.31	3.38
		1.0	2.77	2.88	3.01	3.14	3.26	3.38	3.50	3.62	3.73	3.84	3.94
		1.2	2.97	3.15	3.33	3.50	3.67	3.83	3.98	4.13	4.27	4.41	4.54



$$K_1 = \frac{I_1}{I_3} \cdot \frac{H_3}{H_1}$$

$$K_2 = \frac{I_2}{I_3} \cdot \frac{H_3}{H_2}$$

$$\eta_1 = \frac{H_1}{H_3}\sqrt{\frac{N_1}{N_3} \cdot \frac{I_3}{I_1}}$$

$$\eta_2 = \frac{H_2}{H_3}\sqrt{\frac{N_2}{N_3} \cdot \frac{I_3}{I_2}}$$

N_1, N_2, N_3: axial forces of upper, middle and lower portions respectively

Table D-6 (Continued)

Scheme	K_1 / K_2 / η_1 / η_2		0.30										
			0.2	0.3	0.4	0.5	0.6	0.7	0.8	0.9	1.0	1.1	1.2
	0.2	0.2	1.92	1.91	1.90	1.89	1.89	1.89	1.90	1.90	1.90	1.90	1.91
		0.4	1.95	1.95	1.96	1.97	1.99	2.01	2.04	2.06	2.08	2.11	2.13
		0.6	1.99	2.03	2.08	2.13	2.18	2.24	2.29	2.35	2.41	2.46	2.52
		0.8	2.07	2.16	2.27	2.37	2.47	2.57	2.66	2.75	2.84	2.93	3.01
		1.0	2.20	2.37	2.53	2.69	2.83	2.97	3.10	3.23	3.35	3.46	3.57
		1.2	2.39	2.63	2.85	3.05	3.24	3.42	3.58	3.74	3.89	4.03	4.17
	0.4	0.2	1.92	1.91	1.91	1.90	1.90	1.91	1.91	1.91	1.92	1.92	1.92
		0.4	1.95	1.96	1.97	1.99	2.01	2.03	2.05	2.08	2.10	2.12	2.15
		0.6	2.00	2.04	2.09	2.14	2.20	2.26	2.31	2.37	2.42	2.48	2.53
		0.8	2.08	2.18	2.28	2.39	2.49	2.59	2.68	2.77	2.86	2.95	3.03
		1.0	2.22	2.39	2.55	2.71	2.85	2.99	3.12	3.24	3.36	3.48	3.59
		1.2	2.41	2.65	2.87	3.07	3.26	3.43	3.60	3.75	3.90	4.04	4.18
	0.6	0.2	1.93	1.93	1.92	1.92	1.93	1.93	1.93	1.94	1.94	1.95	1.95
		0.4	1.96	1.97	1.99	2.01	2.03	2.06	2.08	2.11	2.13	2.16	2.18
		0.6	2.02	2.06	2.12	2.17	2.23	2.29	2.36	2.40	2.46	2.51	2.57
		0.8	2.11	2.21	2.32	2.42	2.52	2.62	2.71	2.80	2.89	2.98	3.06
		1.0	2.25	2.42	2.59	2.74	2.88	3.02	3.15	3.27	3.39	3.50	3.61
		1.2	2.44	2.69	2.91	3.11	3.29	3.46	3.62	3.78	3.93	4.07	4.20
	0.8	0.2	1.96	1.95	1.96	1.96	1.97	1.97	1.98	1.98	1.99	1.99	2.00
		0.4	1.99	2.01	2.03	2.05	2.08	2.10	2.13	2.15	2.18	2.21	2.23
		0.6	2.05	2.10	2.16	2.22	2.28	2.34	2.40	2.45	2.51	2.56	2.81
		0.8	2.15	2.26	2.37	2.47	2.57	2.67	2.76	2.85	2.94	3.02	3.10
		1.0	2.30	2.48	2.64	2.79	2.93	3.07	3.19	3.31	3.43	3.54	3.65
		1.2	2.50	2.74	2.96	3.15	3.33	3.50	3.66	3.81	3.96	4.10	4.23
	1.0	0.2	2.01	2.02	2.02	2.03	2.04	2.04	2.05	2.06	2.06	2.07	2.07
		0.4	2.05	2.08	2.10	2.13	2.16	2.18	2.21	2.23	2.26	2.28	2.31
		0.6	2.13	2.19	2.25	2.30	2.36	2.42	2.47	2.53	2.58	2.63	2.68
		0.8	2.24	2.35	2.45	2.55	2.65	2.74	2.83	2.92	3.00	3.08	3.16
		1.0	2.40	2.57	2.72	2.86	3.00	3.13	3.25	3.37	3.48	3.59	3.70
		1.2	2.60	2.83	3.03	3.22	3.39	3.56	3.71	3.86	4.01	4.14	4.28
	1.2	0.2	2.17	2.16	2.16	2.16	2.16	2.16	2.17	2.17	2.18	2.18	2.19
		0.4	2.22	2.22	2.24	2.26	2.28	2.30	2.32	2.34	2.36	2.39	2.41
		0.6	2.29	2.33	2.38	2.43	2.48	2.53	2.58	2.62	2.67	2.72	2.77
		0.8	2.41	2.49	2.58	2.67	2.75	2.84	2.92	3.00	3.08	3.16	3.23
		1.0	2.56	2.69	2.83	2.96	3.09	3.21	3.33	3.44	3.55	3.66	3.76
		1.2	2.74	2.94	3.13	3.30	3.47	3.63	3.78	3.92	4.06	4.20	4.33
	1.4	0.2	2.45	2.40	2.37	2.35	2.35	2.34	2.34	2.34	2.34	2.34	2.34
		0.4	2.48	2.45	2.44	2.44	2.45	2.46	2.48	2.49	2.51	2.53	2.55
		0.6	2.55	2.54	2.56	2.60	2.63	2.67	2.71	2.75	2.80	2.84	2.88
		0.8	2.64	2.68	2.74	2.81	2.89	2.96	3.04	3.11	3.18	3.25	3.33
		1.0	2.77	2.87	2.98	3.09	3.20	3.32	3.43	3.53	3.64	3.74	3.84
		1.2	2.94	3.09	3.26	3.41	3.57	3.72	3.86	4.00	4.13	4.26	4.39

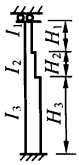

$$K_1 = \frac{I_1}{I_3} \cdot \frac{H_3}{H_1}$$

$$K_2 = \frac{I_2}{I_3} \cdot \frac{H_3}{H_2}$$

$$\eta_1 = \frac{H_1}{H_3}\sqrt{\frac{N_1}{N_3} \cdot \frac{I_3}{I_1}}$$

$$\eta_2 = \frac{H_2}{H_3}\sqrt{\frac{N_2}{N_3} \cdot \frac{I_3}{I_2}}$$

N_1, N_2, N_3: axial forces of upper, middle and lower portions respectively

Note: Values of factor μ_3 in this Table are calculated from the following equation:

$$\frac{\eta_1 K_1}{\eta_2 K_2} \cdot \operatorname{ctg}\frac{\pi\eta_1}{\mu_3} \cdot \operatorname{ctg}\frac{\pi\eta_2}{\mu_3} + \frac{\eta_1 K_1}{(\eta_2 K_2)^2} \cdot \operatorname{ctg}\frac{\pi\eta_1}{\mu_3} \cdot \operatorname{ctg}\frac{\pi}{\mu_3} + \frac{1}{\eta_2 K_2} \cdot \operatorname{ctg}\frac{\pi\eta_2}{\mu_3} \cdot \operatorname{ctg}\frac{\pi}{\mu_3} - 1 = 0$$

Appendix E Classification of members and connections for fatigue calculation

Table E Classification of members and connections

Item No.	Sketch	Description	Category
1	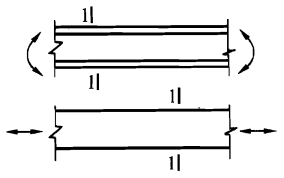	Base metal at locations without connection (1)Rolled shapes (2)Steel plates a.Both edges as rolled or planed b.Both edges auto- or semiauto-flame-cut (the cutting quality shall conform to the current national standard "Code for acceptance of construction quality of steel structures" GB 50205)	 1 1 2
2	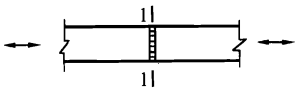	Base metal adjacent to transverse butt weld: (1)Welds conforming to the first class standard given in "Code for acceptance of construction quality of steel structures" GB 50205 (2)Welds machined and ground flush and conforming to the first class standard	 3 2
3	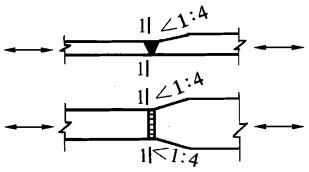	Base metal adjacent to transverse butt weld connecting parts of different thicknesses (or widths), with weld machined and ground to a smooth transition and conforming to the first class standard	2
4	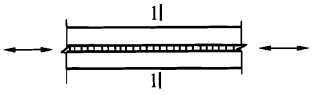	Base metal adjacent to longitudinal butt weld conforming to the second class standard	2
5	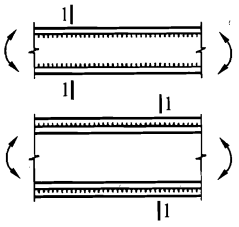	Base metal adjacent to flange connection weld (1) Flange-web connection weld a. Automatic second class combined butt T- and fillet weld b.Automatic fillet weld, appearance quality conforming to second class standard c.Manual fillet weld, appearance quality conforming to second class standard (2) Weld between twin flange plates a.Automatic fillet weld, appearance quality conforming to second class standard b.Manual fillet weld, appearance quality conforming to second class standard	 2 3 4 3 4

Table E (Continued)

Item No.	Sketch	Description	Category
6		Base matal adjacent to the end of the transverse stiffeners (1)The weld-run does not stop at the end of the stiffener (return welding adopted) (2)The weld-run stops at the end of the stiffener	4 5
7	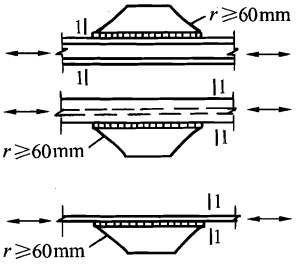	Base metal at locations where a trapezoidal gusset plate is welded to beam flange, beam web and truss members with butt welds and, after welding, the transition is machined flush and ground to a smooth curve, where no defects due to start-stop of weld-run shall exist	5
8	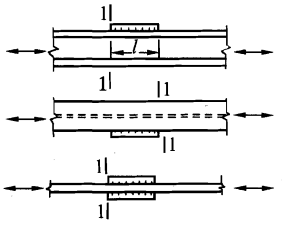	Base metal at location where a rectangular gusset plate is welded to beam flange or web, $l>150$mm	7
9	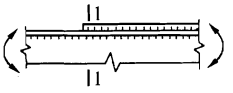	Base metal of beam flange at the end of cover plate (with transverse fillet weld across the plate end)	7
10		Base metal at the transition region to the transverse fillet weld	6
11	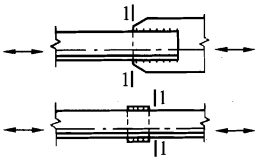	Base metal at the end of welded connection with two side fillet welds	8
12	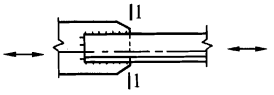	Base metal at the end of welded connection with 2 side and 1 transverse fillet welds	7
13	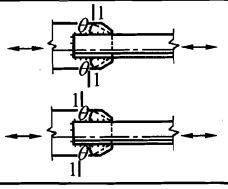	Base metal of gusset plate connected with 2 side fillet welds, or 2 side and 1 transverse fillet weld (the effective width of gusset plate is calculated according to the stress dispersal angle equal to 30°)	7

Table E (Continued)

Item No.	Sketch	Description	Category
14	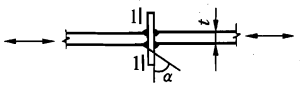	Base metal at location of K-shape groove combined butt T-and fillet welds, misalignment of two plate axes being$<0.15t$, second class welds and weld toe angle $\alpha \leqslant 45°$	5
15	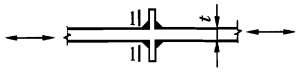	Base metal of cruciform joints at location of the fillet welds, misalignment of two plate axes being$<0.15t$	7
16	Fillet weld	Checked by the shear stress range determined with the effective area of fillet welds	8
17	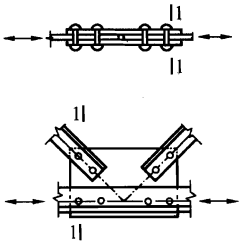	Base metal at location of riveted connections	3
18	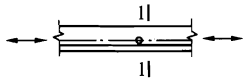	Base metal at locations of tie bolts and void holes	3
19	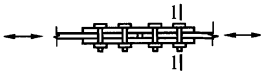	Base metal at location of high-strength bolted friction type connections	2

Note: 1 All butt welds as well as combined butt T-and fillet welds must be fully penetrated. The outside dimensions of all welds must conform to the requirements of the current standard "Weld outer dimensions of steel construction" JB 7949.

2 Fillet welds shall comply with the requirements in Clauses 8.2.7 and 8.2.8.

3 In Item No. 16, the shear stress range $\Delta\tau = \tau_{max} - \tau_{min}$, where τ_{min} is to be taken as positive when it is in the same direction as τ_{max}, and negative when it is in the opposite direction of τ_{max}.

4 Stresses in Items 17,18 shall be computed on net cross-sectional area, while in Item 19 on gross sectional area.

Appendix F Stability calculation of truss gusset plate subject to compressive force of the diagonal web member

F.0.1 Basic assumptions

1 In Fig.F.0.1, the *B-A-C-D* is the buckling line when the gusset plate is instable, where $\overline{BA}$ is parallel to the chord member and $\overline{CD} \perp \overline{BA}$.

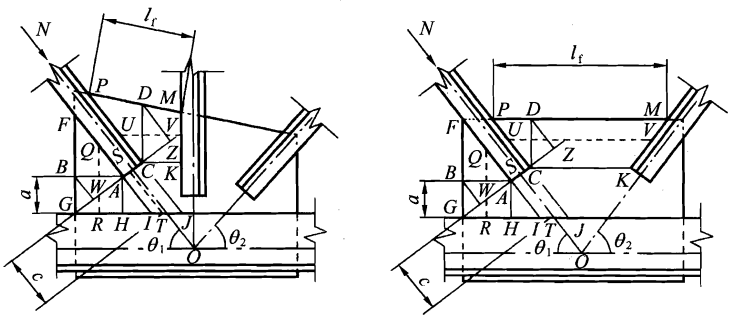

Fig. F.0.1 sketch for calculating stability of the gusset plate
(a) With vertical member; (b) Without vertical member

2 Under the action of compressive force N from diagonal web member, $\overline{BA}$ zone (plate *FBGHA*), $\overline{AC}$ zone (plate *AIJC*) and $\overline{CD}$ zone (plate *CKMP*) are in compression simultaneously. After one of the zones buckled, the other zones will be buckled subsequently, so that the stability of each zone shall be calculated individually.

F.0.2 Calculation method:

$\overline{BA}$ zone:

$$\frac{b_1}{(b_1 + b_2 + b_3)} N \sin\theta_1 \leqslant l_1 t \varphi_1 f \qquad \text{(F.0.2-1)}$$

$\overline{AC}$ zone:

$$\frac{b_2}{(b_1 + b_2 + b_3)} N \leqslant l_2 t \varphi_2 f \qquad \text{(F.0.2-2)}$$

$\overline{CD}$ zone:

$$\frac{b_3}{(b_1 + b_2 + b_3)} N \cos\theta_1 \leqslant l_3 t \varphi_3 f \qquad \text{(F.0.2-3)}$$

where t——thickness of the gusset plate;

N——axial force of the diagonal web member in compression;

l_1, l_2, l_3——length of buckling lines $\overline{BA}, \overline{AC}, \overline{CD}$ respectively;

$\varphi_1, \varphi_2, \varphi_3$——stability factors of each plate zone in axial compression, can be taken as

Class b section; The corresponding slenderness ratio are: $\lambda_1 = 2.77\dfrac{\overline{QR}}{t}$, $\lambda_2 = 2.77\dfrac{\overline{ST}}{t}$, $\lambda_3 = 2.77\dfrac{\overline{UV}}{t}$, where $\overline{QR}$, $\overline{ST}$, $\overline{UV}$ are the length of mid lines of three plate zones $\overline{BA}$, $\overline{AC}$, $\overline{CD}$ in compression, and $\overline{ST} = c$; $b_1(\overline{WA})$, $b_2(\overline{AC})$, $b_3(\overline{CZ})$ are the length of each buckled lines projected on the lines of effective width. When a gusset plate with $l_f/t > 60\sqrt{235/f_y}$ (l_f is the free edge length of the gusset plate) has the free edge stiffened, and no vertical web member at the joint, the above calculation method can be applied, checking $\overline{BA}$ zone and $\overline{AC}$ zone only, but $\overline{CD}$ zone need not be checked.

Explanation of wording in this Code

1. In order to treat different situations according to their individual conditions during the implementation of this code, words denoting the different degres of strictness of demands are explained as follows:

1) Words denoting a very strict or mandatory requirement:

"must" is used for affirmation, "must not" is used for negation.

2) Words denoting a strict requirement under normal conditions:

"shall" is used for affirmation, "shall not" is used for negation.

3) Words denoting a permission of slight choice or an indication of the most suitable choice when conditions allow:

"should" or "may" are used for affirmation, "should not" is used for negation.

2. "shall be in accordance with" or "shall comply with" is used to indicate that it is necessary to implement items in this code according to designated standards, codes or other relative regulations.

中华人民共和国国家标准

钢结构设计规范

Code for design of steel structures

GB 50017—2003

主编部门：中华人民共和国建设部
批准部门：中华人民共和国建设部
施行日期：2003年12月1日

2003 北 京

中华人民共和国建设部
公　　告

第147号

建设部关于发布国家标准《钢结构设计规范》的公告

现批准《钢结构设计规范》为国家标准，编号为GB 50017—2003，自2003年12月1日起实施。其中，第1.0.5、3.1.2、3.1.3、3.1.4、3.1.5、3.2.1、3.3.3、3.4.1、3.4.2、8.1.4、8.3.6、8.9.3、8.9.5、9.1.3条为强制性条文，必须严格执行。原《钢结构设计规范》GBJ 17—88同时废止。

本规范由建设部标准定额研究所组织中国计划出版社出版发行。

中华人民共和国建设部

二〇〇三年四月二十五日

前　言

根据建设部建标［1997］第108号文的通知要求，由北京钢铁设计研究总院会同有关设计、教学和科研单位组成修订编制小组，对《钢结构设计规范》GBJ 17—88进行全面修订。在修订过程中，制订了全面修订大纲，参考了大量的国外钢结构规范。规范初稿完成后，在全国范围广泛征求意见，通过初稿、征求意见稿、送审稿，多次修改并组织了十余个参编单位完成了新、老规范对比的试设计，最后于2001年12月完成《钢结构设计规范》GB 50017—2003报批稿。本次修订的主要内容有：

1. 原规范第一章1.0.5条中有关“焊缝质量级别”的规定，由说明改为正文，列为第7章7.1.1条，并增加了确定焊缝质量级别的原则和具体规定。

2. 按建标［1996］626号文《工程建设标准编写规定》的要求，增加“术语”内容条文，并与“符号”一同编入第2章；原规范第二章“材料”的内容列入第3章3.3节“材料选用”。

3. 按照钢材新的国家标准，推荐了Q235钢、Q345钢、Q390钢和增补了Q420钢等。对各类钢结构应具有的材质保证提出了更完整的要求，增加了Q235钢保证0℃冲击韧性的适用条件，增加了采用Z向钢及耐候钢的原则规定等，同时对各钢种设计指标作了少量调整。

4. 在第3章中增加了“荷载和荷载效应计算”一节，着重提出了无支撑纯框架宜采用考虑变形对内力影响的二阶弹性分析方法。取消了原规范中吊车横向水平荷载的增大系数，给出了考虑吊车摆动产生横向水平力的计算公式。

5.“结构和构件变形的规定”的修改内容为：

1）在规范正文中只提设计原则，将变形限值的表格列入附录；

2）根据要求和经验可对变形限值适当调整。规定吊车梁的挠度用一台吊车轮压标准值计算。

6. 原规范梁腹板局部稳定的计算公式有较大改动，不再把腹板看成是完全弹性的完善板，而是考虑非弹性变形和几何缺陷的影响，同时给出利用屈曲后强度的计算方法，腹板的约束系数也有所调整。将原规范正文中根据弹性板确定加劲肋间距的计算公式取消。

7. 增补了组成板件厚度 $t\geqslant 40\text{mm}$ 的工字形截面和箱形截面在计算轴心受压构件时的截面类别规定，并增加了d类截面的 φ 值。

8. 增补了单轴对称截面轴压构件考虑绕对称轴弯扭屈曲的计算方法。

9. 修改了减小受压构件或受压翼缘自由长度的侧向支承的支撑力计算方法，修改了交叉腹杆在平面外计算长度的确定方法。

10. 将框架明确界定为无支撑纯框架、强支撑框架和弱支撑框架三类，并给出了各类框架计算长度的计算方法。

11. 新增了带有摇摆柱的无支撑纯框架柱和弱支撑框架柱的计算长度确定方法。

12. 对应力变化的循环次数 n 修改为：n 等于或大于 5×10^4 次时，应进行疲劳计算（原规范为 n 等于或大于 10^5 次时才需进行疲劳计算）。同时对进行疲劳计算的构件和连接

分类作了少量修改。

13. 修改了在T形截面受压构件中，轴心受压构件和弯矩使腹板自由边受拉的压弯构件，腹板高度与其厚度之比的规定。

14. 增加了“梁与柱的刚性连接”和在国内外规范中首次提出的“连接节点处板件的计算”等两节，其主要内容为：

1）梁与柱刚性连接时如不设置柱的横向加劲肋，对柱腹板厚度或翼缘厚度要求的条文。

2）板件在拉剪作用下的强度计算以及桁架节点板的强度计算和有关稳定计算方法及规定。

15. 补充了平板支座、球形支座及橡胶支座等内容的条文。

16. 增加了插入式柱脚、埋入式柱脚及外包式柱脚的设计和构造规定。

17. 增加了大跨度屋盖结构的设计和构造要求的规定。

18. 增加了提高寒冷地区结构抗脆断能力的要求的规定。

19. 在塑性设计和钢与混凝土组合梁中取消了原规范对钢材和连接的强度设计值要乘折减系数0.9的规定。

20. 增加了空间圆管节点强度计算公式。增补了矩形管或方形管结构平面管节点强度的计算方法及有关构造规定。

21. 取消了原规范第十一章“圆钢、小角钢的轻型钢结构”。

22. 增补了钢与混凝土连续组合梁负弯矩部位的计算方法，混凝土翼板用压型钢板做底模的组合梁计算和构造特点，部分抗剪连接的组合梁的设计规定以及组合梁挠度计算。

本规范中，黑体字标识的条文为强制性条文，必须严格执行。

本规范由建设部负责管理和对强制性条文的解释，北京钢铁设计研究总院负责具体内容的解释。在执行规范过程中，请各单位结合工程实际总结经验。对本规范的意见或建议，请寄至北京钢铁设计研究总院《钢结构设计规范》国家标准管理组（地址：北京白广路四号；邮编：100053；传真：010—63521024）。

本规范主编单位和主要起草人：

主 编 单 位：北京钢铁设计研究总院

参 编 单 位：重庆大学
西安建筑科技大学
重庆钢铁设计研究院
清华大学
浙江大学
哈尔滨工业大学
同济大学
天津大学
华南理工大学
水电部东北勘测设计院
中国航空规划设计院
中元国际工程设计研究院

冶金建筑研究院
西北电力设计院
马鞍山钢铁设计研究院
中国石化工程建设公司
武汉钢铁设计研究院
上海冶金设计院
马鞍山钢铁股份有限公司
杭萧钢结构公司
莱芜钢铁集团
喜利得（中国）有限公司
浙江精工钢结构公司
鞍山东方轧钢公司
宝力公司
上海彭浦总厂

主要起草人：张启文　夏志斌　黄友明　陈绍蕃　王国周
魏明钟　赵熙元　崔　佳　张耀春　沈祖炎
刘锡良　梁启智　俞国音　刘树屯　崔元山
冯　廉　夏正中　戴国欣　童根树　顾　强
舒兴平　邹　浩　石永久　但泽义　聂建国
陈以一　丁　阳　徐国彬　魏潮文　陈传铮
陈国栋　穆海生　张平远　陶红斌　王　稚
田思方　李茂新　陈瑞金　曹品然　武振宇
邹亦农　侯　宬　郭耀杰　芦小松　朱　丹
刘　刚　张小平　黄明鑫　胡　勇　张继宏
严正庭

目　　次

1　总则 …… 138
2　术语和符号 …… 139
2.1　术语 …… 139
2.2　符号 …… 141
3　基本设计规定 …… 145
3.1　设计原则 …… 145
3.2　荷载和荷载效应计算 …… 145
3.3　材料选用 …… 147
3.4　设计指标 …… 148
3.5　结构或构件变形的规定 …… 151
4　受弯构件的计算 …… 153
4.1　强度 …… 153
4.2　整体稳定 …… 154
4.3　局部稳定 …… 155
4.4　组合梁腹板考虑屈曲后强度的计算 …… 160
5　轴心受力构件和拉弯、压弯构件的计算 …… 163
5.1　轴心受力构件 …… 163
5.2　拉弯构件和压弯构件 …… 169
5.3　构件的计算长度和容许长细比 …… 173
5.4　受压构件的局部稳定 …… 177
6　疲劳计算 …… 179
6.1　一般规定 …… 179
6.2　疲劳计算 …… 179
7　连接计算 …… 181
7.1　焊缝连接 …… 181
7.2　紧固件（螺栓、铆钉等）连接 …… 183
7.3　组合工字梁翼缘连接 …… 186
7.4　梁与柱的刚性连接 …… 186
7.5　连接节点处板件的计算 …… 188
7.6　支座 …… 189
8　构造要求 …… 191
8.1　一般规定 …… 191
8.2　焊缝连接 …… 191
8.3　螺栓连接和铆钉连接 …… 193
8.4　结构构件 …… 194
8.5　对吊车梁和吊车桁架（或类似结构）的要求 …… 196

8.6 大跨度屋盖结构 …… 198
8.7 提高寒冷地区结构抗脆断能力的要求 …… 198
8.8 制作、运输和安装 …… 199
8.9 防护和隔热 …… 199
9 塑性设计 …… 200
9.1 一般规定 …… 200
9.2 构件的计算 …… 200
9.3 容许长细比和构造要求 …… 201
10 钢管结构 …… 203
10.1 一般规定 …… 203
10.2 构造要求 …… 204
10.3 杆件和节点承载力 …… 204
11 钢与混凝土组合梁 …… 211
11.1 一般规定 …… 211
11.2 组合梁设计 …… 212
11.3 抗剪连接件的计算 …… 214
11.4 挠度计算 …… 216
11.5 构造要求 …… 217
附录A 结构或构件的变形容许值 …… 219
附录B 梁的整体稳定系数 …… 221
附录C 轴心受压构件的稳定系数 …… 225
附录D 柱的计算长度系数 …… 230
附录E 疲劳计算的构件和连接分类 …… 241
附录F 桁架节点板在斜腹杆压力作用下的稳定计算 …… 244
本规范用词说明 …… 246

1 总　　则

1.0.1 为在钢结构设计中贯彻执行国家的技术经济政策，做到技术先进、经济合理、安全适用、确保质量，特制定本规范。

1.0.2 本规范适用于工业与民用房屋和一般构筑物的钢结构设计，其中，由冷弯成型钢材制作的构件及其连接应符合现行国家标准《冷弯薄壁型钢结构技术规范》GB 50018 的规定。

1.0.3 本规范的设计原则是根据现行国家标准《建筑结构可靠度设计统一标准》GB 50068 制订的。按本规范设计时，取用的荷载及其组合值应符合现行国家标准《建筑结构荷载规范》GB 50009 的规定；在地震区的建筑物和构筑物，尚应符合现行国家标准《建筑抗震设计规范》GB 50011、《中国地震动参数区划图》GB 18306 和《构筑物抗震设计规范》GB 50191 的规定。

1.0.4 设计钢结构时，应从工程实际情况出发，合理选用材料、结构方案和构造措施，满足结构构件在运输、安装和使用过程中的强度、稳定性和刚度要求，并符合防火、防腐蚀要求。宜优先采用通用的和标准化的结构和构件，减少制作、安装工作量。

1.0.5 在钢结构设计文件中，应注明建筑结构的设计使用年限、钢材牌号、连接材料的型号（或钢号）和对钢材所要求的力学性能、化学成分及其他的附加保证项目。此外，还应注明所要求的焊缝形式、焊缝质量等级、端面刨平顶紧部位及对施工的要求。

1.0.6 对有特殊设计要求和在特殊情况下的钢结构设计，尚应符合现行有关国家标准的要求。

2 术语和符号

2.1 术　　语

2.1.1 强度　strength

构件截面材料或连接抵抗破坏的能力。强度计算是防止结构构件或连接因材料强度被超过而破坏的计算。

2.1.2 承载能力　load-carrying capacity

结构或构件不会因强度、稳定或疲劳等因素破坏所能承受的最大内力；或塑性分析形成破坏机构时的最大内力；或达到不适应于继续承载的变形时的内力。

2.1.3 脆断　brittle fracture

一般指钢结构在拉应力状态下没有出现警示性的塑性变形而突然发生的脆性断裂。

2.1.4 强度标准值　characteristic value of strength

国家标准规定的钢材屈服点（屈服强度）或抗拉强度。

2.1.5 强度设计值　design value of strength

钢材或连接的强度标准值除以相应抗力分项系数后的数值。

2.1.6 一阶弹性分析　first order elastic analysis

不考虑结构二阶变形对内力产生的影响，根据未变形的结构建立平衡条件，按弹性阶段分析结构内力及位移。

2.1.7 二阶弹性分析　second order elastic analysis

考虑结构二阶变形对内力产生的影响，根据位移后的结构建立平衡条件，按弹性阶段分析结构内力及位移。

2.1.8 屈曲　buckling

杆件或板件在轴心压力、弯矩、剪力单独或共同作用下突然发生与原受力状态不符的较大变形而失去稳定。

2.1.9 腹板屈曲后强度　post-buckling strength of web plate

腹板屈曲后尚能继续保持承受荷载的能力。

2.1.10 通用高厚比　normalized web slenderness

参数，其值等于钢材受弯、受剪或受压屈服强度除以相应的腹板抗弯、抗剪或局部承压弹性屈曲应力之商的平方根。

2.1.11 整体稳定　overall stability

在外荷载作用下，对整个结构或构件能否发生屈曲或失稳的评估。

2.1.12 有效宽度　effective width

在进行截面强度和稳定性计算时，假定板件有效的那一部分宽度。

2.1.13 有效宽度系数　effective width factor

板件有效宽度与板件实际宽度的比值。

2.1.14 计算长度　effective length

构件在其有效约束点间的几何长度乘以考虑杆端变形情况和所受荷载情况的系数而得的等效长度，用以计算构件的长细比。计算焊缝连接强度时采用的焊缝长度。

2.1.15 长细比 slenderness ratio

构件计算长度与构件截面回转半径的比值。

2.1.16 换算长细比 equivalent slenderness ratio

在轴心受压构件的整体稳定计算中，按临界力相等的原则，将格构式构件换算为实腹构件进行计算时所对应的长细比或将弯扭与扭转失稳换算为弯曲失稳时采用的长细比。

2.1.17 支撑力 nodal bracing force

为减小受压构件（或构件的受压翼缘）的自由长度所设置的侧向支承处，在被支撑构件（或构件受压翼缘）的屈曲方向，所需施加于该构件（或构件受压翼缘）截面剪心的侧向力。

2.1.18 无支撑纯框架 unbraced frame

依靠构件及节点连接的抗弯能力，抵抗侧向荷载的框架。

2.1.19 强支撑框架 frame braced with strong bracing system

在支撑框架中，支撑结构（支撑桁架、剪力墙、电梯井等）抗侧移刚度较大，可将该框架视为无侧移的框架。

2.1.20 弱支撑框架 frame braced with weak bracing system

在支撑框架中，支撑结构抗侧移刚度较弱，不能将该框架视为无侧移的框架。

2.1.21 摇摆柱 leaning column

框架内两端为铰接不能抵抗侧向荷载的柱。

2.1.22 柱腹板节点域 panel zone of column web

框架梁柱的刚接节点处，柱腹板在梁高度范围内的区域。

2.1.23 球形钢支座 spherical steel bearing

使结构在支座处可以沿任意方向转动的钢球面作为传力的铰接支座或可移动支座。

2.1.24 橡胶支座 composite rubber and steel support

满足支座位移要求的橡胶和薄钢板等复合材料制品作为传递支座反力的支座。

2.1.25 主管 chord member

钢管结构构件中，在节点处连续贯通的管件，如桁架中的弦杆。

2.1.26 支管 bracing member

钢管结构中，在节点处断开并与主管相连的管件，如桁架中与主管相连的腹杆。

2.1.27 间隙节点 gap joint

两支管的趾部离开一定距离的管节点。

2.1.28 搭接节点 overlap joint

在钢管节点处，两支管相互搭接的节点。

2.1.29 平面管节点 uniplanar joint

支管与主管在同一平面内相互连接的节点。

2.1.30 空间管节点 multiplanar joint

在不同平面内的支管与主管相接而形成的管节点。

2.1.31 组合构件 built-up member

由一块以上的钢板（或型钢）相互连接组成的构件，如工字形截面或箱形截面组合梁或柱。

2.1.32 钢与混凝土组合梁 composite steel and concrete beam

由混凝土翼板与钢梁通过抗剪连接件组合而成能整体受力的梁。

2.2 符　　号

2.2.1 作用和作用效应设计值

F——集中荷载；

H——水平力；

M——弯矩；

N——轴心力；

P——高强度螺栓的预拉力；

Q——重力荷载；

R——支座反力；

V——剪力。

2.2.2 计算指标

E——钢材的弹性模量；

E_c——混凝土的弹性模量；

G——钢材的剪变模量；

N_t^a——一个锚栓的抗拉承载力设计值；

N_t^b、N_v^b、N_c^b——一个螺栓的抗拉、抗剪和承压承载力设计值；

N_t^r、N_v^r、N_c^r——一个铆钉的抗拉、抗剪和承压承载力设计值；

N_v^c——组合结构中一个抗剪连接件的抗剪承载力设计值；

N_t^{pj}、N_c^{pj}——受拉和受压支管在管节点处的承载力设计值；

S_b——支撑结构的侧移刚度（产生单位侧倾角的水平力）；

f——钢材的抗拉、抗压和抗弯强度设计值；

f_v——钢材的抗剪强度设计值；

f_{ce}——钢材的端面承压强度设计值；

f_{st}——钢筋的抗拉强度设计值；

f_y——钢材的屈服强度（或屈服点）；

f_t^a——锚栓的抗拉强度设计值；

f_t^b、f_v^b、f_c^b——螺栓的抗拉、抗剪和承压强度设计值；

f_t^r、f_v^r、f_c^r——铆钉的抗拉、抗剪和承压强度设计值；

f_t^w、f_v^w、f_c^w——对接焊缝的抗拉、抗剪和抗压强度设计值；

f_f^w——角焊缝的抗拉、抗剪和抗压强度设计值；

f_c——混凝土抗压强度设计值；

Δu——楼层的层间位移；

$[v_Q]$——仅考虑可变荷载标准值产生的挠度的容许值；

$[v_T]$——同时考虑永久和可变荷载标准值产生的挠度的容许值；

σ——正应力；

σ_c——局部压应力；

σ_f——垂直于角焊缝长度方向，按焊缝有效截面计算的应力；

$\Delta\sigma$——疲劳计算的应力幅或折算应力幅；

$\Delta\sigma_e$——变幅疲劳的等效应力幅；

$[\Delta\sigma]$——疲劳容许应力幅；

σ_{cr}、$\sigma_{c,cr}$、τ_{cr}——板件在弯曲应力、局部压应力和剪应力单独作用时的临界应力；

τ——剪应力；

τ_f——沿角焊缝长度方向，按焊缝有效截面计算的剪应力；

ρ——质量密度。

2.2.3 几何参数

A——毛截面面积；

A_n——净截面面积；

H——柱的高度；

H_1、H_2、H_3——阶形柱上段、中段（或单阶柱下段）、下段的高度；

I——毛截面惯性矩；

I_t——毛截面抗扭惯性矩；

I_ω——毛截面扇性惯性矩；

I_n——净截面惯性矩；

S——毛截面面积矩；

W——毛截面模量；

W_n——净截面模量；

W_P——塑性毛截面模量；

W_{Pn}——塑性净截面模量；

a、g——间距；间隙；

b——板的宽度或板的自由外伸宽度；

b_0——箱形截面翼缘板在腹板之间的无支承宽度；混凝土板托顶部的宽度；

b_s——加劲肋的外伸宽度；

b_e——板件的有效宽度；

d——直径；

d_e——有效直径；

d_0——孔径；

e——偏心距；

h——截面全高；楼层高度；

h_{cl}——混凝土板的厚度；

h_{c2}——混凝土板托的厚度；

h_e——角焊缝的计算厚度；

h_f——角焊缝的焊脚尺寸；

h_w——腹板的高度。

h_0——腹板的计算高度；

i——截面回转半径；

l——长度或跨度；

l_1——梁受压翼缘侧向支承间距离；螺栓（或铆钉）受力方向的连接长度；

l_0——弯曲屈曲的计算长度；

l_ω——扭转屈曲的计算长度；

l_w——焊缝的计算长度；

l_z——集中荷载在腹板计算高度边缘上的假定分布长度；

s——部分焊透对接焊缝坡口根部至焊缝表面的最短距离；

t——板的厚度；主管壁厚；

t_s——加劲肋厚度；

t_w——腹板的厚度；

α——夹角；

θ——夹角；应力扩散角；

λ_b——梁腹板受弯计算时的通用高厚比；

λ_s——梁腹板受剪计算时的通用高厚比；

λ_c——梁腹板受局部压力计算时的通用高厚比；

λ——长细比；

λ_0、λ_{yz}、λ_z、λ_{uz}——换算长细比。

2.2.4 计算系数及其他

C——用于疲劳计算的有量纲参数；

K_1、K_2——构件线刚度之比；

k_s——构件受剪屈曲系数；

O_v——管节点的支管搭接率；

n——螺栓、铆钉或连接件数目；应力循环次数；

n_1——所计算截面上的螺栓（或铆钉）数目；

n_f——高强度螺栓的传力摩擦面数目；

n_v——螺栓或铆钉的剪切面数目；

α——线膨胀系数；计算吊车摆动引起的横向力的系数；

α_E——钢材与混凝土弹性模量之比；

α_e——梁截面模量考虑腹板有效宽度的折减系数；

α_f——疲劳计算的欠载效应等效系数；

α_0——柱腹板的应力分布不均匀系数；

α_y——钢材强度影响系数；

α_1——梁腹板刨平顶紧时采用的系数；

α_{2i}——考虑二阶效应框架第 i 层杆件的侧移弯矩增大系数；

β——支管与主管外径之比；用于计算疲劳强度的参数；

β_b——梁整体稳定的等效临界弯矩系数；

β_f——正面角焊缝的强度设计值增大系数；

β_m、β_t——压弯构件稳定的等效弯矩系数；

β_1——折算应力的强度设计值增大系数；

γ——栓钉钢材强屈比；

γ_0——结构的重要性系数；

γ_x、γ_y——对主轴 x、y 的截面塑性发展系数；

η——调整系数；

η_b——梁截面不对称影响系数；

η_1、η_2——用于计算阶形柱计算长度的参数；

μ——高度强螺栓摩擦面的抗滑移系数；柱的计算长度系数；

μ_1、μ_2、μ_3——阶形柱上段、中段（或单阶柱下段）、下段的计算长度系数；

ξ——用于计算梁整体稳定的参数；

ρ——腹板受压区有效宽度系数；

φ——轴心受压构件的稳定系数；

φ_b、φ'_b——梁的整体稳定系数；

ψ——集中荷载的增大系数；

ψ_n、ψ_a、ψ_d——用于计算直接焊接钢管节点承载力的参数。

3 基本设计规定

3.1 设计原则

3.1.1 本规范除疲劳计算外，采用以概率理论为基础的极限状态设计方法，用分项系数设计表达式进行计算。

3.1.2 承重结构应按下列承载能力极限状态和正常使用极限状态进行设计：

1 承载能力极限状态包括：构件和连接的强度破坏、疲劳破坏和因过度变形而不适于继续承载，结构和构件丧失稳定，结构转变为机动体系和结构倾覆。

2 正常使用极限状态包括：影响结构、构件和非结构构件正常使用或外观的变形，影响正常使用的振动，影响正常使用或耐久性能的局部损坏（包括混凝土裂缝）。

3.1.3 设计钢结构时，应根据结构破坏可能产生的后果，采用不同的安全等级。

一般工业与民用建筑钢结构的安全等级应取为二级，其他特殊建筑钢结构的安全等级应根据具体情况另行确定。

3.1.4 按承载能力极限状态设计钢结构时，应考虑荷载效应的基本组合，必要时尚应考虑荷载效应的偶然组合。

按正常使用极限状态设计钢结构时，应考虑荷载效应的标准组合，对钢与混凝土组合梁，尚应考虑准永久组合。

3.1.5 计算结构或构件的强度、稳定性以及连接的强度时，应采用荷载设计值（荷载标准值乘以荷载分项系数）；计算疲劳时，应采用荷载标准值。

3.1.6 对于直接承受动力荷载的结构：在计算强度和稳定性时，动力荷载设计值应乘动力系数；在计算疲劳和变形时，动力荷载标准值不乘动力系数。

计算吊车梁或吊车桁架及其制动结构的疲劳和挠度时，吊车荷载应按作用在跨间内荷载效应最大的一台吊车确定。

3.2 荷载和荷载效应计算

3.2.1 设计钢结构时，荷载的标准值、荷载分项系数、荷载组合值系数、动力荷载的动力系数等，应按现行国家标准《建筑结构荷载规范》GB 50009 的规定采用。

结构的重要性系数 γ_0 应按现行国家标准《建筑结构可靠度设计统一标准》GB 50068 的规定采用，其中对设计使用年限为 25 年的结构构件，γ_0 不应小于 0.95。

注：对支承轻屋面的构件或结构（檩条、屋架、框架等），当仅有一个可变荷载且受荷水平投影面积超过 60m² 时，屋面均布活荷载标准值应取为 0.3kN/m²。

3.2.2 计算重级工作制吊车梁（或吊车桁架）及其制动结构的强度、稳定性以及连接（吊车梁或吊车桁架、制动结构、柱相互间的连接）的强度时，应考虑由吊车摆动引起的横向水平力（此水平力不与荷载规范规定的横向水平荷载同时考虑），作用于每个轮压处的此水平力标准值可由下式进行计算：

$$H_k = \alpha P_{k,max} \tag{3.2.2}$$

式中 $P_{k,max}$——吊车最大轮压标准值；

α——系数，对一般软钩吊车 $\alpha=0.1$，抓斗或磁盘吊车宜采用 $\alpha=0.15$，硬钩吊车宜采用 $\alpha=0.2$。

注：现行国家标准《起重机设计规范》GB/T3811 将吊车工作级别划分为 A1～A8 级。在一般情况下，本规范中的轻级工作制相当于 A1～A3 级；中级工作制相当于 A4、A5 级；重级工作制相当于 A6～A8 级，其中 A8 属于特重级。

3.2.3 计算屋盖桁架考虑悬挂吊车和电动葫芦的荷载时，在同一跨间每条运行线路上的台数：对梁式吊车不宜多于 2 台；对电动葫芦不宜多于 1 台。

3.2.4 计算冶炼车间或其他类似车间的工作平台结构时，由检修材料所产生的荷载，可乘以下列折减系数：

主梁： 0.85；

柱（包括基础）： 0.75。

3.2.5 结构的计算模型和基本假定应尽量与构件连接的实际性能相符合。

3.2.6 建筑结构的内力一般按结构静力学方法进行弹性分析，符合本规范第 9 章的超静定结构，可采用塑性分析。采用弹性分析的结构中，构件截面允许有塑性变形发展。

3.2.7 框架结构中，梁与柱的刚性连接应符合受力过程中梁柱间交角不变的假定，同时连接应具有充分的强度承受交汇构件端部传递的所有最不利内力。梁与柱铰接时，应使连接具有充分的转动能力，且能有效地传递横向剪力与轴心力。梁与柱的半刚性连接只具有有限的转动刚度，在承受弯矩的同时会产生相应的交角变化，在内力分析时，必须预先确定连接的弯矩-转角特性曲线，以便考虑连接变形的影响。

3.2.8 框架结构内力分析宜符合下列规定：

1 框架结构可采用一阶弹性分析。

2 对 $\frac{\sum N\cdot\Delta u}{\sum H\cdot h}>0.1$ 的框架结构宜采用二阶弹性分析，此时应在每层柱顶附加考虑由公式（3.2.8-1）计算的假想水平力 H_{ni}。

$$H_{ni}=\frac{\alpha_y Q_i}{250}\sqrt{0.2+\frac{1}{n_s}} \tag{3.2.8-1}$$

式中 Q_i——第 i 楼层的总重力荷载设计值；

n_s——框架总层数；当 $\sqrt{0.2+1/n_s}>1$ 时，取此根号值为 1.0；

α_y——钢材强度影响系数，其值：Q235 钢为 1.0；Q345 钢为 1.1；Q390 钢为 1.2；Q420 钢为 1.25。

对无支撑的纯框架结构，当采用二阶弹性分析时，各杆件杆端的弯矩 $M_{\text{Ⅱ}}$ 可用下列近似公式进行计算：

$$M_{\text{Ⅱ}}=M_{\text{Ⅰb}}+\alpha_{2i}M_{\text{Ⅰs}} \tag{3.2.8-2}$$

$$\alpha_{2i}=\frac{1}{1-\frac{\sum N\cdot\Delta u}{\sum H\cdot h}} \tag{3.2.8-3}$$

式中 $M_{\text{Ⅰb}}$——假定框架无侧移时按一阶弹性分析求得的各杆件端弯矩；

$M_{\text{Ⅰs}}$——框架各节点侧移时按一阶弹性分析求得的杆件端弯矩；

α_{2i}——考虑二阶效应第 i 层杆件的侧移弯矩增大系数；

$\sum N$——所计算楼层各柱轴心压力设计值之和；

$\sum H$——产生层间侧移 Δu 的所计算楼层及以上各层的水平力之和；

Δu——按一阶弹性分析求得的所计算楼层的层间侧移，当确定是否采用二阶弹性分析时，Δu 可近似采用层间相对位移的容许值 $[\Delta u]$，$[\Delta u]$ 见本规范附录 A 第 A.2 节；

h——所计算楼层的高度。

注：1 当按公式（3.2.8-3）计算的 $\alpha_{2i}>1.33$ 时，宜增大框架结构的刚度。

2 本条规定不适用于山形门式刚架或其他类似的结构以及按本规范第 9 章进行塑性设计的框架结构。

3.3 材 料 选 用

3.3.1 为保证承重结构的承载能力和防止在一定条件下出现脆性破坏，应根据结构的重要性、荷载特征、结构形式、应力状态、连接方法、钢材厚度和工作环境等因素综合考虑，选用合适的钢材牌号和材性。

承重结构的钢材宜采用 Q235 钢、Q345 钢、Q390 钢和 Q420 钢，其质量应分别符合现行国家标准《碳素结构钢》GB/T700 和《低合金高强度结构钢》GB/T1591 的规定。当采用其他牌号的钢材时，尚应符合相应有关标准的规定和要求。

3.3.2 下列情况的承重结构和构件不应采用 Q235 沸腾钢：

1 焊接结构。

1） 直接承受动力荷载或振动荷载且需要验算疲劳的结构。

2） 工作温度低于 −20℃ 时的直接承受动力荷载或振动荷载但可不验算疲劳的结构以及承受静力荷载的受弯及受拉的重要承重结构。

3） 工作温度等于或低于 −30℃ 的所有承重结构。

2 非焊接结构。工作温度等于或低于 −20℃ 的直接承受动力荷载且需要验算疲劳的结构。

3.3.3 承重结构采用的钢材应具有抗拉强度、伸长率、屈服强度和硫、磷含量的合格保证，对焊接结构尚应具有碳含量的合格保证。

焊接承重结构以及重要的非焊接承重结构采用的钢材还应具有冷弯试验的合格保证。

3.3.4 对于需要验算疲劳的焊接结构的钢材，应具有常温冲击韧性的合格保证。当结构工作温度不高于 0℃ 但高于 −20℃ 时，Q235 钢和 Q345 钢应具有 0℃ 冲击韧性的合格保证；对 Q390 钢和 Q420 钢应具有 −20℃ 冲击韧性的合格保证。当结构工作温度不高于 −20℃ 时，对 Q235 钢和 Q345 钢应具有 −20℃ 冲击韧性的合格保证；对 Q390 钢和 Q420 钢应具有 −40℃ 冲击韧性的合格保证。

对于需要验算疲劳的非焊接结构的钢材亦应具有常温冲击韧性的合格保证。当结构工作温度不高于 −20℃ 时，对 Q235 钢和 Q345 钢应具有 0℃ 冲击韧性的合格保证；对 Q390 钢和 Q420 钢应具有 −20℃ 冲击韧性的合格保证。

注：吊车起重量不小于 50t 的中级工作制吊车梁，对钢材冲击韧性的要求应与需要验算疲劳的构件相同。

3.3.5 钢铸件采用的铸钢材质应符合现行国家标准《一般工程用铸造碳钢件》GB/T11352 的规定。

3.3.6 当焊接承重结构为防止钢材的层状撕裂而采用 Z 向钢时，其材质应符合现行国家标准《厚度方向性能钢板》GB/T 5313 的规定。

3.3.7 对处于外露环境，且对耐腐蚀有特殊要求的或在腐蚀性气态和固态介质作用下的承重结构，宜采用耐候钢，其质量要求应符合现行国家标准《焊接结构用耐候钢》GB/T4172 的规定。

3.3.8 钢结构的连接材料应符合下列要求：

1 手工焊接采用的焊条，应符合现行国家标准《碳钢焊条》GB/T5117 或《低合金钢焊条》GB/T5118 的规定。选择的焊条型号应与主体金属力学性能相适应。对直接承受动力荷载或振动荷载且需要验算疲劳的结构，宜采用低氢型焊条。

2 自动焊接或半自动焊接采用的焊丝和相应的焊剂应与主体金属力学性能相适应，并应符合现行国家标准的规定。

3 普通螺栓应符合现行国家标准《六角头螺栓　C 级》GB/T 5780 和《六角头螺栓》GB/T 5782 的规定。

4 高强度螺栓应符合现行国家标准《钢结构用高强度大六角头螺栓》GB/T 1228、《钢结构用高强度大六角螺母》GB/T 1229、《钢结构用高强度垫圈》GB/T 1230、《钢结构用高强度大六角头螺栓、大六角螺母、垫圈技术条件》GB/T 1231 或《钢结构用扭剪型高强度螺栓连接副》GB/T 3632、《钢结构用扭剪型高强度螺栓连接副　技术条件》GB/T 3633的规定。

5 圆柱头焊钉（栓钉）连接件的材料应符合现行国家标准电弧螺栓焊用《圆柱头焊钉》GB/T10433 的规定。

6 铆钉应采用现行国家标准《标准件用碳素钢热轧圆钢》GB/T 715 中规定的 BL2 或 BL3 号钢制成。

7 锚栓可采用现行国家标准《碳素结构钢》GB/T 700 中规定的 Q235 钢或《低合金高强度结构钢》GB/T 1591 中规定的 Q345 钢制成。

3.4 设 计 指 标

3.4.1 钢材的强度设计值，应根据钢材厚度或直径按表 3.4.1-1 采用。钢铸件的强度设计值应按表 3.4.1-2 采用。连接的强度设计值应按表 3.4.1-3 至表 3.4.1-5 采用。

表 3.4.1-1 钢材的强度设计值（N/mm²）

钢　材		抗拉、抗压和抗弯 f	抗　剪 f_v	端面承压（刨平顶紧） f_{ce}
牌　号	厚度或直径（mm）			
Q235 钢	≤16	215	125	325
	>16～40	205	120	
	>40～60	200	115	
	>60～100	190	110	

续表 3.4.1-1

钢材		抗拉、抗压和抗弯 f	抗剪 f_v	端面承压（刨平顶紧） f_{ce}
牌号	厚度或直径（mm）			
Q345 钢	≤16	310	180	400
	>16～35	295	170	
	>35～50	265	155	
	>50～100	250	145	
Q390 钢	≤16	350	205	415
	>16～35	335	190	
	>35～50	315	180	
	>50～100	295	170	
Q420 钢	≤16	380	220	440
	>16～35	360	210	
	>35～50	340	195	
	>50～100	325	185	

注：表中厚度系指计算点的钢材厚度，对轴心受拉和轴心受压构件系指截面中较厚板件的厚度。

表 3.4.1-2　钢铸件的强度设计值（N/mm^2）

钢号	抗拉、抗压和抗弯 f	抗剪 f_v	端面承压（刨平顶紧） f_{ce}
ZG200-400	155	90	260
ZG230-450	180	105	290
ZG270-500	210	120	325
ZG310-570	240	140	370

表 3.4.1-3　焊缝的强度设计值（N/mm^2）

焊接方法和焊条型号	构件钢材		对接焊缝				角焊缝
	牌号	厚度或直径（mm）	抗压 f_c^w	焊缝质量为下列等级时，抗拉 f_t^w		抗剪 f_v^w	抗拉、抗压和抗剪 f_f^w
				一级、二级	三级		
自动焊、半自动焊和E43型焊条的手工焊	Q235 钢	≤16	215	215	185	125	160
		>16～40	205	205	175	120	
		>40～60	200	200	170	115	
		>60～100	190	190	160	110	
自动焊、半自动焊和E50型焊条的手工焊	Q345 钢	≤16	310	310	265	180	200
		>16～35	295	295	250	170	
		>35～50	265	265	225	155	
		>50～100	250	250	210	145	

续表 3.4.1-3

焊接方法和焊条型号	构件钢材		对接焊缝				角焊缝
	牌号	厚度或直径(mm)	抗压 f_c^w	焊缝质量为下列等级时，抗拉 f_t^w		抗剪 f_v^w	抗拉、抗压和抗剪 f_f^w
				一级、二级	三级		
自动焊、半自动焊和E55型焊条的手工焊	Q390钢	≤16	350	350	300	205	220
		>16～35	335	335	285	190	
		>35～50	315	315	270	180	
		>50～100	295	295	250	170	
	Q420钢	≤16	380	380	320	220	220
		>16～35	360	360	305	210	
		>35～50	340	340	290	195	
		>50～100	325	325	275	185	

注：1 自动焊和半自动焊所采用的焊丝和焊剂，应保证其熔敷金属的力学性能不低于现行国家标准《埋弧焊用碳钢焊丝和焊剂》GB/T 5293 和《低合金钢埋弧焊用焊剂》GB/T 12470 中相关的规定。

2 焊缝质量等级应符合现行国家标准《钢结构工程施工质量验收规范》GB 50205 的规定。其中厚度小于8mm 钢材的对接焊缝，不应采用超声波探伤确定焊缝质量等级。

3 对接焊缝在受压区的抗弯强度设计值取 f_c^w，在受拉区的抗弯强度设计值取 f_t^w。

4 表中厚度系指计算点的钢材厚度，对轴心受拉和轴心受压构件系指截面中较厚板件的厚度。

表 3.4.1-4 螺栓连接的强度设计值（N/mm^2）

螺栓的性能等级、锚栓和构件钢材的牌号		普通螺栓						锚栓	承压型连接高强度螺栓		
		C级螺栓			A级、B级螺栓						
		抗拉 f_t^b	抗剪 f_v^b	承压 f_c^b	抗拉 f_t^b	抗剪 f_v^b	承压 f_c^b	抗拉 f_t^a	抗拉 f_t^b	抗剪 f_v^b	承压 f_c^b
普通螺栓	4.6级、4.8级	170	140	—	—	—	—	—	—	—	—
	5.6级	—	—	—	210	190	—	—	—	—	—
	8.8级	—	—	—	400	320	—	—	—	—	—
锚栓	Q235钢	—	—	—	—	—	—	140	—	—	—
	Q345钢	—	—	—	—	—	—	180	—	—	—
承压型连接高强度螺栓	8.8级	—	—	—	—	—	—	—	400	250	—
	10.9级	—	—	—	—	—	—	—	500	310	—
构件	Q235钢	—	—	305	—	—	405	—	—	—	470
	Q345钢	—	—	385	—	—	510	—	—	—	590
	Q390钢	—	—	400	—	—	530	—	—	—	615
	Q420钢	—	—	425	—	—	560	—	—	—	655

注：1 A级螺栓用于 $d \leqslant 24mm$ 和 $l \leqslant 10d$ 或 $l \leqslant 150mm$（按较小值）的螺栓；B级螺栓用于 $d > 24mm$ 或 $l > 10d$ 或 $l > 150mm$（按较小值）的螺栓。d 为公称直径，l 为螺杆公称长度。

2 A、B级螺栓孔的精度和孔壁表面粗糙度，C级螺栓孔的允许偏差和孔壁表面粗糙度，均应符合现行国家标准《钢结构工程施工质量验收规范》GB 50205 的要求。

表 3.4.1-5 铆钉连接的强度设计值（N/mm²）

铆钉钢号和构件钢材牌号		抗拉（钉头拉脱） f_t^r	抗剪 f_v^r		承压 f_c^r	
			Ⅰ类孔	Ⅱ类孔	Ⅰ类孔	Ⅱ类孔
铆钉	BL2 或 BL3	120	185	155	—	—
构件	Q235 钢	—	—	—	450	365
	Q345 钢	—	—	—	565	460
	Q390 钢	—	—	—	590	480

注：1 属于下列情况者为Ⅰ类孔：

1）在装配好的构件上按设计孔径钻成的孔；

2）在单个零件和构件上按设计孔径分别用钻模钻成的孔；

3）在单个零件上先钻成或冲成较小的孔径，然后在装配好的构件上再扩钻至设计孔径的孔。

2 在单个零件上一次冲成或不用钻模钻成设计孔径的孔属于Ⅱ类孔。

3.4.2 计算下列情况的结构构件或连接时，第 3.4.1 条规定的强度设计值应乘以相应的折减系数。

1 单面连接的单角钢：

1）按轴心受力计算强度和连接乘以系数 0.85；

2）按轴心受压计算稳定性：

等边角钢乘以系数 $0.6+0.0015\lambda$，但不大于 1.0；

短边相连的不等边角钢乘以系数 $0.5+0.0025\lambda$，但不大于 1.0；

长边相连的不等边角钢乘以系数 0.70；

λ 为长细比，对中间无联系的单角钢压杆，应按最小回转半径计算，当 $\lambda<20$ 时，取 $\lambda=20$；

2 无垫板的单面施焊对接焊缝乘以系数 0.85；

3 施工条件较差的高空安装焊缝和铆钉连接乘以系数 0.90；

4 沉头和半沉头铆钉连接乘以系数 0.80。

注：当几种情况同时存在时，其折减系数应连乘。

3.4.3 钢材和钢铸件的物理性能指标应按表 3.4.3 采用。

表 3.4.3 钢材和钢铸件的物理性能指标

弹性模量 E (N/mm²)	剪变模量 G (N/mm²)	线膨胀系数 α (以每℃计)	质量密度 ρ (kg/m³)
206×10^3	79×10^3	12×10^{-6}	7850

3.5 结构或构件变形的规定

3.5.1 为了不影响结构或构件的正常使用和观感，设计时应对结构或构件的变形（挠度或侧移）规定相应的限值。一般情况下，结构或构件变形的容许值见本规范附录 A 的规定。当有实践经验或有特殊要求时，可根据不影响正常使用和观感的原则对附录 A 的规定进行适当地调整。

3.5.2 计算结构或构件的变形时，可不考虑螺栓（或铆钉）孔引起的截面削弱。

3.5.3 为改善外观和使用条件，可将横向受力构件预先起拱，起拱大小应视实际需要而定，一般为恒载标准值加 1/2 活载标准值所产生的挠度值。当仅为改善外观条件时，构件挠度应取在恒荷载和活荷载标准值作用下的挠度计算值减去起拱度。

4 受弯构件的计算

4.1 强　　度

4.1.1 在主平面内受弯的实腹构件（考虑腹板屈曲后强度者参见本规范第4.4.1条），其抗弯强度应按下列规定计算：

$$\frac{M_x}{\gamma_x W_{nx}} + \frac{M_y}{\gamma_y W_{ny}} \leqslant f \tag{4.1.1}$$

式中　M_x、M_y——同一截面处绕x轴和y轴的弯矩（对工字形截面：x轴为强轴，y轴为弱轴）；

W_{nx}、W_{ny}——对x轴和y轴的净截面模量；

γ_x、γ_y——截面塑性发展系数；对工字形截面，$\gamma_x=1.05$，$\gamma_y=1.20$；对箱形截面，$\gamma_x=\gamma_y=1.05$；对其他截面，可按表5.2.1采用；

f——钢材的抗弯强度设计值。

当梁受压翼缘的自由外伸宽度与其厚度之比大于$13\sqrt{235/f_y}$而不超过$15\sqrt{235/f_y}$时，应取$\gamma_x=1.0$。f_y为钢材牌号所指屈服点。

对需要计算疲劳的梁，宜取$\gamma_x=\gamma_y=1.0$。

4.1.2 在主平面内受弯的实腹构件（考虑腹板屈曲后强度者参见本规范第4.4.1条），其抗剪强度应按下式计算：

$$\tau = \frac{VS}{It_w} \leqslant f_v \tag{4.1.2}$$

式中　V——计算截面沿腹板平面作用的剪力；

S——计算剪应力处以上毛截面对中和轴的面积矩；

I——毛截面惯性矩；

t_w——腹板厚度；

f_v——钢材的抗剪强度设计值。

4.1.3 当梁上翼缘受有沿腹板平面作用的集中荷载、且该荷载处又未设置支承加劲肋时，腹板计算高度上边缘的局部承压强度应按下式计算：

$$\sigma_c = \frac{\psi F}{t_w l_z} \leqslant f \tag{4.1.3-1}$$

式中　F——集中荷载，对动力荷载应考虑动力系数；

ψ——集中荷载增大系数；对重级工作制吊车梁，$\psi=1.35$；对其他梁，$\psi=1.0$；

l_z——集中荷载在腹板计算高度上边缘的假定分布长度，按下式计算：

$$l_z = a + 5h_y + 2h_R \tag{4.1.3-2}$$

a——集中荷载沿梁跨度方向的支承长度，对钢轨上的轮压可取50mm；

h_y——自梁顶面至腹板计算高度上边缘的距离；

h_R——轨道的高度，对梁顶无轨道的梁 $h_R=0$；

f——钢材的抗压强度设计值。

在梁的支座处，当不设置支承加劲肋时，也应按公式（4.1.3-1）计算腹板计算高度下边缘的局部压应力，但 ψ 取 1.0。支座集中反力的假定分布长度，应根据支座具体尺寸参照公式（4.1.3-2）计算。

注：腹板的计算高度 h_0：对轧制型钢梁，为腹板与上、下翼缘相接处两内弧起点间的距离；对焊接组合梁，为腹板高度；对铆接（或高强度螺栓连接）组合梁，为上、下翼缘与腹板连接的铆钉（或高强度螺栓）线间最近距离（见图 4.3.2）。

4.1.4 在梁的腹板计算高度边缘处，若同时受有较大的正应力、剪应力和局部压应力，或同时受有较大的正应力和剪应力（如连续梁中部支座处或梁的翼缘截面改变处等）时，其折算应力应按下式计算：

$$\sqrt{\sigma^2+\sigma_c^2-\sigma\sigma_c+3\tau^2}\leqslant\beta_1 f \tag{4.1.4-1}$$

式中 σ、τ、σ_c——腹板计算高度边缘同一点上同时产生的正应力、剪应力和局部压应力，τ 和 σ_c 应按公式（4.1.2）和公式（4.1.3-1）计算，σ 应按下式计算：

$$\sigma=\frac{M}{I_n}y_1 \tag{4.1.4-2}$$

σ 和 σ_c 以拉应力为正值，压应力为负值；

I_n——梁净截面惯性矩；

y_1——所计算点至梁中和轴的距离；

β_1——计算折算应力的强度设计值增大系数；当 σ 与 σ_c 异号时，取 $\beta_1=1.2$；当 σ 与 σ_c 同号或 $\sigma_c=0$ 时，取 $\beta_1=1.1$。

4.2 整 体 稳 定

4.2.1 符合下列情况之一时，可不计算梁的整体稳定性：

1 有铺板（各种钢筋混凝土板和钢板）密铺在梁的受压翼缘上并与其牢固相连、能阻止梁受压翼缘的侧向位移时。

2 H 型钢或等截面工字形简支梁受压翼缘的自由长度 l_1 与其宽度 b_1 之比不超过表 4.2.1 所规定的数值时。

表 4.2.1 H 型钢或等截面工字形简支梁不需计算整体稳定性的最大 l_1/b_1 值

钢号	跨中无侧向支承点的梁		跨中受压翼缘有侧向支承点的梁，不论荷载作用于何处
	荷载作用在上翼缘	荷载作用在下翼缘	
Q235	13.0	20.0	16.0
Q345	10.5	16.5	13.0
Q390	10.0	15.5	12.5
Q420	9.5	15.0	12.0

注：其他钢号的梁不需计算整体稳定性的最大 l_1/b_1 值，应取 Q235 钢的数值乘以 $\sqrt{235/f_y}$。

对跨中无侧向支承点的梁，l_1 为其跨度；对跨中有侧向支承点的梁，l_1 为受压翼缘侧向支承点间的距离（梁的支座处视为有侧向支承）。

4.2.2 除 4.2.1 条所指情况外，在最大刚度主平面内受弯的构件，其整体稳定性应按下式计算：

$$\frac{M_x}{\varphi_b W_x} \leqslant f \tag{4.2.2}$$

式中 M_x——绕强轴作用的最大弯矩；

W_x——按受压纤维确定的梁毛截面模量；

φ_b——梁的整体稳定性系数，应按附录 B 确定。

4.2.3 除 4.2.1 条所指情况外，在两个主平面受弯的 H 型钢截面或工字形截面构件，其整体稳定性应按下式计算：

$$\frac{M_x}{\varphi_b W_x} + \frac{M_y}{\gamma_y W_y} \leqslant f \tag{4.2.3}$$

式中 W_x、W_y——按受压纤维确定的对 x 轴和对 y 轴毛截面模量；

φ_b——绕强轴弯曲所确定的梁整体稳定系数，见 4.2.2 条。

4.2.4 不符合 4.2.1 条 1 款情况的箱形截面简支梁，其截面尺寸（图 4.2.4）应满足 $h/b_0 \leqslant 6, l_1/b_0 \leqslant 95\ (235/f_y)$。

符合上述规定的箱形截面简支梁，可不计算整体稳定性。

4.2.5 梁的支座处，应采取构造措施，以防止梁端截面的扭转。

4.2.6 用作减小梁受压翼缘自由长度的侧向支撑，其支撑力应将梁的受压翼缘视为轴心压杆按 5.1.7 条计算。

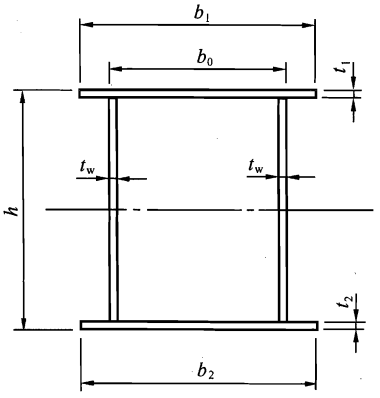

图 4.2.4 箱形截面

4.3 局 部 稳 定

4.3.1 承受静力荷载和间接承受动力荷载的组合梁宜考虑腹板屈曲后强度，按本规范第 4.4 节的规定计算其抗弯和抗剪承载力；而直接承受动力荷载的吊车梁及类似构件或其他不考虑屈曲后强度的组合梁，则应按本规范第 4.3.2 条的规定配置加劲肋。当 $h_0/t_w > 80\sqrt{235/f_y}$ 时，尚应按本规范第 4.3.3 条至第 4.3.5 条的规定计算腹板的稳定性。

轻、中级工作制吊车梁计算腹板的稳定性时，吊车轮压设计值可乘以折减系数 0.9。

4.3.2 组合梁腹板配置加劲肋应符合下列规定（图 4.3.2）：

1 当 $h_0/t_w \leqslant 80\sqrt{235/f_y}$ 时，对有局部压应力（$\sigma_c \neq 0$）的梁，应按构造配置横向加劲肋；但对无局部压应力（$\sigma_c = 0$）的梁，可不配置加劲肋。

2 当 $h_0/t_w > 80\sqrt{235/f_y}$ 时，应配置横向加劲肋。其中，当 $h_0/t_w > 170\sqrt{235/f_y}$（受压翼缘扭转受到约束，如连有刚性铺板、制动板或焊有钢轨时）或 $h_0/t_w > 150$

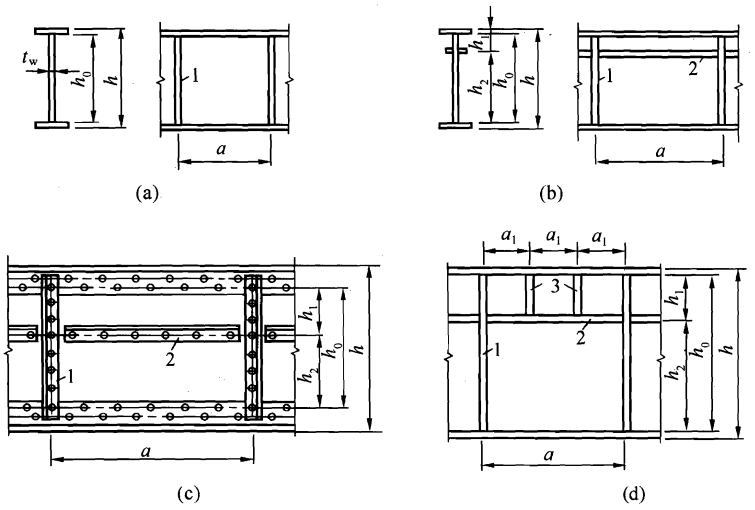

图 4.3.2　加劲肋布置

1—横向加劲肋；2—纵向加劲肋；3—短加劲肋

$\sqrt{235/f_y}$（受压翼缘扭转未受到约束时），或按计算需要时，应在弯曲应力较大区格的受压区增加配置纵向加劲肋。局部压应力很大的梁，必要时尚宜在受压区配置短加劲肋。

任何情况下，h_0/t_w 均不应超过 250。

此处 h_0 为腹板的计算高度（对单轴对称梁，当确定是否要配置纵向加劲肋时，h_0 应取腹板受压区高度 h_c 的 2 倍），t_w 为腹板的厚度。

3　梁的支座处和上翼缘受有较大固定集中荷载处，宜设置支承加劲肋。

4.3.3　仅配置横向加劲肋的腹板（图 4.3.2a），其各区格的局部稳定应按下式计算：

$$\left(\frac{\sigma}{\sigma_{cr}}\right)^2+\left(\frac{\tau}{\tau_{cr}}\right)^2+\frac{\sigma_c}{\sigma_{c,cr}}\leqslant 1 \qquad (4.3.3\text{-}1)$$

式中　σ——所计算腹板区格内，由平均弯矩产生的腹板计算高度边缘的弯曲压应力；

τ——所计算腹板区格内，由平均剪力产生的腹板平均剪应力，应按 $\tau=V/(h_w/t_w)$ 计算，h_w 为腹板高度；

σ_c——腹板计算高度边缘的局部压应力，应按公式（4.1.3-1）计算，但取式中的 $\psi=1.0$；

σ_{cr}、τ_{cr}、$\sigma_{c,cr}$——各种应力单独作用下的临界应力，按下列方法计算：

1）σ_{cr} 按下列公式计算：

当 $\lambda_b\leqslant 0.85$ 时：

$$\sigma_{cr}=f \qquad (4.3.3\text{-}2a)$$

当 $0.85<\lambda_b\leqslant 1.25$ 时：

$$\sigma_{cr}=[1-0.75(\lambda_b-0.85)]f \qquad (4.3.3\text{-}2b)$$

当 $\lambda_b>1.25$ 时：

$$\sigma_{cr}=1.1f/\lambda_b^2 \qquad (4.3.3\text{-}2c)$$

式中 λ_b——用于腹板受弯计算时的通用高厚比；

当梁受压翼缘扭转受到约束时：

$$\lambda_b = \frac{2h_c/t_w}{177}\sqrt{\frac{f_y}{235}} \tag{4.3.3-2d}$$

当梁受压翼缘扭转未受到约束时：

$$\lambda_b = \frac{2h_c/t_w}{153}\sqrt{\frac{f_y}{235}} \tag{4.3.3-2e}$$

h_c——梁腹板弯曲受压区高度，对双轴对称截面 $2h_c = h_0$。

2） τ_{cr}按下列公式计算：

当 $\lambda_s \leqslant 0.8$ 时：

$$\tau_{cr} = f_v \tag{4.3.3-3a}$$

当 $0.8 < \lambda_s \leqslant 1.2$ 时：

$$\tau_{cr} = [1 - 0.59(\lambda_s - 0.8)]f_v \tag{4.3.3-3b}$$

当 $\lambda_s > 1.2$ 时：

$$\tau_{cr} = 1.1f_v/\lambda_s^2 \tag{4.3.3-3c}$$

式中 λ_s——用于腹板受剪计算时的通用高厚比。

当 $a/h_0 \leqslant 1.0$ 时：

$$\lambda_s = \frac{h_0/t_w}{41\sqrt{4 + 5.34(h_0/a)^2}}\sqrt{\frac{f_y}{235}} \tag{4.3.3-3d}$$

当 $a/h_0 > 1.0$ 时：

$$\lambda_s = \frac{h_0/t_w}{41\sqrt{5.34 + 4(h_0/a)^2}}\sqrt{\frac{f_y}{235}} \tag{4.3.3-3e}$$

3） $\sigma_{c,cr}$按下列公式计算：

当 $\lambda_c \leqslant 0.9$ 时：

$$\sigma_{c,cr} = f \tag{4.3.3-4a}$$

当 $0.9 < \lambda_c \leqslant 1.2$ 时：

$$\sigma_{c,cr} = [1 - 0.79(\lambda_c - 0.9)]f \tag{4.3.3-4b}$$

当 $\lambda_c > 1.2$ 时：

$$\sigma_{c,cr} = 1.1f/\lambda_c^2 \tag{4.3.3-4c}$$

式中 λ_c——用于腹板受局部压力计算时的通用高厚比。

当 $0.5 \leqslant a/h_0 \leqslant 1.5$ 时：

$$\lambda_c = \frac{h_0/t_w}{28\sqrt{10.9 + 13.4(1.83 - a/h_0)^3}}\sqrt{\frac{f_y}{235}} \tag{4.3.3-4d}$$

当 $1.5 < a/h_0 \leqslant 2.0$ 时：

$$\lambda_c = \frac{h_0/t_w}{28\sqrt{18.9 - 5a/h_0}}\sqrt{\frac{f_y}{235}} \tag{4.3.3-4e}$$

4.3.4 同时用横向加劲肋和纵向加劲肋加强的腹板（图 4.3.2b、c），其局部稳定性应按下列公式计算：

1 受压翼缘与纵向加劲肋之间的区格：

$$\frac{\sigma}{\sigma_{cr1}}+\left(\frac{\tau}{\tau_{cr1}}\right)^2+\left(\frac{\sigma_c}{\sigma_{c,cr1}}\right)^2\leqslant 1.0 \tag{4.3.4-1}$$

式中 σ_{cr1}、τ_{cr1}、$\sigma_{c,cr1}$分别按下列方法计算：

1） σ_{cr1}按公式（4.3.3-2）计算，但式中的 λ_b 改用下列 λ_{b1}代替。

当梁受压翼缘扭转受到约束时：

$$\lambda_{b1}=\frac{h_1/t_w}{75}\sqrt{\frac{f_y}{235}} \tag{4.3.4-2a}$$

当梁受压翼缘扭转未受到约束时：

$$\lambda_{b1}=\frac{h_1/t_w}{64}\sqrt{\frac{f_y}{235}} \tag{4.3.4-2b}$$

式中 h_1——纵向加劲肋至腹板计算高度受压边缘的距离。

2） τ_{cr1}按公式（4.3.3-3）计算，将式中的 h_0 改为 h_1。

3） $\sigma_{c,cr1}$按公式（4.3.3-2）计算，但式中的 λ_b 改用下列 λ_{c1}代替。

当梁受压翼缘扭转受到约束时：

$$\lambda_{c1}=\frac{h_1/t_w}{56}\sqrt{\frac{f_y}{235}} \tag{4.3.4-3a}$$

当梁受压翼缘扭转未受到约束时：

$$\lambda_{c1}=\frac{h_1/t_w}{40}\sqrt{\frac{f_y}{235}} \tag{4.3.4-3b}$$

2 受拉翼缘与纵向加劲肋之间的区格：

$$\left(\frac{\sigma_2}{\sigma_{cr2}}\right)^2+\left(\frac{\tau}{\tau_{cr2}}\right)^2+\frac{\sigma_{c2}}{\sigma_{c,cr2}}\leqslant 1.0 \tag{4.3.4-4}$$

式中 σ_2——所计算区格内由平均弯矩产生的腹板在纵向加劲肋处的弯曲压应力；

σ_{c2}——腹板在纵向加劲肋处的横向压应力，取 $0.3\sigma_c$。

1） σ_{cr2}按公式（4.3.3-2）计算，但式中的 λ_b 改用下列 λ_{b2}代替。

$$\lambda_{b2}=\frac{h_2/t_w}{194}\sqrt{\frac{f_y}{235}} \tag{4.3.4-5}$$

2） τ_{cr2}按公式（4.3.3-3）计算，将式中的 h_0 改为 h_2（$h_2=h_0-h_1$）。

3） $\sigma_{c,cr2}$按公式(4.3.3-4)计算,但式中的 h_0 改为 h_2,当 $a/h_2>2$ 时,取 $a/h_2=2$。

4.3.5 在受压翼缘与纵向加劲肋之间设有短加劲肋的区格（图 4.3.2*d*），其局部稳定性按式（4.3.4-1）计算。该式中的 σ_{cr1}仍按 4.3.4 条 1 款之 1）计算；τ_{cr1}按式（4.3.3-3）计算，但将 h_0 和 a 改为h_1 和 a_1（a_1 为短加劲肋间距）；$\sigma_{c,cr1}$按式（4.3.3-2）计算，但式中 λ_b 改用下列 λ_{c1}代替。

当梁受压翼缘扭转受到约束时：

$$\lambda_{c1}=\frac{a_1/t_w}{87}\sqrt{\frac{f_y}{235}} \tag{4.3.5a}$$

当梁受压翼缘扭转未受到约束时：

$$\lambda_{c1}=\frac{a_1/t_w}{73}\sqrt{\frac{f_y}{235}} \tag{4.3.5b}$$

对 $a_1/h_1>1.2$ 的区格，公式（4.3.5）右侧应乘以 $1\Big/\left(0.4+0.5\frac{a_1}{h_1}\right)^{\frac{1}{2}}$。

4.3.6 加劲肋宜在腹板两侧成对配置，也可单侧配置，但支承加劲肋、重级工作制吊车梁的加劲肋不应单侧配置。

横向加劲肋的最小间距应为 $0.5h_0$，最大间距应为 $2h_0$（对无局部压应力的梁，当 $h_0/h_w\leqslant 100$ 时，可采用 $2.5h_0$）。纵向加劲肋至腹板计算高度受压边缘的距离应在 $h_c/2.5\sim h_c/2$ 范围内。

在腹板两侧成对配置的钢板横向加劲肋，其截面尺寸应符合下列公式要求：

外伸宽度：

$$b_s\geqslant\frac{h_0}{30}+40\quad(\text{mm}) \tag{4.3.6-1}$$

厚度：

$$t_s\geqslant\frac{b_s}{15} \tag{4.3.6-2}$$

在腹板一侧配置的钢板横向加劲肋，其外伸宽度应大于按公式（4.3.6-1）算得的1.2倍，厚度不应小于其外伸宽度的1/15。

在同时用横向加劲肋和纵向加劲肋加强的腹板中，横向加劲肋的截面尺寸除应符合上述规定外，其截面惯性矩 I_z 尚应符合下式要求：

$$I_z\geqslant 3h_0t_w^3 \tag{4.3.6-3}$$

纵向加劲肋的截面惯性矩 I_y，应符合下列公式要求：

当 $a/h_0\leqslant 0.85$ 时：

$$I_y\geqslant 1.5h_0t_w^3 \tag{4.3.6-4a}$$

当 $a/h_0>0.85$ 时：

$$I_y\geqslant\left(2.5-0.45\frac{a}{h_0}\right)\left(\frac{a}{h_0}\right)^2h_0t_w^3 \tag{4.3.6-4b}$$

短加劲肋的最小间距为 $0.75h_1$。短加劲肋外伸宽度应取横向加劲肋外伸宽度的0.7～1.0倍，厚度不应小于短加劲肋外伸宽度的1/15。

注：1 用型钢（H型钢、工字钢、槽钢、肢尖焊于腹板的角钢）做成的加劲肋，其截面惯性矩不得小于相应钢板加劲肋的惯性矩。

2 在腹板两侧成对配置的加劲肋，其截面惯性矩应按梁腹板中心线为轴线进行计算。

3 在腹板一侧配置的加劲肋，其截面惯性矩应按与加劲肋相连的腹板边缘为轴线进行计算。

4.3.7 梁的支承加劲肋，应按承受梁支座反力或固定集中荷载的轴心受压构件计算其在

腹板平面外的稳定性。此受压构件的截面应包括加劲肋和加劲肋每侧 $15t_w\sqrt{235/f_y}$ 范围内的腹板面积，计算长度取 h_0。

当梁支承加劲肋的端部为刨平顶紧时，应按其所承受的支座反力或固定集中荷载计算其端面承压应力（对突缘支座尚应符合本规范第 8.4.12 条的要求）；当端部为焊接时，应按传力情况计算其焊缝应力。

支承加劲肋与腹板的连接焊缝，应按传力需要进行计算。

4.3.8 梁受压翼缘自由外伸宽度 b 与其厚度 t 之比，应符合下式要求：

$$\frac{b}{t}\leqslant 13\sqrt{\frac{235}{f_y}} \tag{4.3.8-1}$$

当计算梁抗弯强度取 $\gamma_x=1.0$ 时，b/t 可放宽至 $15\sqrt{235/f_y}$。

箱形截面梁受压翼缘板在两腹板之间的无支承宽度 b_0 与其厚度 t 之比，应符合下式要求：

$$\frac{b_0}{t}\leqslant 40\sqrt{\frac{235}{f_y}} \tag{4.3.8-2}$$

当箱形截面梁受压翼缘板设有纵向加劲肋时，则公式（4.3.8-2）中的 b_0 取为腹板与纵向加劲肋之间的翼缘板无支承宽度。

注：翼缘板自由外伸宽度 b 的取值为：对焊接构件，取腹板边至翼缘板（肢）边缘的距离；对轧制构件，取内圆弧起点至翼缘板（肢）边缘的距离。

4.4 组合梁腹板考虑屈曲后强度的计算

4.4.1 腹板仅配置支承加劲肋（或尚有中间横向加劲肋）而考虑屈曲后强度的工字形截面焊接组合梁（图 4.3.2a），应按下式验算抗弯和抗剪承载能力：

$$\left(\frac{V}{0.5V_u}-1\right)^2+\frac{M-M_f}{M_{eu}-M_f}\leqslant 1 \tag{4.4.1-1}$$

$$M_f=\left(A_{f1}\frac{h_1^2}{h_2}+A_{f2}h_2\right)f \tag{4.4.1-2}$$

式中 M、V——梁的同一截面上同时产生的弯矩和剪力设计值；计算时，当 $V<0.5V_u$，取 $V=0.5V_u$；当 $M<M_f$，取 $M=M_f$；

M_f——梁两翼缘所承担的弯矩设计值；

A_{f1}、h_1——较大翼缘的截面积及其形心至梁中和轴的距离；

A_{f2}、h_2——较小翼缘的截面积及其形心至梁中和轴的距离；

M_{eu}、V_u——梁抗弯和抗剪承载力设计值。

1 M_{eu}应按下列公式计算：

$$M_{eu}=\gamma_x\alpha_e W_x f \tag{4.4.1-3}$$

$$\alpha_e=1-\frac{(1-\rho)h_c^3 t_w}{2I_x} \tag{4.4.1-4}$$

式中 α_e——梁截面模量考虑腹板有效高度的折减系数；

I_x——按梁截面全部有效算得的绕 x 轴的惯性矩；

h_c——按梁截面全部有效算得的腹板受压区高度；

γ_x——梁截面塑性发展系数；

ρ——腹板受压区有效高度系数。

当 $\lambda_b \leqslant 0.85$ 时：

$$\rho = 1.0 \tag{4.4.1-5a}$$

当 $0.85 < \lambda_b \leqslant 1.25$ 时：

$$\rho = 1 - 0.82(\lambda_b - 0.85) \tag{4.4.1-5b}$$

当 $\lambda_b > 1.25$ 时：

$$\rho = \frac{1}{\lambda_b}\left(1 - \frac{0.2}{\lambda_b}\right) \tag{4.4.1-5c}$$

式中 λ_b——用于腹板受弯计算时的通用高厚比，按公式（4.3.3-2d）、（4.3.3-2e）计算。

2 V_u 应按下列公式计算：

当 $\lambda_s \leqslant 0.8$ 时：

$$V_u = h_w t_w f_v \tag{4.4.1-6a}$$

当 $0.8 < \lambda_s \leqslant 1.2$ 时：

$$V_u = h_w t_w f_v[1 - 0.5(\lambda_s - 0.8)] \tag{4.4.1-6b}$$

当 $\lambda_s > 1.2$ 时：

$$V_u = h_w t_w f_v / \lambda_s^{1.2} \tag{4.4.1-6c}$$

式中 λ_s——用于腹板受剪计算时的通用高厚比，按公式（4.3.3-3d）、（4.3.3-3e）计算。

当组合梁仅配置支座加劲肋时，取公式（4.3.3-3e）中的 $h_0/a = 0$。

4.4.2 当仅配置支承加劲肋不能满足公式（4.4.1-1）的要求时，应在两侧成对配置中间横向加劲肋。中间横向加劲肋和上端受有集中压力的中间支承加劲肋，其截面尺寸除应满足公式（4.3.6-1）和公式（4.3.6-2）的要求外，尚应按轴心受压构件参照第 4.3.7 条计算其在腹板平面外的稳定性，轴心压力应按下式计算：

$$N_s = V_u - \tau_{cr} h_w t_w + F \tag{4.4.2-1}$$

式中 V_u——按公式（4.4.1-6）计算；

h_w——腹板高度；

τ_{cr}——按公式（4.3.3-3）计算；

F——作用于中间支承加劲肋上端的集中压力。

当腹板在支座旁的区格利用屈曲后强度亦即 $\lambda_s > 0.8$ 时，支座加劲肋除承受梁的支座反力外尚应承受拉力场的水平分力 H，按压弯构件计算强度和在腹板平面外的稳定。

$$H = (V_u - \tau_{cr} h_w t_w)\sqrt{1 + (a/h_0)^2} \tag{4.4.2-2}$$

对设中间横向加劲肋的梁，a 取支座端区格的加劲肋间距。对不设中间加劲肋的腹板，a 取梁支座至跨内剪力为零点的距离。

H 的作用点在距腹板计算高度上边缘 $h_0/4$ 处。此压弯构件的截面和计算长度同一般支座加劲肋。当支座加劲肋采用图 4.4.2 的构造形式时，可按下述简化方法进行计算：加劲肋 1 作为承受支座反力 R 的轴心压杆计算，封头肋板 2 的截面积不应小于按下式计算

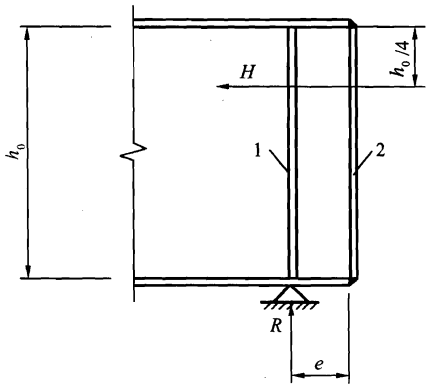

图 4.4.2　设置封头肋板的梁端构造

的数值：

$$A_c = \frac{3h_0H}{16ef} \tag{4.4.2-3}$$

注：1　腹板高厚比不应大于 250。

2　考虑腹板屈曲后强度的梁，可按构造需要设置中间横向加劲肋。

3　中间横向加劲肋间距较大（$a > 2.5h_0$）和不设中间横向加劲肋的腹板，当满足公式（4.3.3-1）时，可取 $H=0$。

5 轴心受力构件和拉弯、压弯构件的计算

5.1 轴心受力构件

5.1.1 轴心受拉构件和轴心受压构件的强度，除高强度螺栓摩擦型连接处外，应按下式计算：

$$\sigma = \frac{N}{A_n} \leqslant f \tag{5.1.1-1}$$

式中 N——轴心拉力或轴心压力；

A_n——净截面面积。

高强度螺栓摩擦型连接处的强度应按下列公式计算：

$$\sigma = \left(1 - 0.5\frac{n_1}{n}\right)\frac{N}{A_n} \leqslant f \tag{5.1.1-2}$$

$$\sigma = \frac{N}{A} \leqslant f \tag{5.1.1-3}$$

式中 n——在节点或拼接处，构件一端连接的高强度螺栓数目；

n_1——所计算截面（最外列螺栓处）上高强度螺栓数目；

A——构件的毛截面面积。

5.1.2 实腹式轴心受压构件的稳定性应按下式计算：

$$\frac{N}{\varphi A} \leqslant f \tag{5.1.2-1}$$

式中 φ——轴心受压构件的稳定系数（取截面两主轴稳定系数中的较小者），应根据构件的长细比、钢材屈服强度和表 5.1.2-1、表 5.1.2-2 的截面分类按附录 C 采用。

表 5.1.2-1 轴心受压构件的截面分类（板厚 t<40mm）

截面形式	对 x 轴	对 y 轴
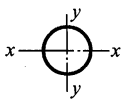 轧制	a类	a类
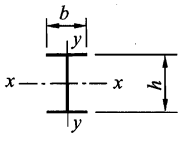 轧制，$b/h \leqslant 0.8$	a类	b类

续表 5.1.2-1

截面形式	对 x 轴	对 y 轴
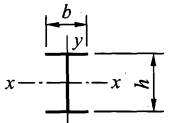 轧制，$b/h_y>0.8$	b 类	b 类
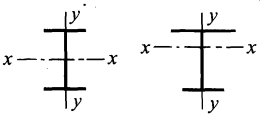 焊接，翼缘为焰切边		
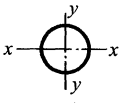 焊接		
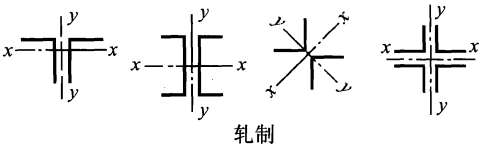 轧制		
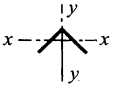 轧制等边角钢		
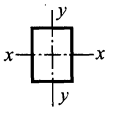 轧制，焊接（板件宽厚比>20）		
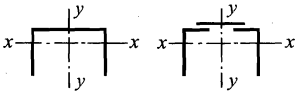 轧制或焊接		
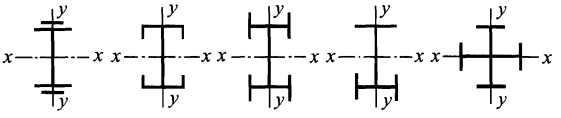 焊接		
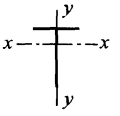 轧制截面和翼缘为焰切边的焊接截面		
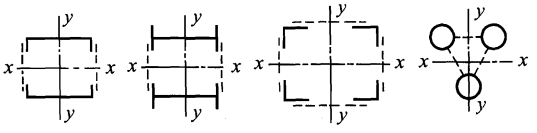 格构式		
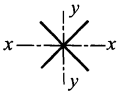 焊接，板件边缘焰切		
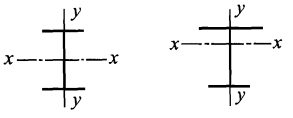 焊接、翼缘为轧制或剪切边	b 类	c 类
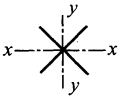 焊接，板件边缘轧制或剪切	c 类	c 类
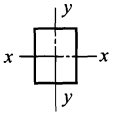 焊接，板件宽厚比≤20		

表 5.1.2-2　轴心受压构件的截面分类（板厚 $t \geqslant 40mm$）

截面形式		对 x 轴	对 y 轴
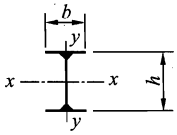	轧制工字形或 H 形截面	$t<80mm$	b 类	c 类
		$t \geqslant 80mm$	c 类	d 类
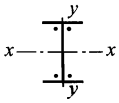	焊接工字形截面	翼缘为焰切边	b 类	b 类
		翼缘为轧制或剪切边	c 类	d 类
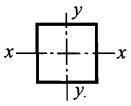	焊接箱形截面	板件宽厚比>20	b 类	b 类
		板件宽厚比≤20	c 类	c 类

构件长细比 λ 应按照下列规定确定：

1　截面为双轴对称或极对称的构件：

$$\lambda_x = l_{0x}/i_x \quad \lambda_y = l_{0y}/i_y \tag{5.1.2-2}$$

式中　l_{0x}、l_{0y}——构件对主轴 x 和 y 的计算长度；

i_x、i_y——构件截面对主轴 x 和 y 的回转半径。

对双轴对称十字形截面构件，λ_x 或 λ_y 取值不得小于 $5.07b/t$（其中 b/t 为悬伸板件宽厚比）。

2　截面为单轴对称的构件，绕非对称轴的长细比 λ_x 仍按式（5.1.2-2）计算，但绕对称轴应取计及扭转效应的下列换算长细比代替 λ_y：

$$\lambda_{yz} = \frac{1}{\sqrt{2}}\left[(\lambda_y^2 + \lambda_z^2) + \sqrt{(\lambda_y^2 + \lambda_z^2)^2 - 4(1 - e_0^2/i_0^2)\lambda_y^2\lambda_z^2}\right]^{1/2} \tag{5.1.2-3}$$

$$\lambda_z^2 = i_0^2 A/(I_t/25.7 + I_\omega/l_\omega^2) \tag{5.1.2-4}$$

$$i_0^2 = e_0^2 + i_x^2 + i_y^2$$

式中　e_0——截面形心至剪心的距离；

i_0——截面对剪心的极回转半径；

λ_y——构件对对称轴的长细比；

λ_z——扭转屈曲的换算长细比；

I_t——毛截面抗扭惯性矩；

I_ω——毛截面扇性惯性矩：对 T 形截面（轧制、双板焊接、双角钢组合）、十字形截面和角形截面可近似取 $I_\omega=0$；

A——毛截面面积；

l_ω——扭转屈曲的计算长度，对两端铰接端部截面可自由翘曲或两端嵌固端部截面

的翘曲完全受到约束的构件，取 $l_{\omega}=l_{0y}$。

3 单角钢截面和双角钢组合 T 形截面绕对称轴的 λ_{yz} 可采用下列简化方法确定：

1) 等边单角钢截面（图 5.1.2a）：

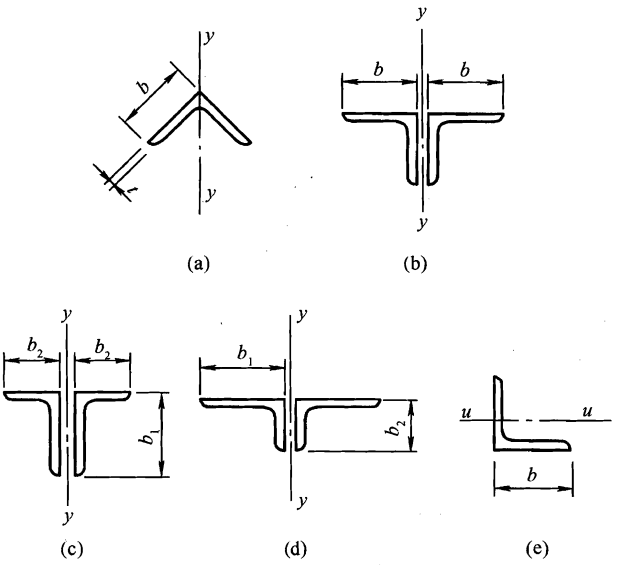

图 5.1.2　单角钢截面和双角钢组合 T 形截面

b—等边角钢肢宽度；b_1—不等边角钢长肢宽度；b_2—不等边角钢短肢宽度

当 $b/t\leqslant 0.54l_{0y}/b$ 时：

$$\lambda_{yz}=\lambda_y\left(1+\frac{0.85b^4}{l_{0y}^2t^2}\right) \tag{5.1.2-5a}$$

当 $b/t>0.54l_{0y}/b$ 时：

$$\lambda_{yz}=4.78\frac{b}{t}\left(1+\frac{l_{0y}^2t^2}{13.5b^4}\right) \tag{5.1.2-5b}$$

式中　b、t——分别为角钢肢的宽度和厚度。

2) 等边双角钢截面（图 5.1.2b）：

当 $b/t\leqslant 0.58l_{0y}/b$ 时：

$$\lambda_{yz}=\lambda_y\left(1+\frac{0.475b^4}{l_{0y}^2t^2}\right) \tag{5.1.2-6a}$$

当 $b/t>0.58l_{0y}/b$ 时：

$$\lambda_{yz}=3.9\frac{b}{t}\left(1+\frac{l_{0y}^2t^2}{18.6b^4}\right) \tag{5.1.2-6b}$$

3) 长肢相并的不等边双角钢截面（图 5.1.2c）：

当 $b_2/t\leqslant 0.48l_{0y}/b_2$ 时：

$$\lambda_{yz}=\lambda_y\left(1+\frac{1.09b_2^4}{l_{0y}^2t^2}\right) \tag{5.1.2-7a}$$

当 $b_2/t>0.48l_{0y}/b_2$ 时：

$$\lambda_{yz} = 5.1\frac{b^2}{t}\left(1+\frac{l_{0y}^2 t^2}{17.4 b_2^4}\right) \tag{5.1.2-7b}$$

4） 短肢相并的不等边双角钢截面（图 5.1.2d）：

当 $b_1/t \leqslant 0.56 l_{0y}/b_1$ 时，可近似取 $\lambda_{yz}=\lambda_y$。否则应取

$$\lambda_{yz} = 3.7\frac{b_1}{t}\left(1+\frac{l_{0y}^2 t^2}{52.7 b_1^4}\right)$$

4 单轴对称的轴心压杆在绕非对称主轴以外的任一轴失稳时，应按照弯扭屈曲计算其稳定性。当计算等边单角钢构件绕平行轴（图 5.1.2e 的 u 轴）稳定时，可用下式计算其换算长细比 λ_{uz}，并按 b 类截面确定 φ 值：

当 $b/t \leqslant 0.69 l_{0u}/b$ 时：

$$\lambda_{uz} = \lambda_u\left(1+\frac{0.25 b^4}{l_{0u}^2 t^2}\right) \tag{5.1.2-8a}$$

当 $b/t > 0.69 l_{0u}/b$ 时：

$$\lambda_{uz} = 5.4\frac{b}{t} \tag{5.1.2-8b}$$

式中 $\lambda_u = l_{0u}/i_u$；l_{0u}为构件对 u 轴的计算长度，i_u 为构件截面对 u 轴的回转半径。

注：1 无任何对称轴且又非极对称的截面（单面连接的不等边单角钢除外）不宜用作轴心受压构件。

2 对单面连接的单角钢轴心受压构件，按 3.4.2 条考虑折减系数后，可不考虑弯扭效应。

3 当槽形截面用于格构式构件的分肢，计算分肢绕对称轴（y 轴）的稳定性时，不必考虑扭转效应，直接用 λ_y 查出 φ_y 值。

5.1.3 格构式轴心受压构件的稳定性仍应按公式（5.1.2-1）计算，但对虚轴（图 5.1.3a 的 x 轴和图 5.1.3b、c 的 x 轴和 y 轴）的长细比应取换算长细比。换算长细比应按下列公式计算：

1 双肢组合构件（图 5.1.3a）

当缀件为缀板时：

$$\lambda_{0x}=\sqrt{\lambda_x^2+\lambda_1^2} \tag{5.1.3-1}$$

当缀件为缀条时：

$$\lambda_{0x}=\sqrt{\lambda_x^2+27\frac{A}{A_{1x}}} \tag{5.1.3-2}$$

式中 λ_x——整个构件对 x 轴的长细比；

λ_1——分肢对最小刚度轴 1-1 的长细比，其计算长度取为：焊接时，为相邻两缀板的净距离；螺栓连接时，为相邻两缀板边缘螺栓的距离；

A_{1x}——构件截面中垂直于 x 轴的各斜缀条毛截面面积之和。

2 四肢组合构件（图 5.1.3b）：

当缀件为缀板时：

$$\lambda_{0x}=\sqrt{\lambda_x^2+\lambda_1^2} \tag{5.1.3-3}$$

$$\lambda_{0y}=\sqrt{\lambda_y^2+\lambda_1^2} \tag{5.1.3-4}$$

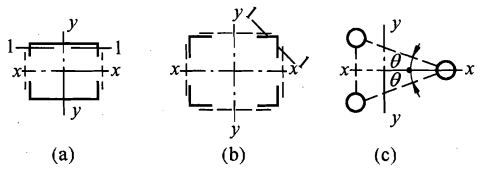

图 5.1.3 格构式组合构件截面

当缀件为缀条时：

$$\lambda_{0x}=\sqrt{\lambda_x^2+40\frac{A}{A_{1x}}} \tag{5.1.3-5}$$

$$\lambda_{0y}=\sqrt{\lambda_y^2+40\frac{A}{A_{1y}}} \tag{5.1.3-6}$$

式中 λ_y——整个构件对 y 轴的长细比；

A_{1y}——构件截面中垂直于 y 轴的各斜缀条毛截面面积之和。

3 缀件为缀条的三肢组合构件（图 5.1.3c）：

$$\lambda_{0x}=\sqrt{\lambda_x^2+\frac{42A}{A_1(1.5-\cos^2\theta)}} \tag{5.1.3-7}$$

$$\lambda_{0y}=\sqrt{\lambda_y^2+\frac{42A}{A_1\cos^2\theta}} \tag{5.1.3-8}$$

式中 A_1——构件截面中各斜缀条毛截面面积之和；

θ——构件截面内缀条所在平面与 x 轴的夹角。

注：1 缀板的线刚度应符合 8.4.1 条的规定。

2 斜缀条与构件轴线间的夹角应在 40°～70°范围内。

5.1.4 对格构式轴心受压构件：当缀件为缀条时，其分肢的长细比 λ_1 不应大于构件两方向长细比（对虚轴取换算长细比）的较大值 λ_{max} 的 0.7 倍；当缀件为缀板时，λ_1 不应大于 40，并不应大于 λ_{max} 的 0.5 倍（当 $\lambda_{max}<50$ 时，取 $\lambda_{max}=50$）。

5.1.5 用填板连接而成的双角钢或双槽钢构件，可按实腹式构件进行计算，但填板间的距离不应超过下列数值：

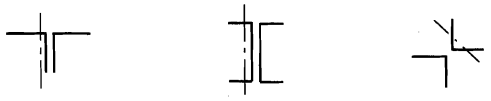

图 5.1.5 计算截面回转半径时的轴线示意图

受压构件： $40i$；

受拉构件： $80i$。

i 为截面回转半径，应按下列规定采用：

1 当为图 5.1.5a、b 所示的双角钢或双槽钢截面时，取一个角钢或一个槽钢对与填板平行的形心轴的回转半径；

2 当为图 5.1.5c 所示的十字形截面时，取一个角钢的最小回转半径。

受压构件的两个侧向支承点之间的填板数不得少于 2 个。

5.1.6 轴心受压构件应按下式计算剪力：

$$V=\frac{Af}{85}\sqrt{\frac{f_y}{235}} \tag{5.1.6}$$

剪力 V 值可认为沿构件全长不变。

对格构式轴心受压构件，剪力 V 应由承受该剪力的缀材面（包括用整体板连接的面）分担。

5.1.7 用作减小轴心受压构件（柱）自由长度的支撑，当其轴线通过被撑构件截面剪心时，沿被撑构件屈曲方向的支撑力应按下列方法计算：

1 长度为 l 的单根柱设置一道支撑时，支撑力 F_{bl} 为：

当支撑杆位于柱高度中央时：

$$F_{bl} = N/60 \tag{5.1.7-1a}$$

当支撑杆位于距柱端 αl 处时（$0<\alpha<1$）：

$$F_{bl} = \frac{N}{240\alpha(1-\alpha)} \tag{5.1.7-1b}$$

式中 N——被撑构件的最大轴心压力。

2 长度为 l 的单根柱设置 m 道等间距（或间距不等但与平均间距相比相差不超过20%）支撑时，各支承点的支撑力 F_{bm}为：

$$F_{bm} = N/[30(m+1)] \tag{5.1.7-2}$$

3 被撑构件为多根柱组成的柱列，在柱高度中央附近设置一道支撑时，支撑力应按下式计算：

$$F_{bn} = \frac{\sum N_i}{60}\left(0.6+\frac{0.4}{n}\right) \tag{5.1.7-3}$$

式中 n——柱列中被撑柱的根数；

$\sum N_i$——被撑柱同时存在的轴心压力设计值之和。

4 当支撑同时承担结构上其他作用的效应时，其相应的轴力可不与支撑力相叠加。

5.2 拉弯构件和压弯构件

5.2.1 弯矩作用在主平面内的拉弯构件和压弯构件，其强度应按下列规定计算：

$$\frac{N}{A_n} \pm \frac{M_x}{\gamma_x W_{nx}} \pm \frac{M_y}{\gamma_y W_{ny}} \leqslant f \tag{5.2.1}$$

式中 γ_x、γ_y——与截面模量相应的截面塑性发展系数，应按表5.2.1采用。

表5.2.1 截面塑性发展系数 γ_x、γ_y

项次	截面形式	γ_x	γ_y
1	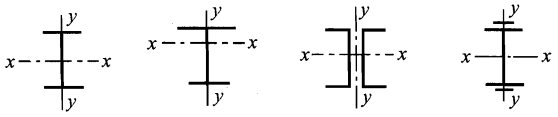	1.05	1.2
2	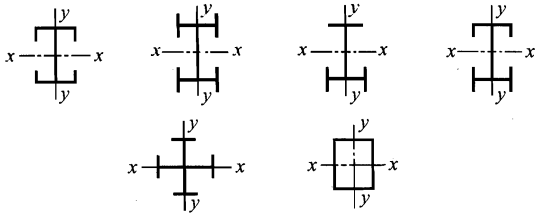		1.05
3	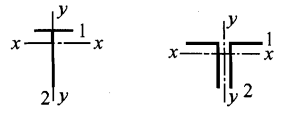	$\gamma_{x1}=1.05$ $\gamma_{x2}=1.2$	1.2
4	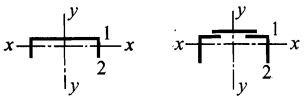		1.05

续表 5.2.1

项次	截 面 形 式	γ_x	γ_y
5	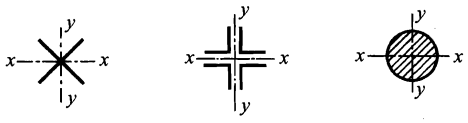	1.2	1.2
6	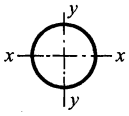	1.15	1.15
7	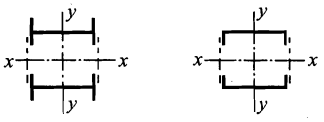	1.0	1.05
8	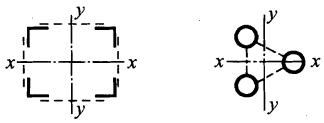		1.0

当压弯构件受压翼缘的自由外伸宽度与其厚度之比大于 13 $\sqrt{235/f_y}$ 而不超过 15 $\sqrt{235/f_y}$ 时，应取 $\gamma_x=1.0$。

需要计算疲劳的拉弯、压弯构件，宜取 $\gamma_x=\gamma_y=1.0$。

5.2.2 弯矩作用在对称轴平面内（绕 x 轴）的实腹式压弯构件，其稳定性应按下列规定计算：

1 弯矩作用平面内的稳定性：

$$\frac{N}{\varphi_x A}+\frac{\beta_{mx}M_x}{\gamma_x W_{1x}\left(1-0.8\dfrac{N}{N'_{Ex}}\right)}\leqslant f \tag{5.2.2-1}$$

式中 N——所计算构件段范围内的轴心压力；

N'_{Ex}——参数，$N'_{Ex}=\pi^2EA/(1.1\lambda_x^2)$；

φ_x——弯矩作用平面内的轴心受压构件稳定系数；

M_x——所计算构件段范围内的最大弯矩；

W_{1x}——在弯矩作用平面内对较大受压纤维的毛截面模量；

β_{mx}——等效弯矩系数，应按下列规定采用：

1） 框架柱和两端支承的构件：

①无横向荷载作用时：$\beta_{mx}=0.65+0.35\dfrac{M_2}{M_1}$，$M_1$ 和 M_2 为端弯矩，使构件产生同向曲率（无反弯点）时取同号；使构件产生反向曲率（有反弯点）时取异号，$|M_1|\geqslant|M_2|$；

②有端弯矩和横向荷载同时作用时：使构件产生同向曲率时，$\beta_{mx}=1.0$；使构

件产生反向曲率时，$\beta_{mx}=0.85$；

③无端弯矩但有横向荷载作用时：$\beta_{mx}=1.0$。

2）悬臂构件和分析内力未考虑二阶效应的无支撑纯框架和弱支撑框架柱，$\beta_{mx}=1.0$。

对于表 5.2.1 的 3、4 项中的单轴对称截面压弯构件，当弯矩作用在对称轴平面内且使翼缘受压时，除应按公式（5.2.2-1）计算外，尚应按下式计算：

$$\left|\frac{N}{A}-\frac{\beta_{mx}M_x}{\gamma_x W_{2x}\left(1-1.25\dfrac{N}{N'_{Ex}}\right)}\right|\leqslant f \tag{5.2.2-2}$$

式中 W_{2x}——对无翼缘端的毛截面模量。

2 弯矩作用平面外的稳定性：

$$\frac{N}{\varphi_y A}+\eta\frac{\beta_{tx}M_x}{\varphi_b W_{1x}}\leqslant f \tag{5.2.2-3}$$

式中 φ_y——弯矩作用平面外的轴心受压构件稳定系数，按 5.1.2 条确定；

φ_b——均匀弯曲的受弯构件整体稳定系数，按附录 B 计算，其中工字形（含 H 型钢）和 T 形截面的非悬臂（悬伸）构件可按附录 B 第 B.5 节确定；对闭口截面 $\varphi_b=1.0$；

M_x——所计算构件段范围内的最大弯矩；

η——截面影响系数，闭口截面 $\eta=0.7$，其他截面 $\eta=1.0$；

β_{tx}——等效弯矩系数，应按下列规定采用：

1）在弯矩作用平面外有支承的构件，应根据两相邻支承点间构件段内的荷载和内力情况确定：

①所考虑构件段无横向荷载作用时：$\beta_{tx}=0.65+0.35\dfrac{M_2}{M_1}$，$M_1$ 和 M_2 是在弯矩作用平面内的端弯矩，使构件段产生同向曲率时取同号；产生反向曲率时取异号，$|M_1|\geqslant|M_2|$；

②所考虑构件段内有端弯矩和横向荷载同时作用时：使构件段产生同向曲率时，$\beta_{tx}=1.0$；使构件段产生反向曲率时，$\beta_{tx}=0.85$；

③所考虑构件段内无端弯矩但有横向荷载作用时：$\beta_{tx}=1.0$。

2）弯矩作用平面外为悬臂的构件，$\beta_{tx}=1.0$。

5.2.3 弯矩绕虚轴（x 轴）作用的格构式压弯构件，其弯矩作用平面内的整体稳定性应按下式计算：

$$\frac{N}{\varphi_x A}+\frac{\beta_{mx}M_x}{W_{1x}\left(1-\varphi_x\dfrac{N}{N'_{Ex}}\right)}\leqslant f \tag{5.2.3}$$

式中 $W_{1x}=I_x/y_0$，I_x 为对 x 轴的毛截面惯性矩，y_0 为由 x 轴到压力较大分肢的轴线距离或者到压力较大分肢腹板外边缘的距离，二者取较大者；φ_x、N'_{Ex}由换算长细比确定。

弯矩作用平面外的整体稳定性可不计算，但应计算分肢的稳定性，分肢的轴心力应按桁架的弦杆计算。对缀板柱的分肢尚应考虑由剪力引起的局部弯矩。

5.2.4 弯矩绕实轴作用的格构式压弯构件，其弯矩作用平面内和平面外的稳定性计算均与实腹式构件相同。但在计算弯矩作用平面外的整体稳定性时，长细比应取换算长细比，φ_b 应取 1.0。

5.2.5 弯矩作用在两个主平面内的双轴对称实腹式工字形（含 H 形）和箱形（闭口）截面的压弯构件，其稳定性应按下列公式计算：

$$\frac{N}{\varphi_x A}+\frac{\beta_{mx}M_x}{\gamma_x W_x\left(1-0.8\dfrac{N}{N'_{Ex}}\right)}+\eta\frac{\beta_{ty}M_y}{\varphi_{by}W_y}\leqslant f \tag{5.2.5-1}$$

$$\frac{N}{\varphi_y A}+\eta\frac{\beta_{tx}M_x}{\varphi_{bx}W_x}+\frac{\beta_{my}M_y}{\gamma_y W_y\left(1-0.8\dfrac{N}{N'_{Ey}}\right)}\leqslant f \tag{5.2.5-2}$$

式中 φ_x、φ_y——对强轴 x-x 和弱轴 y-y 的轴心受压构件稳定系数；

φ_{bx}、φ_{by}——均匀弯曲的受弯构件整体稳定性系数，按附录 B 计算，其中工字形（含 H 型钢）截面的非悬臂（悬伸）构件 φ_{bx}可按附录 B 第 B.5 节确定，φ_{by}可取 1.0；对闭口截面，取 $\varphi_{bx}=\varphi_{by}=1.0$；

M_x、M_y——所计算构件段范围内对强轴和弱轴的最大弯矩；

N'_{Ex}、N'_{Ey}——参数，$N'_{Ey}=\pi^2EA/(1.1\lambda_x^2)$，$N'_{Ey}=\pi^2EA/(1.1\lambda_y^2)$；

W_x、W_y——对强轴和弱轴的毛截面模量；

β_{mx}、β_{my}——等效弯矩系数，应按 5.2.2 条弯矩作用平面内稳定计算的有关规定采用；

β_{tx}、β_{ty}——等效弯矩系数，应按 5.2.2 条弯矩作用平面外稳定计算的有关规定采用。

5.2.6 弯矩作用在两个主平面内的双肢格构式压弯构件，其稳定性应按下列规定计算：

1 按整体计算：

$$\frac{N}{\varphi_x A}+\frac{\beta_{mx}M_x}{W_{1x}\left(1-\varphi_x\dfrac{N}{N'_{Ex}}\right)}+\frac{\beta_{ty}M_y}{W_{1y}}\leqslant f \tag{5.2.6-1}$$

式中 W_{1y}——在 W_y作用下，对较大受压纤维的毛截面模量。

2 按分肢计算：

在 N 和 M_x 作用下，将分肢作为桁架弦杆计算其轴心力，M_y 按公式（5.2.6-2）和公式（5.2.6-3）分配给两分肢（图 5.2.6），然后按 5.2.2 条的规定计算分肢稳定性。

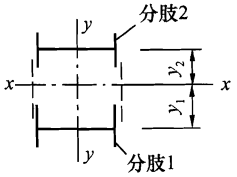

图 5.2.6 格构式构件截面

分肢 1：
$$M_{y1}=\frac{I_1/y_1}{I_1/y_1+I_2/y_2}\cdot M_y \tag{5.2.6-2}$$

分肢 2：
$$M_{y2}=\frac{I_2/y_2}{I_1/y_1+I_2/y_2}\cdot M_y \tag{5.2.6-3}$$

式中 I_1、I_2——分肢 1、分肢 2 对 y 轴的惯性矩；

y_1、y_2——M_y 作用的主轴平面至分肢 1、分肢 2 轴线的距离。

5.2.7 计算格构式压弯构件的缀件时，应取构件的实际剪力和按本规范公式（5.1.6）计算的剪力两者中的较大值进行计算。

5.2.8 用作减小压弯构件弯矩作用平面外计算长度的支撑，应将压弯构件的受压翼缘（对实腹式构件）或受压分肢（对格构式构件）视为轴心压杆按本规范第 5.1.7 条的规定计算各自的支撑力。

5.3 构件的计算长度和容许长细比

5.3.1 确定桁架弦杆和单系腹杆（用节点板与弦杆连接）的长细比时，其计算长度 l_0 应按表 5.3.1 采用。

表 5.3.1 桁架弦杆和单系腹杆的计算长度 l_0

项次	弯曲方向	弦杆	腹杆	
			支座斜杆和支座竖杆	其他腹杆
1	在桁架平面内	l	l	$0.8l$
2	在桁架平面外	l_1	l	l
3	斜平面	—	l	$0.9l$

注：1 l 为构件的几何长度（节点中心间距离）；l_1 为桁架弦杆侧向支承点之间的距离。

2 斜平面系指与桁架平面斜交的平面，适用于构件截面两主轴均不在桁架平面内的单角钢腹杆和双角钢十字形截面腹杆。

3 无节点板的腹杆计算长度在任意平面内均取其等于几何长度（钢管结构除外）。

当桁架弦杆侧向支承点之间的距离为节间长度的 2 倍（图 5.3.1）且两节间的弦杆轴心压力不相同时，则该弦杆在桁架平面外的计算长度，应按下式确定（但不应小于 $0.5l_1$）：

$$l_0 = l_1\left(0.75 + 0.25\frac{N_2}{N_1}\right) \tag{5.3.1}$$

式中 N_1——较大的压力，计算时取正值；

N_1——较小的压力或拉力，计算时压力取正值，拉力取负值。

桁架再分式腹杆体系的受压主斜杆及 K 形腹杆体系的竖杆等，在桁架平面外的计算长度也应按公式（5.3.1）确定（受拉主斜杆仍取 l_1）；在桁架平面内的计算长度则取节点中心间距离。

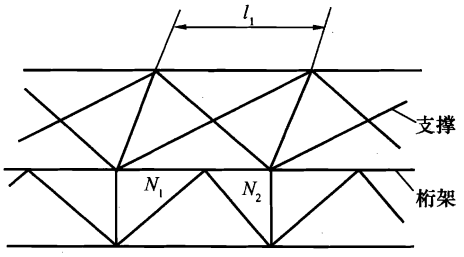

图 5.3.1 弦杆轴心压力在侧向支承点间有变化的桁架简图

5.3.2 确定在交叉点相互连接的桁架交叉腹杆的长细比时，在桁架平面内的计算长度应取节点中心到交叉点间的距离；在桁架平面外的计算长度，当两交叉杆长度相等时，应按下列规定采用：

1 压杆。

1） 相交另一杆受压，两杆截面相同并在交叉点均不中断，则：

$$l_0 = l\sqrt{\frac{1}{2}\left(1 + \frac{N_0}{N}\right)}$$

2） 相交另一杆受压，此另一杆在交叉点中断但以节点板搭接，则：

$$l_0 = l\sqrt{1+\frac{\pi^2}{12}\cdot\frac{N_0}{N}}$$

3）相交另一杆受拉，两杆截面相同并在交叉点均不中断，则：

$$l_0 = l\sqrt{\frac{1}{2}\left(1-\frac{3}{4}\cdot\frac{N_0}{N}\right)} \geqslant 0.5l$$

4）相交另一杆受拉，此拉杆在交叉点中断但以节点板搭接，则：

$$l_0 = l\sqrt{1-\frac{3}{4}\cdot\frac{N_0}{N}} \geqslant 0.5l$$

当此拉杆连续而压杆在交叉点中断但以节点板搭接，若 $N_0 \geqslant N$ 或拉杆在桁架平面外的抗弯刚度 $EI_y \geqslant \frac{3N_0 l^2}{4\pi^2}\left(\frac{N}{N_0}-1\right)$ 时，取 $l_0=0.5l$。

式中 l 为桁架节点中心间距离（交叉点不作为节点考虑）；N 为所计算杆的内力；N_0 为相交另一杆的内力，均为绝对值。两杆均受压时，取 $N_0 \leqslant N$，两杆截面应相同。

2 拉杆，应取 $l_0=l$。

当确定交叉腹杆中单角钢杆件斜平面内的长细比时，计算长度应取节点中心至交叉点的距离。

5.3.3 单层或多层框架等截面柱，在框架平面内的计算长度应等于该层柱的高度乘以计算长度系数 μ。框架分为无支撑的纯框架和有支撑框架，其中有支撑框架根据抗侧移刚度的大小，分为强支撑框架和弱支撑框架。

1 无支撑纯框架。

1）当采用一阶弹性分析方法计算内力时，框架柱的计算长度系数 μ 按本规范附录D表D-2有侧移框架柱的计算长度系数确定。

2）当采用二阶弹性分析方法计算内力且在每层柱顶附加考虑公式（3.2.8-1）的假想水平力 H_{ni} 时，框架柱的计算长度系数 $\mu=1.0$。

2 有支撑框架。

1）当支撑结构（支撑桁架、剪力墙、电梯井等）的侧移刚度（产生单位侧倾角的水平力）S_b 满足公式（5.3.3-1）的要求时，为强支撑框架，框架柱的计算长度系数 μ 按本规范附录D表D-1无侧移框架柱的计算长度系数确定。

$$S_b \geqslant 3\ (1.2\sum N_{bi} - \sum N_{0i}) \qquad (5.3.3\text{-}1)$$

式中 $\sum N_{bi}$、$\sum N_{0i}$——第i层层间所有框架柱用无侧移框架和有侧移框架柱计算长度系数算得的轴压杆稳定承载力之和。

2）当支撑结构的侧移刚度 S_b 不满足公式（5.3.3-1）的要求时，为弱支撑框架，框架柱的轴压杆稳定系数 φ 按公式（5.3.3-2）计算。

$$\varphi = \varphi_0 + (\varphi_1 - \varphi_0)\frac{S_b}{3\ (1.2\sum N_{bi} - \sum N_{0i})} \qquad (5.3.3\text{-}2)$$

式中 φ_1、φ_0——分别是框架柱用附录D中无侧移框架柱和有侧移框架柱计算长度系数算得的轴心压杆稳定系数。

5.3.4 单层厂房框架下端刚性固定的阶形柱，在框架平面内的计算长度应按下列规定确定：

1　单阶柱：

1）下段柱的计算长度系数 μ_2：当柱上端与横梁铰接时，等于按本规范附录 D 表 D-3（柱上端为自由的单阶柱）的数值乘以表 5.3.4 的折减系数；当柱上端与横梁刚接时，等于按本规范附录 D 表 D-4（柱上端可移动但不转动的单阶柱）的数值乘以表 5.3.4 的折减系数。

表 5.3.4　单层厂房阶形柱计算长度的折减系数

厂房类型				折减系数
单跨或多跨	纵向温度区段内一个柱列的柱子数	屋面情况	厂房两侧是否有通长的屋盖纵向水平支撑	
单跨	等于或少于 6 个	—	—	0.9
	多于 6 个	非大型混凝土屋面板的屋面	无纵向水平支撑	
			有纵向水平支撑	0.8
		大型混凝土屋面板的屋面	—	
多跨	—	非大型混凝土屋面板的屋面	无纵向水平支撑	
			有纵向水平支撑	0.7
		大型混凝土屋面板的屋面	—	

注：有横梁的露天结构（如落锤车间等），其折减系数可采用 0.9。

2）上段柱的计算长度系数 μ_1，应按下式计算：

$$\mu_1 = \frac{\mu_2}{\eta_1} \tag{5.3.4-1}$$

式中　η_1——参数，按附录 D 表 D-3 或表 D-4 中公式计算。

2　双阶柱：

1）下段柱的计算长度系数 μ_3：当柱上端与横梁铰接时，等于按附录 D 表 D-5（柱上端为自由的双阶柱）的数值乘以表 5.3.4 的折减系数；当柱上端与横梁刚接时，等于按附录 D 表 D-6（柱上端可移动但不转动的双阶柱）的数值乘以表 5.3.4 的折减系数。

2）上段柱和中段柱的计算长度系数 μ_1 和 μ_2，应按下列公式计算：

$$\mu_1 = \frac{\mu_3}{\eta_1} \tag{5.3.4-2}$$

$$\mu_2 = \frac{\mu_3}{\eta_2} \tag{5.3.4-3}$$

式中　η_1、η_2——参数，按附录 D 表 D-5 或表 D-6 中的公式计算。

注：对截面均匀变化的楔形柱，其计算长度的取值参见现行国家标准《冷弯薄壁型钢结构技术规范》GB50018。

5.3.5　当计算框架的格构式柱和桁架式横梁的惯性矩时，应考虑柱或横梁截面高度变化和缀件（或腹杆）变形的影响。

5.3.6　在确定下列情况的框架柱计算长度系数时应考虑：

1 附有摇摆柱（两端铰接柱）的无支撑纯框架柱和弱支撑框架柱的计算长度系数应乘以增大系数 η：

$$\eta=\sqrt{1+\frac{\sum(N_l/H_l)}{\sum(N_f/H_f)}} \tag{5.3.6}$$

式中 $\sum(N_f/H_f)$——各框架柱轴心压力设计值与柱子高度比值之和；

$\sum(N_l/H_l)$——各摇摆柱轴心压力设计值与柱子高度比值之和。

摇摆柱的计算长度取其几何长度。

2 当与计算柱同层的其他柱或与计算柱连续的上下层柱的稳定承载力有潜力时，可利用这些柱的支持作用，对计算柱的计算长度系数进行折减，提供支持作用的柱的计算长度系数则应相应增大。

3 当梁与柱的连接为半刚性构造时，确定柱计算长度应考虑节点连接的特性。

5.3.7 框架柱沿房屋长度方向（在框架平面外）的计算长度应取阻止框架柱平面外位移的支承点之间的距离。

5.3.8 受压构件的长细比不宜超过表 5.3.8 的容许值。

表 5.3.8 受压构件的容许长细比

项次	构件名称	容许长细比
1	柱、桁架和天窗架中的杆件	150
	柱的缀条、吊车梁或吊车桁架以下的柱间支撑	
2	支撑（吊车梁或吊车桁架以下的柱间支撑除外）	200
	用以减小受压构件长细比的杆件	

注：1 桁架（包括空间桁架）的受压腹杆，当其内力等于或小于承载能力的 50% 时，容许长细比值可取 200。

2 计算单角钢受压构件的长细比时，应采用角钢的最小回转半径，但计算在交叉点相互连接的交叉杆件平面外的长细比时，可采用与角钢肢边平行轴的回转半径。

3 跨度等于或大于 60m 的桁架，其受压弦杆和端压杆的容许长细比值宜取 100，其他受压腹杆可取 150（承受静力荷载或间接承受动力荷载）或 120（直接承受动力荷载）。

4 由容许长细比控制截面的杆件，在计算其长细比时，可不考虑扭转效应。

5.3.9 受拉构件的长细比不宜超过表 5.3.9 的容许值。

表 5.3.9 受拉构件的容许长细比

项次	构件名称	承受静力荷载或间接承受动力荷载的结构		直接承受动力荷载的结构
		一般建筑结构	有重级工作制吊车的厂房	
1	桁架的杆件	350	250	250
2	吊车梁或吊车桁架以下的柱间支撑	300	200	—
3	其他拉杆、支撑、系杆等（张紧的圆钢除外）	400	350	—

注：1 承受静力荷载的结构中，可仅计算受拉构件在竖向平面内的长细比。

2 在直接或间接承受动力荷载的结构中，单角钢受拉构件长细比的计算方法与表 5.3.8 注 2 相同。

3 中、重级工作制吊车桁架下弦杆的长细比不宜超过 200。

4 在设有夹钳或刚性料耙等硬钩吊车的厂房中，支撑（表中第 2 项除外）的长细比不宜超过 300。

5 受拉构件在永久荷载与风荷载组合作用下受压时，其长细比不宜超过 250。

6 跨度等于或大于 60m 的桁架，其受拉弦杆和腹杆的长细比不宜超过 300（承受静力荷载或间接承受动力荷载）或 250（直接承受动力荷载）。

5.4 受压构件的局部稳定

5.4.1 在受压构件中，翼缘板自由外伸宽度 b 与其厚度 t 之比，应符合下列要求：

1 轴心受压构件：

$$\frac{b}{t} \leqslant (10 + 0.1\lambda)\sqrt{\frac{235}{f_y}} \tag{5.4.1-1}$$

式中 λ——构件两方向长细比的较大值；当 $\lambda < 30$ 时，取 $\lambda = 30$；当 $\lambda > 100$ 时，取 $\lambda = 100$。

2 压弯构件：

$$\frac{b}{t} \leqslant 13\sqrt{\frac{235}{f_y}} \tag{5.4.1-2}$$

当强度和稳定计算中取 $\gamma_x = 1.0$ 时，b/t 可放宽至 $15\sqrt{235/f_y}$。

注：翼缘板自由外伸宽度 b 的取值为：对焊接构件，取腹板边至翼缘板（肢）边缘的距离；对轧制构件，取内圆弧起点至翼缘板（肢）边缘的距离。

5.4.2 在工字形及 H 形截面的受压构件中，腹板计算高度 h_0 与其厚度 t_w 之比，应符合下列要求：

1 轴心受压构件：

$$\frac{h_0}{t_w} \leqslant (25 + 0.5\lambda)\sqrt{\frac{235}{f_y}} \tag{5.4.2-1}$$

式中 λ——构件两方向长细比的较大值；当 $\lambda < 30$ 时，取 $\lambda = 30$；当 $\lambda > 100$ 时，取 $\lambda = 100$。

2 压弯构件：

当 $0 \leqslant \alpha_0 \leqslant 1.6$ 时：

$$\frac{h_0}{t_w} \leqslant (16\alpha_0 + 0.5\lambda + 25)\sqrt{\frac{235}{f_y}} \tag{5.4.2-2}$$

当 $1.6 < \alpha_0 \leqslant 2.0$ 时：

$$\frac{h_0}{t_w} \leqslant (48\alpha_0 + 0.5\lambda - 26.2)\sqrt{\frac{235}{f_y}} \tag{5.4.2-3}$$

$$\alpha_0 = \frac{\sigma_{max} - \sigma_{min}}{\sigma_{max}}$$

式中 σ_{max}——腹板计算高度边缘的最大压应力，计算时不考虑构件的稳定系数和截面塑性发展系数；

σ_{min}——腹板计算高度另一边缘相应的应力，压应力取正值，拉应力取负值；

λ——构件在弯矩作用平面内的长细比；当 $\lambda < 30$ 时，取 $\lambda = 30$；当 $\lambda > 100$，取 $\lambda = 100$。

5.4.3 在箱形截面的受压构件中，受压翼缘的宽厚比应符合 4.3.8 条的要求。

箱形截面受压构件的腹板计算高度 h_0 与其厚度 t_w 之比，应符合下列要求：

1 轴心受压构件：

$$\frac{h_0}{t_w} \leqslant 40\sqrt{\frac{235}{f_y}} \tag{5.4.3}$$

2 压弯构件的 h_0/t_w 不应超过公式（5.4.2-2）或公式（5.4.2-3）右侧乘以 0.8 后的值（当此值小于 $40\sqrt{235/f_y}$ 时，应采用 $40\sqrt{235/f_y}$）。

5.4.4 在 T 形截面受压构件中，腹板高度与其厚度之比，不应超过下列数值：

1 轴心受压构件和弯矩使腹板自由边受拉的压弯构件：

热轧部分 T 形钢：$(15+0.2\lambda)\sqrt{235/f_y}$ 焊接 T 形钢：$(13+0.17\lambda)\sqrt{235/f_y}$

2 弯矩使腹板自由边受压的压弯构件：

当 $\alpha_0 \leqslant 1.0$ 时：$15\sqrt{235/f_y}$

当 $\alpha_0 > 1.0$ 时：$18\sqrt{235/f_y}$

λ 和 α_0 分别按 5.4.1 条和 5.4.2 条的规定采用。

5.4.5 圆管截面的受压构件，其外径与壁厚之比不应超过 $100(235/f_y)$。

5.4.6 H 形、工字形和箱形截面受压构件的腹板，其高厚比不符合本规范第 5.4.3 条或第 5.4.3 条的要求时，可用纵向加劲肋加强，或在计算构件的强度和稳定性时将腹板的截面仅考虑计算高度边缘范围内两侧宽度各为 $20t_w\sqrt{235/f_y}$ 的部分（计算构件的稳定系数时，仍用全部截面）。

用纵向加劲肋加强的腹板，其在受压较大翼缘与纵向加劲肋之间的高厚比，应符合本规范第 5.4.2 条或第 5.4.3 条的要求。

纵向加劲肋宜在腹板两侧成对配置，其一侧外伸宽度不应小于 $10t_w$，厚度不应小于 $0.75t_w$。

6 疲劳计算

6.1 一般规定

6.1.1 直接承受动力荷载重复作用的钢结构构件及其连接，当应力变化的循环次数 n 等于或大于 5×10^4 次时，应进行疲劳计算。

6.1.2 本章规定不适用于特殊条件（如构件表面温度大于 150℃，处于海水腐蚀环境，焊后经热处理消除残余应力以及低周-高应变疲劳条件等）下的结构构件及其连接的疲劳计算。

6.1.3 疲劳计算采用容许应力幅法，应力按弹性状态计算，容许应力幅按构件和连接类别以及应力循环次数确定。在应力循环中不出现拉应力的部位可不计算疲劳。

6.2 疲劳计算

6.2.1 对常幅（所有应力循环内的应力幅保持常量）疲劳，应按下式进行计算：

$$\Delta\sigma \leqslant [\Delta\sigma] \tag{6.2.1-1}$$

式中 $\Delta\sigma$——对焊接部位为应力幅，$\Delta\sigma=\sigma_{max}-\sigma_{min}$；对非焊接部位为折算应力幅，$\Delta\sigma=\sigma_{max}-0.7\sigma_{min}$；

σ_{max}——计算部位每次应力循环中的最大拉应力（取正值）；

σ_{min}——计算部位每次应力循环中的最小拉应力或压应力（拉应力取正值，压应力取负值）；

$[\Delta\sigma]$——常幅疲劳的容许应力幅（N/mm^2），应按下式计算：

$$[\Delta\sigma]=\left(\frac{C}{n}\right)^{1/\beta} \tag{6.2.1-2}$$

n——应力循环次数；

C、β——参数，根据本规范附录 E 中的构件和连接类别按表 6.2.1 采用。

表 6.2.1 参 数 C、β

构件和连接类别	1	2	3	4	5	6	7	8
C	1940×10^{12}	861×10^{12}	3.26×10^{12}	2.18×10^{12}	1.47×10^{12}	0.96×10^{12}	0.65×10^{12}	0.41×10^{12}
β	4	4	3	3	3	3	3	3

注：公式（6.2.1-1）也适用于剪应力情况。

6.2.2 对变幅（应力循环内的应力幅随机变化）疲劳，若能预测结构在使用寿命期间各种荷载的频率分布、应力幅水平以及频次分布总和所构成的设计应力谱，则可将其折算为等效常幅疲劳，按下式进行计算：

$$\Delta\sigma_e \leqslant [\Delta\sigma] \tag{6.2.2-1}$$

式中 $\Delta\sigma_e$——变幅疲劳的等效应力幅，按下式确定：

$$\Delta\sigma_e \leqslant \left[\frac{\sum n_i\ (\Delta\sigma_i)^\beta}{\sum n_i}\right]^{1/\beta} \tag{6.2.2-2}$$

$\sum n_i$——以应力循环次数表示的结构预期使用寿命；

n_i——预期寿命内应力幅水平达到 $\Delta\sigma_i$ 的应力循环次数。

6.2.3 重级工作制吊车梁和重级、中级工作制吊车桁架的疲劳可作为常幅疲劳，按下式计算：

$$\alpha_f \cdot \Delta\sigma \leqslant [\Delta\sigma]_{2\times10^6} \tag{6.2.3}$$

式中 α_f——欠载效应的等效系数，按表 6.2.3-1 采用；

$[\Delta\sigma]_{2\times10^6}$——循环次数 n 为 2×10^6 次的容许应力幅，按表 6.2.3-2 采用。

表 6.2.3-1 吊车梁和吊车桁架欠载效应的等效系数 α_f

吊 车 类 别	α_f
重级工作制硬钩吊车（如均热炉车间夹钳吊车）	1.0
重级工作制软钩吊车	0.8
中级工作制吊车	0.5

表 6.2.3-2 循环次数 n 为 2×10^6 次的容许应力幅（N/mm²）

构件和连接类别	1	2	3	4	5	6	7	8
$[\Delta\sigma]_{2\times10^6}$	176	144	118	103	90	78	69	59

注：表中的容许应力幅是按公式(6.2.1-2)计算的。

7 连 接 计 算

7.1 焊 缝 连 接

7.1.1 焊缝应根据结构的重要性、荷载特性、焊缝形式、工作环境以及应力状态等情况，按下述原则分别选用不同的质量等级：

1 在需要进行疲劳计算的构件中，凡对接焊缝均应焊透，其质量等级为：

1） 作用力垂直于焊缝长度方向的横向对接焊缝或T形对接与角接组合焊缝，受拉时应为一级，受压时应为二级；

2） 作用力平行于焊缝长度方向的纵向对接焊缝应为二级。

2 不需要计算疲劳的构件中，凡要求与母材等强的对接焊缝应予焊透，其质量等级当受拉时应不低于二级，受压时宜为二级。

3 重级工作制和起重量 $Q\geqslant 50t$ 的中级工作制吊车梁的腹板与上翼缘之间以及吊车桁架上弦杆与节点板之间的T形接头焊缝均要求焊透，焊缝形式一般为对接与角接的组合焊缝，其质量等级不应低于二级。

4 不要求焊透的T形接头采用的角焊缝或部分焊透的对接与角接组合焊缝，以及搭接连接采用的角焊缝，其质量等级为：

1） 对直接承受动力荷载且需要验算疲劳的结构和吊车起重量等于或大于50t的中级工作制吊车梁，焊缝的外观质量标准应符合二级；

2） 对其他结构，焊缝的外观质量标准可为三级。

7.1.2 对接焊缝或对接与角接组合焊缝的强度计算。

1 在对接接头和T形接头中，垂直于轴心拉力或轴心压力的对接焊缝或对接与角接组合焊缝，其强度应按下式计算：

$$\sigma=\frac{N}{l_w t}\leqslant f_t^w \text{ 或 } f_c^w \tag{7.1.2-1}$$

式中 N——轴心拉力或轴心压力；

l_w——焊缝长度；

t——在对接接头中为连接件的较小厚度；在T形接头中为腹板的厚度；

f_t^w、f_c^w——对接焊缝的抗拉、抗压强度设计值。

2 在对接接头和T形接头中，承受弯矩和剪力共同作用的对接焊缝或对接与角接组合焊缝，其正应力和剪应力应分别进行计算。但在同时受有较大正应力和剪应力处（例如梁腹板横向对接焊缝的端部），应按下式计算折算应力：

$$\sqrt{\sigma^2+3\tau^2}\leqslant 1.1 f_t^w \tag{7.1.2-2}$$

注：1 当承受轴心力的板件用斜焊缝对接，焊缝与作用力间的夹角 θ 符合 $\tan\theta\leqslant 1.5$ 时，其强度可不计算。

2 当对接焊缝和T形对接与角接组合焊缝无法采用引弧板和引出板施焊时，每条焊缝的长度计算时应各减去 $2t$。

7.1.3 直角角焊缝的强度计算。

1 在通过焊缝形心的拉力、压力或剪力作用下：

正面角焊缝（作用力垂直于焊缝长度方向）：

$$\sigma_f=\frac{N}{h_e l_w}\leqslant\beta_f f_f^w \tag{7.1.3-1}$$

侧面角焊缝（作用力平行于焊缝长度方向）：

$$\tau_f=\frac{N}{h_e l_w}\leqslant f_f^w \tag{7.1.3-2}$$

2 在各种力综合作用下，σ_f 和 τ_f 共同作用处：

$$\sqrt{\left(\frac{\sigma_f}{\beta_f}\right)^2+\tau_f^2}\leqslant f_f^w \tag{7.1.3-3}$$

式中 σ_f——按焊缝有效截面（$h_e l_w$）计算，垂直于焊缝长度方向的应力；

τ_f——按焊缝有效截面计算，沿焊缝长度方向的剪应力；

h_e——角焊缝的计算厚度，对直角角焊缝等于 $0.7h_f$，h_f 为焊脚尺寸（图 7.1.3）；

l_w——角焊缝的计算长度，对每条焊缝取其实际长度减去 $2h_f$；

f_f^w——角焊缝的强度设计值；

β_f——正面角焊缝的强度设计值增大系数：对承受静力荷载和间接承受动力荷载的结构，$\beta_f=1.22$；对直接承受动力荷载的结构，$\beta_f=1.0$。

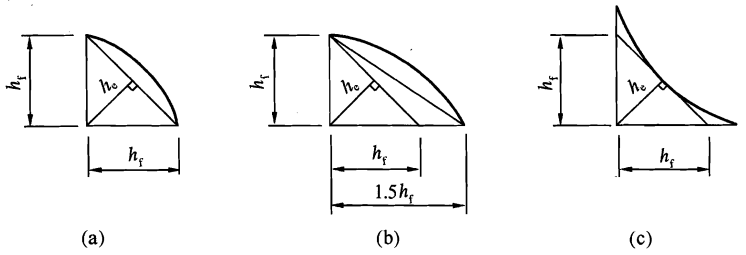

图 7.1.3 直角角焊缝截面

7.1.4 两焊脚边夹角 α 为 $60°\leqslant\alpha\leqslant135°$ 的 T 形接头，其斜角角焊缝（图 7.1.4）的强度应按公式(7.1.3-1)至公式(7.1.3-3)计算，但取 $\beta_f=1.0$，其计算厚度为：$h_e=h_f\cos\frac{\alpha}{2}$（根部间隙 b、b_1 或 $b_2\leqslant1.5$mm）或 $h_e=\left[h_f-\frac{b\ (或\ b_1、b_2)}{\sin\alpha}\right]\cos\frac{\alpha}{2}$（$b$、$b_1$ 或 $b_2>1.5$mm 但$\leqslant$5mm）。

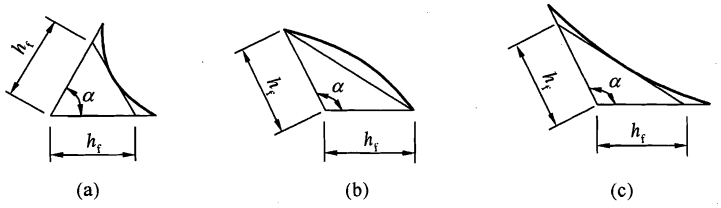

图 7.1.4-1 T 形接头的斜角角焊缝截面

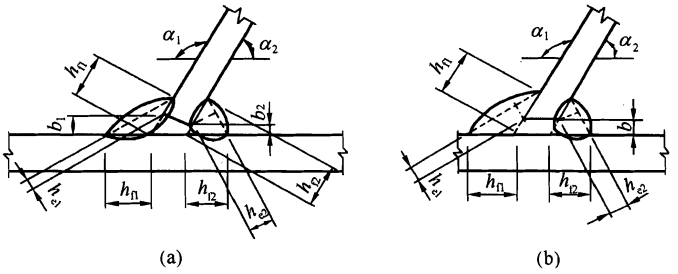

图 7.1.4-2　T 形接头的根部间隙和焊缝截面

7.1.5　部分焊透的对接焊缝（图 7.1.5a、b、d、e）和 T 形对接与角接组合焊缝（图 7.1.5c）的强度，应按角焊缝的计算公式（7.1.3-1）至公式（7.1.3-3）计算，在垂直于焊缝长度方向的压力作用下，取 $\beta_f=1.22$，其他受力情况取 $\beta_f=1.0$，其计算厚度应采用：

V 形坡口（图 7.1.5a）：当 $\alpha\geqslant 60°$ 时，$h_e=s$；当 $\alpha<60°$ 时，$h_e=0.75s$。

单边 V 形和 K 形坡口（图 7.1.5b、c）：当 $\alpha=45°\pm5°$，$h_e=s-3$。

U 形、J 形坡口（图 7.1.5d、e）：$h_e=s$。

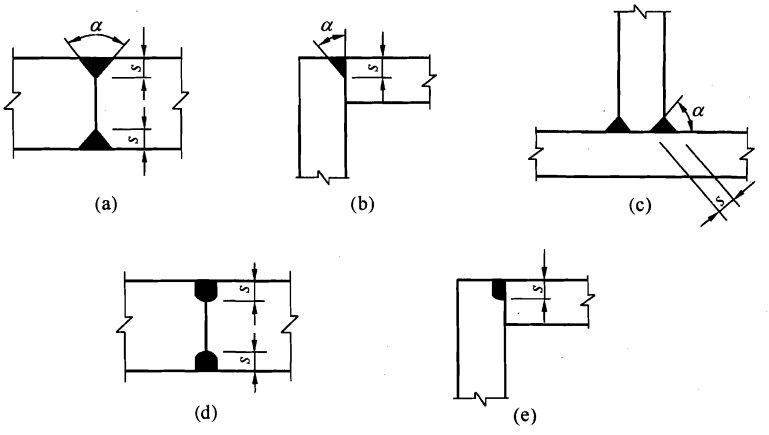

图 7.1.5　部分焊透的对接焊缝和其与角焊缝的组合焊缝截面

s 为坡口深度，即根部至焊缝表面（不考虑余高）的最短距离（mm）；α 为 V 形、单边 V 形或 K 形坡口角度。

当熔合线处焊缝截面边长等于或接近于最短距离 s 时（图 7.1.5b、c、e），抗剪强度设计值应按角焊缝的强度设计值乘以 0.9。

7.2　紧固件（螺栓、铆钉等）连接

7.2.1　普通螺栓、锚栓和铆钉连接应按下列规定计算：

1　在普通螺栓或铆钉受剪的连接中，每个普通螺栓或铆钉的承载力设计值应取受剪和承压承载力设计值中的较小者。

受剪承载力设计值：

普通螺栓
$$N_v^b = n_v \frac{\pi d^2}{4} f_v^b \tag{7.2.1-1}$$

铆钉
$$N_v^r = n_v \frac{\pi d_0^2}{4} f_v^r \tag{7.2.1-2}$$

承压承载力设计值：

普通螺栓
$$N_c^b = d \sum t \cdot f_c^b \tag{7.2.1-3}$$

铆钉
$$N_c^r = d_0 \sum t \cdot f_c^r \tag{7.2.1-4}$$

式中 n_v——受剪面数目；

d——螺栓杆直径；

d_0——铆钉孔直径；

$\sum t$——在不同受力方向中一个受力方向承压构件总厚度的较小值；

f_v^b、f_c^b——螺栓的抗剪和承压强度设计值；

f_v^r、f_c^r——铆钉的抗剪和承压强度设计值。

2 在普通螺栓、锚栓或铆钉杆轴方向受拉的连接中，每个普通螺栓、锚栓或铆钉的承载力设计值应按下列公式计算：

普通螺栓
$$N_t^b = \frac{\pi d_e^2}{4} f_t^b \tag{7.2.1-5}$$

锚栓
$$N_t^a = \frac{\pi d_e^2}{4} f_t^a \tag{7.2.1-6}$$

铆钉
$$N_t^r = \frac{\pi d_0^2}{4} f_t^r \tag{7.2.1-7}$$

式中 d_e——螺栓或锚栓在螺纹处的有效直径；

f_t^b、f_t^a、f_t^r——普通螺栓、锚栓和铆钉的抗拉强度设计值。

3 同时承受剪力和杆轴方向拉力的普通螺栓和铆钉，应分别符合下列公式的要求：

普通螺栓
$$\sqrt{\left(\frac{N_v}{N_v^b}\right)^2 + \left(\frac{N_t}{N_t^b}\right)^2} \leqslant 1 \tag{7.2.1-8}$$

$$N_v \leqslant N_c^b \tag{7.2.1-9}$$

铆钉
$$\sqrt{\left(\frac{N_v}{N_v^r}\right)^2 + \left(\frac{N_t}{N_t^r}\right)^2} \leqslant 1 \tag{7.2.1-10}$$

$$N_v \leqslant N_c^r \tag{7.2.1-11}$$

式中 N_v、N_t——某个普通螺栓或铆钉所承受的剪力和拉力；

N_v^b、N_t^b、N_c^b—— 一个普通螺栓的受剪、受拉和承压承载力设计值；

N_v^r、N_t^r、N_c^r—— 一个铆钉的受剪、受拉和承压承载力设计值。

7.2.2 高强度螺栓摩擦型连接应按下列规定计算：

1 在抗剪连接中，每个高强度螺栓的承载力设计值应按下式计算：
$$N_v^b = 0.9 n_f \mu P \tag{7.2.2-1}$$

式中 n_f——传力摩擦面数目；

μ——摩擦面的抗滑移系数，应按表 7.2.2-1 采用；

P—— 一个高强度螺栓的预拉力，应按表 7.2.2-2 采用。

表 7.2.2-1　摩擦面的抗滑移系数 μ

在连接处构件接触面的处理方法	构件的钢号		
	Q235 钢	Q345 钢、Q390 钢	Q420 钢
喷砂（丸）	0.45	0.50	0.50
喷砂（丸）后涂无机富锌漆	0.35	0.40	0.40
喷砂（丸）后生赤锈	0.45	0.50	0.50
钢丝刷清除浮锈或未经处理的干净轧制表面	0.30	0.35	0.40

表 7.2.2-2　一个高强度螺栓的预拉力 P（kN）

螺栓的性能等级	螺栓公称直径（mm）					
	M16	M20	M22	M24	M27	M30
8.8 级	80	125	150	175	230	280
10.9 级	100	155	190	225	290	355

2　在螺栓杆轴方向受拉的连接中，每个高强度螺栓的承载力设计值取 $N_t^b=0.8P$。

3　当高强度螺栓摩擦型连接同时承受摩擦面间的剪力和螺栓杆轴方向的外拉力时，其承载力应按下式计算：

$$\frac{N_v}{N_v^b}+\frac{N_t}{N_t^b}\leqslant 1 \tag{7.2.2-2}$$

式中　N_v、N_t——某个高强度螺栓所承受的剪力和拉力；

N_v^b、N_t^b—— 一个高强度螺栓的受剪、受拉承载力设计值。

7.2.3　高强度螺栓承压型连接应按下列规定计算：

1　承压型连接的高强度螺栓的预拉力 P 应与摩擦型连接高强度螺栓相同。连接处构件接触面应清除油污及浮锈。

高强度螺栓承压型连接不应用于直接承受动力荷载的结构。

2　在抗剪连接中，每个承压型连接高强度螺栓的承载力设计值的计算方法与普通螺栓相同，但当剪切面在螺纹处时，其受剪承载力设计值应按螺纹处的有效面积进行计算。

3　在杆轴方向受拉的连接中；每个承压型连接高强度螺栓的承载力设计值的计算方法与普通螺栓相同。

4　同时承受剪力和杆轴方向拉力的承压型连接的高强度螺栓，应符合下列公式的要求：

$$\sqrt{\left(\frac{N_v}{N_v^b}\right)^2+\left(\frac{N_t}{N_t^b}\right)^2}\leqslant 1 \tag{7.2.3-1}$$

$$N_v\leqslant N_c^b/1.2 \tag{7.2.3-2}$$

式中　N_v、N_t——某个高强度螺栓所承受的剪力和拉力；

N_v^b、N_t^b、N_c^b—— 一个高强度螺栓的受剪、受拉和承压承载力设计值。

7.2.4　在构件的节点处或拼接接头的一端，当螺栓或铆钉沿轴向受力方向的连接长度 l_1 大于 $15d_0$ 时，应将螺栓或铆钉的承载力设计值乘以折减系数 $\left(1.1-\frac{l_1}{150d_0}\right)$。当 l_1 大于

$60°d_0$ 时，折减系数为 0.7，d_0 为孔径。

7.2.5 在下列情况的连接中，螺栓或铆钉的数目应予增加：

1 一个构件借助填板或其他中间板件与另一构件连接的螺栓（摩擦型连接的高强度螺栓除外）或铆钉数目，应按计算增加 10%。

2 当采用搭接或拼接板的单面连接传递轴心力，因偏心引起连接部位发生弯曲时，螺栓（摩擦型连接的高强度螺栓除外）或铆钉数目，应按计算增加 10%。

3 在构件的端部连接中，当利用短角钢连接型钢（角钢或槽钢）的外伸肢以缩短连接长度时，在短角钢两肢中的一肢上，所用的螺栓或铆钉数目应按计算增加 50%。

4 当铆钉连接的铆合总厚度超过铆钉孔径的 5 倍时，总厚度每超过 2mm，铆钉数目应按计算增加 1%（至少应增加一个铆钉），但铆合总厚度不得超过铆钉孔径的 7 倍。

7.2.6 连接薄钢板采用的自攻螺钉、钢拉铆钉（环槽铆钉）、射钉等应符合有关标准的规定。

7.3 组合工字梁翼缘连接

7.3.1 组合工字梁翼缘与腹板的双面角焊缝连接，其强度应按下式计算：

$$\frac{1}{2h_e}\sqrt{\left(\frac{VS_f}{I}\right)^2+\left(\frac{\psi F}{\beta_f l_z}\right)^2}\leqslant f_f^w \tag{7.3.1}$$

式中 S_f——所计算翼缘毛截面对梁中和轴的面积矩；

I——梁的毛截面惯性矩。

公式（7.3.1）中，F、ψ 和 l_z 应按 4.1.3 条采用；β_f 应按 7.1.3 条采用。

注：1 当梁上翼缘受有固定集中荷载时，宜在该处设置顶紧上翼缘的支承加劲肋，此时取 $F=0$。

2 当腹板与翼缘的连接焊缝采用焊透的 T 形对接与角接组合焊缝时，其强度可不计算。

7.3.2 组合工字梁翼缘与腹板的铆钉（或摩擦型连接高强度螺栓）的承载力，应按下式计算：

$$a\sqrt{\left(\frac{VS_f}{I}\right)^2+\left[\frac{\alpha_1\psi F}{l_z}\right]^2}\leqslant n_1 N_{min}^r \text{ 或 } n_1 N_v^b \tag{7.3.2}$$

式中 a——翼缘铆钉（或螺栓）间距；

α_1——系数；当荷载 F 作用于梁上翼缘而腹板刨平顶紧上翼缘板时，$\alpha_1=0.4$；其他情况，$\alpha_1=1.0$；

n_1——在计算截面处铆钉（或螺栓）的数量；

N_{min}^r—— 一个铆钉的受剪和承压承载力设计值的较小值；

N_v^b—— 一个摩擦型连接的高强度螺栓的受剪承载力设计值。

注：当梁上翼缘受有固定集中荷载时，宜在该处设置顶紧上翼缘的支承加劲肋，此时取 $F=0$。

7.4 梁与柱的刚性连接

7.4.1 当工字形梁翼缘采用焊透的 T 形对接焊缝而腹板采用摩擦型连接高强度螺栓或焊缝与 H 形柱的翼缘相连，满足下列要求时，柱的腹板可不设置横向加劲肋：

1 在梁的受压翼缘处，柱腹板厚度 t_w 应同时满足：

$$t_w \geqslant \frac{A_{fc} f_b}{b_e f_c} \tag{7.4.1-1}$$

$$t_w \geqslant \frac{h_c}{30}\sqrt{\frac{f_{yc}}{235}} \tag{7.4.1-2}$$

式中 A_{fc}——梁受压翼缘的截面积；

f_c——柱钢材抗拉、抗压强度设计值；

f_b——梁钢材抗拉、抗压强度设计值；

b_e——在垂直于柱翼缘的集中压力作用下，柱腹板计算高度边缘处压应力的假定分布长度，参照公式（4.1.3-2）计算；

h_c——柱腹板的宽度；

f_{yc}——柱钢材屈服点。

2 在梁的受拉翼缘处，柱翼缘板的厚度 t_c 应满足：

$$t_c \geqslant 0.4\sqrt{A_{ft} f_b / f_c} \tag{7.4.1-3}$$

式中 A_{ft}——梁受拉翼缘的截面积。

7.4.2 由柱翼缘与横向加劲肋包围的柱腹板节点域应按下列规定计算：

1 抗剪强度应按下式计算：

$$\frac{M_{b1} + M_{b2}}{V_p} \leqslant \frac{4}{3} f_v \tag{7.4.2-1}$$

式中 M_{b1}、M_{b2}——分别为节点两侧梁端弯矩设计值；

V_p——节点域腹板的体积。柱为 H 形或工字形截面时，$V_p = h_p h_c t_w$，柱为箱形截面时，$V_p = 1.8 h_b h_c t_w$；

t_w——柱腹板厚度；

h_b——梁腹板高度。

当柱腹板节点域不满足公式（7.4.2-1）的要求时，对 H 形或工字形组合柱宜将腹板在节点域加厚。腹板加厚的范围应伸出梁上、下翼缘外不小于 150mm 处。对轧制 H 型钢或工字钢柱，亦可贴焊补强板加强。补强板上下边可不伸过柱腹板的横向加劲肋或伸过加劲肋之外各 150mm。补强板与加劲肋连接的角焊缝应能传递补强板所分担的剪力，焊缝的计算厚度不宜小于 5mm。当补强板伸过加劲肋时，加劲肋仅与补强板焊接，此焊缝应能将加劲肋传来的剪力全部传给补强板，补强板的厚度及其连接强度，应按所承受的力进行设计。补强板侧边应用角焊缝与柱翼缘相连，其板面尚应采用塞焊与柱腹板连成整体，塞焊点之间的距离不应大于较薄焊件厚度的 $21\sqrt{235/f_y}$ 倍。对轻型结构亦可采用斜向加劲肋加强。

2 腹板的厚度 t_w 应满足下式要求：

$$t_w \geqslant \frac{h_c + h_b}{90} \tag{7.4.2-2}$$

7.4.3 梁柱连接节点处柱腹板横向加劲肋应满足下列要求：

1 横向加劲肋应能传递梁翼缘传来的集中力，其厚度应为梁翼缘厚度的 0.5～1.0 倍；其宽度应符合传力、构造和板件宽厚比限值的要求。

2 横向加劲肋的中心线应与梁翼缘的中心线对准，并用焊透的 T 形对接焊缝与柱翼缘连接。当梁与 H 形或工字形截面柱的腹板垂直相连形成刚接时，横向加劲肋与柱腹板的连接也宜采用焊透对接焊缝。

3 箱形柱中的横向加劲隔板与柱翼缘的连接，宜采用焊透的 T 形对接焊缝，对无法进行电弧焊的焊缝，可采用熔化嘴电渣焊。

4 当采用斜向加劲肋来提高节点域的抗剪承载力时，斜向加劲肋及其连接应能传递柱腹板所能承担剪力之外的剪力。

7.5 连接节点处板件的计算

7.5.1 连接节点处板件在拉、剪作用下的强度应按下列公式计算：

$$\frac{N}{\sum(\eta_i A_i)} \leqslant f \tag{7.5.1-1}$$

$$\eta_i = \frac{1}{\sqrt{1+2\cos^2\alpha_i}} \tag{7.5.1-2}$$

式中 N——作用于板件的拉力；

A_i——第 i 段破坏面的截面积，$A_i = tl_i$；当为螺栓（或铆钉）连接时，应取净截面面积；

t——板件厚度；

l_i——第 i 破坏段的长度，应取板件中最危险的破坏线的长度（图 7.5.1）；

η_i——第 i 段的拉剪折算系数；

α_i——第 i 段破坏线与拉力轴线的夹角。

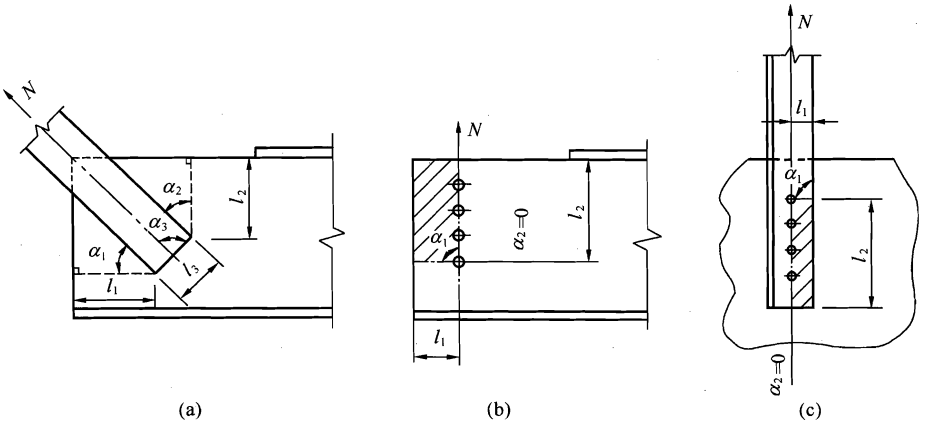

图 7.5.1 板件的拉、剪撕裂

(a) 焊缝连接；(b) 螺栓（铆钉）连接；(c) 螺栓（铆钉）连接

7.5.2 桁架节点板（杆件为轧制 T 形和双板焊接 T 形截面者除外）的强度除可按公式（7.5.1-1）计算外，也可用有效宽度法按下式计算：

$$\sigma = \frac{N}{b_e t} \leqslant f \tag{7.5.2}$$

式中 b_e——板件的有效宽度（图 7.5.2）；当用螺栓（或铆钉）连接时（图 7.5.2b），应减去孔径。

7.5.3 桁架节点板在斜腹杆压力作用下的稳定性可用下列方法进行计算：

1 对有竖腹杆相连的节点板，当 $c/t \leqslant 15\sqrt{235/f_y}$ 时（c 为受压腹杆连接肢端面中点沿腹杆轴线方向至弦杆的净距离），可不计算稳定。否则，应按附录 F 进行稳定计算。在任何情况下，c/t 不得大于 $22\sqrt{235/f_y}$。

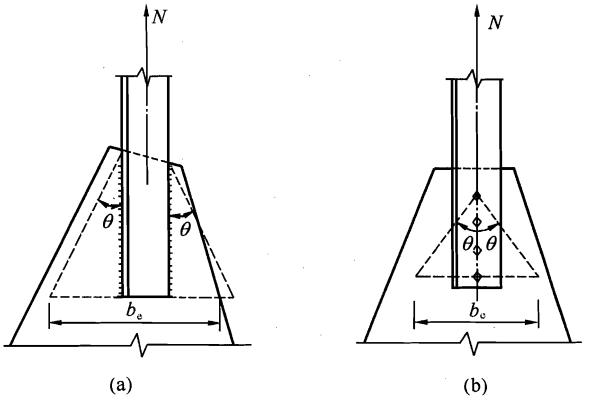

图 7.5.2 板件的有效宽度

注：θ 为应力扩散角，可取 30°。

2 对无竖腹杆相连的节点板，当 $c/t \leqslant 10\sqrt{235/f_y}$ 时，节点板的稳定承载力可取为 $0.8b_e tf$。当 $c/t > 10\sqrt{235/f_y}$ 时，应按本规范附录 F 进行稳定计算，但在任何情况下，c/t 不得大于 $17.5\sqrt{235/f_y}$。

7.5.4 当用 7.5.1～7.5.3 条方法计算桁架节点板时，尚应满足下列要求：

1 节点板边缘与腹杆轴线之间的夹角不应小于 15°；

2 斜腹杆与弦杆的夹角应在 30°～60°之间；

3 节点板的自由边长度 l_f 与厚度 t 之比不得大于 $60\sqrt{235/f_y}$，否则应沿自由边设加劲肋予以加强。

7.6 支　座

7.6.1 梁或桁架支于砌体或混凝土上的平板支座（参见图 8.4.12a），其底板应有足够面积将支座压力传给砌体或混凝土，厚度应根据支座反力对底板产生的弯矩进行计算。

7.6.2 弧形支座（图 7.6.2a）和辊轴支座（图 7.6.2b）中圆柱形弧面与平板为线接触，其支座反力 R 应满足下式要求：

$$R \leqslant 40ndlf^2/E \tag{7.6.2}$$

式中 d——对辊轴支座为辊轴直径，对弧形支座为弧形表面接触点曲率半径 r 的 2 倍；

n——辊轴数目，对弧形支座 $n=1$；

l——弧形表面或辊轴与平板的接触长度。

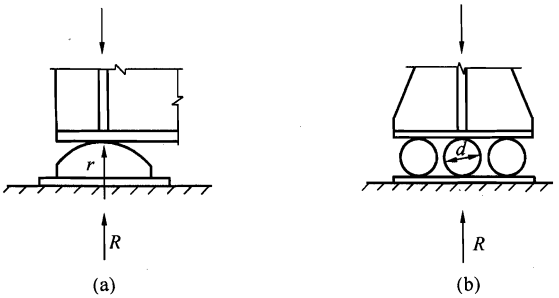

图 7.6.2 弧形支座与辊轴支座示意图

(a) 弧形支座；(b) 辊轴支座

7.6.3 铰轴式支座的圆柱形枢轴（图 7.6.3），当两相同半径的圆柱形弧面自由接触的中心角 $\theta \geqslant 90°$ 时，其承压应力

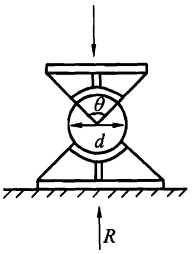

图 7.6.3 铰轴式支座示意图

应按下式计算：

$$\sigma = \frac{2R}{dl} \leqslant f \tag{7.6.3}$$

式中 d——枢轴直径；

l——枢轴纵向接触面长度。

7.6.4 对受力复杂或大跨度结构，为适应支座处不同转角和位移的需要，宜采用球形支座或双曲形支座。

7.6.5 为满足支座位移的要求采用橡胶支座时，应根据工程的具体情况和橡胶支座系列产品酌情选用。设计时还应考虑橡胶老化后能更换的可能性。

7.6.6 轴心受压柱或压弯柱的端部为铣平端时，柱身的最大压力直接由铣平端传递，其连接焊缝或螺栓应按最大压力的 15% 或最大剪力中的较大值进行抗剪计算；当压弯柱出现受拉区时，该区的连接尚应按最大拉力计算。

8 构 造 要 求

8.1 一 般 规 定

8.1.1 钢结构的构造应便于制作、运输、安装、维护并使结构受力简单明确，减小应力集中，避免材料三向受拉。以受风载为主的空腹结构，应尽量减小受风面积。

8.1.2 在钢结构的受力构件及其连接中，不宜采用：厚度小于4mm的钢板；壁厚小于3mm的钢管；截面小于L45×4或L56×36×4的角钢（对焊接结构），或截面小于L50×5的角钢（对螺栓连接或铆钉连接结构）。

8.1.3 焊接结构是否需要采用焊前预热或焊后热处理等特殊措施，应根据材质、焊件厚度、焊接工艺、施焊时气温以及结构的性能要求等综合因素来确定，并在设计文件中加以说明。

8.1.4 结构应根据其形式、组成和荷载的不同情况，设置可靠的支撑系统。在建筑物每一个温度区段或分期建设的区段中，应分别设置独立的空间稳定的支撑系统。

8.1.5 单层房屋和露天结构的温度区段长度（伸缩缝的间距），当不超过表8.1.5的数值时，一般情况可不考虑温度应力和温度变形的影响。

表8.1.5 温度区段长度值(m)

结构情况	纵向温度区段（垂直屋架或构架跨度方向）	横向温度区段（沿屋架或构架跨度方向）	
		柱顶为刚接	柱顶为铰接
采暖房屋和非采暖地区的房屋	220	120	150
热车间和采暖地区的非采暖房屋	180	100	125
露天结构	120	—	—

注：1 厂房柱为其他材料时，应按相应规范的规定设置伸缩缝。围护结构可根据具体情况参照有关规范单独设置伸缩缝。

2 无桥式吊车房屋的柱间支撑和有桥式吊车房屋吊车梁或吊车桁架以下的柱间支撑，宜对称布置于温度区段中部。当不对称布置时，上述柱间支撑的中点（两道柱间支撑时为两支撑距离的中点）至温度区段端部的距离不宜大于表8.1.5纵向温度区段长度的60%。

3 当有充分依据或可靠措施时，表中数字可予以增减。

8.2 焊 缝 连 接

8.2.1 焊缝金属应与主体金属相适应。当不同强度的钢材连接时，可采用与低强度钢材相适应的焊接材料。

8.2.2 在设计中不得任意加大焊缝，避免焊缝立体交叉和在一处集中大量焊缝，同时焊缝的布置应尽可能对称于构件形心轴。

焊件厚度大于20mm的角接接头焊缝，应采用收缩时不易引起层状撕裂的构造。

注：钢板的拼接当采用对接焊缝时，纵横两方向的对接焊缝，可采用十字形交叉或T形交叉；当为T形交叉时，交叉点的间距不得小于200mm。

8.2.3 对接焊缝的坡口形式，宜根据板厚和施工条件按有关现行国家标准的要求选用。

8.2.4 在对接焊缝的拼接处：当焊件的宽度不同或厚度在一侧相差4mm以上时，应分别在宽度方向或厚度方向从一侧或两侧做成坡度不大于1:2.5的斜角（图8.2.4）；当厚度不同时，焊缝坡口形式应根据较薄焊件厚度按第8.2.3条的要求取用。

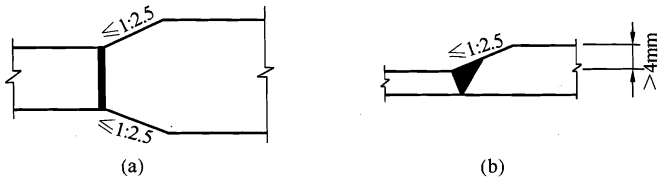

图8.2.4 不同宽度或厚度钢板的拼接

（a）不同宽度；（b）不同厚度

注：直接承受动力荷载且需要进行疲劳计算的结构，本条所指斜角坡度不应大于1:4。

8.2.5 当采用部分焊透的对接焊缝时，应在设计图中注明坡口的形式和尺寸，其计算厚度 h_e（mm）不得小于 $1.5\sqrt{t}$，t（mm）为焊件的较大厚度。

在直接承受动力荷载的结构中，垂直于受力方向的焊缝不宜采用部分焊透的对接焊缝。

8.2.6 角焊缝两焊脚边的夹角 α 一般为90°（直角角焊缝）。夹角 $\alpha>135°$ 或 $\alpha<60°$ 的斜角角焊缝，不宜用作受力焊缝（钢管结构除外）。

8.2.7 角焊缝的尺寸应符合下列要求：

1 角焊缝的焊脚尺寸 h_f（mm）不得小于 $1.5\sqrt{t}$，t（mm）为较厚焊件厚度（当采用低氢型碱性焊条施焊时，t 可采用较薄焊件的厚度）。但对埋弧自动焊，最小焊脚尺寸可减小1mm；对T形连接的单面角焊缝，应增加lmm。当焊件厚度等于或小于4mm时，则最小焊脚尺寸应与焊件厚度相同。

2 角焊缝的焊脚尺寸不宜大于较薄焊件厚度的1.2倍（钢管结构除外），但板件（厚度为 t）边缘的角焊缝最大焊脚尺寸，尚应符合下列要求：

1）当 $t\leqslant6$mm时，$h_f\leqslant t$；

2）当 $t>6$mm时，$h_f\leqslant t-(1\sim2)$ mm。

圆孔或槽孔内的角焊缝焊脚尺寸尚不宜大于圆孔直径或槽孔短径的1/3。

3 角焊缝的两焊脚尺寸一般为相等。当焊件的厚度相差较大且等焊脚尺寸不能符合本条第1、2款要求时，可采用不等焊脚尺寸，与较薄焊件接触的焊脚边应符合本条第2款的要求；与较厚焊件接触的焊脚边应符合本条第1款的要求。

4 侧面角焊缝或正面角焊缝的计算长度不得小于 $8h_f$ 和40mm。

5 侧面角焊缝的计算长度不宜大于 $60h_f$，当大于上述数值时，其超过部分在计算中不予考虑。若内力沿侧面角焊缝全长分布时，其计算长度不受此限。

8.2.8 在直接承受动力荷载的结构中，角焊缝表面应做成直线形或凹形。焊脚尺寸的比例：对正面角焊缝宜为1:1.5（长边顺内力方向）；对侧面角焊缝可为1:1。

8.2.9 在次要构件或次要焊缝连接中，可采用断续角焊缝。断续角焊缝焊段的长度不得小于 $10h_f$ 或50mm，其净距不应大于 $15t$（对受压构件）或 $30t$（对受拉构件），t 为较薄

焊件的厚度。

8.2.10 当板件的端部仅有两侧面角焊缝连接时，每条侧面角焊缝长度不宜小于两侧面角焊缝之间的距离；同时两侧面角焊缝之间的距离不宜大于 $16t$（当 $t>12$mm）或 190mm（当 $t\leqslant 12$mm），t 为较薄焊件的厚度。

8.2.11 杆件与节点板的连接焊缝（图 8.2.11）宜采用两面侧焊，也可用三面围焊，对角钢杆件可采用 L 形围焊，所有围焊的转角处必须连续施焊。

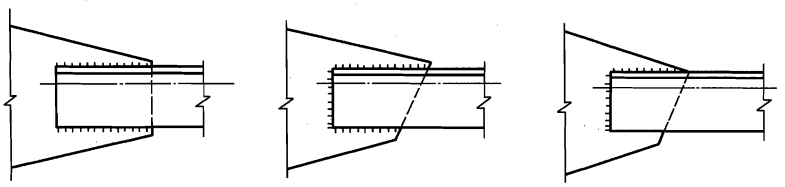

图 8.2.11 杆件与节点板的焊缝连接

(a) 两面侧焊；(b) 三面围焊；(c) L 形围焊

8.2.12 当角焊缝的端部在构件转角处做长度为 $2h_f$ 的绕角焊时，转角处必须连续施焊。

8.2.13 在搭接连接中，搭接长度不得小于焊件较小厚度的 5 倍，并不得小于 25mm。

8.3 螺栓连接和铆钉连接

8.3.1 每一杆件在节点上以及拼接接头的一端，永久性的螺栓（或铆钉）数不宜少于 2 个。对组合构件的缀条，其端部连接可采用 1 个螺栓（或铆钉）。

8.3.2 高强度螺栓孔应采用钻成孔。摩擦型连接的高强度螺栓的孔径比螺栓公称直径 d 大 1.5～2.0mm；承压型连接的高强度螺栓的孔径比螺栓公称直径 d 大 1.0～1.5mm。

8.3.3 在高强度螺栓连接范围内，构件接触面的处理方法应在施工图中说明。

8.3.4 螺栓或铆钉的距离应符合表 8.3.4 的要求。

表 8.3.4 螺栓或铆钉的最大、最小容许距离

名称	位置和方向			最大容许距离（取两者的较小值）	最小容许距离
中心间距	外排（垂直内力方向或顺内力方向）			$8d_0$ 或 $12t$	$3d_0$
	中间排	垂直内力方向		$16d_0$ 或 $24t$	
		顺内力方向	构件受压力	$12d_0$ 或 $18t$	
			构件受拉力	$16d_0$ 或 $24t$	
		沿对角线方向		—	
中心至构件边缘距离	顺内力方向			$4d_0$ 或 $8t$	$2d_0$
	垂直内力方向	剪切边或手工气割边			$1.5d_0$
		轧制边、自动气割或锯割边	高强度螺栓		
			其他螺栓或铆钉		$1.2d_0$

注：1 d_0 为螺栓或铆钉的孔径，t 为外层较薄板件的厚度。

2 钢板边缘与刚性构件（如角钢、槽钢等）相连的螺栓或铆钉的最大间距，可按中间排的数值采用。

8.3.5 C 级螺栓宜用于沿其杆轴方向受拉的连接，在下列情况下可用于受剪连接：

1 承受静力荷载或间接承受动力荷载结构中的次要连接；

2 承受静力荷载的可拆卸结构的连接；

3 临时固定构件用的安装连接。

8.3.6 对直接承受动力荷载的普通螺栓受拉连接应采用双螺帽或其他能防止螺帽松动的有效措施。

8.3.7 当型钢构件拼接采用高强度螺栓连接时，其拼接件宜采用钢板。

8.3.8 沉头和半沉头铆钉不得用于沿其杆轴方向受拉的连接。

8.3.9 沿杆轴方向受拉的螺栓（或铆钉）连接中的端板（法兰板），应适当增强其刚度（如加设加劲肋），以减少撬力对螺栓（或铆钉）抗拉承载力的不利影响。

8.4 结 构 构 件

（Ⅰ）柱

8.4.1 在缀件面剪力较大或宽度较大的格构式柱，宜采用缀条柱。

缀板柱中，同一截面处缀板（或型钢横杆）的线刚度之和不得小于柱较大分肢线刚度的6倍。

8.4.2 当实腹式柱的腹板计算高度 h_0。与厚度 t_w。之比 $h_0/t_w>80\sqrt{235/f_y}$时，应采用横向加劲肋加强，其间距不得大于 $3h_0$。

横向加劲肋的尺寸和构造应按第4.3.6条的有关规定采用。

8.4.3 格构式柱或大型实腹式柱，在受有较大水平力处和运送单元的端部应设置横隔，横隔的间距不得大于柱截面长边尺寸的9倍和8m。

（Ⅱ）桁　　架

8.4.4 焊接桁架应以杆件形心线为轴线，螺栓（或铆钉）连接的桁架可采用靠近杆件形心线的螺栓（或铆钉）准线为轴线，在节点处各轴线应交于一点（钢管结构除外）。

当桁架弦杆的截面变化时，如轴线变动不超过较大弦杆截面高度的5%，可不考虑其影响。

8.4.5 分析桁架杆件内力时，可将节点视为铰接。对用节点板连接的桁架，当杆件为H形、箱形等刚度较大的截面，且在桁架平面内的杆件截面高度与其几何长度（节点中心间的距离）之比大于1/10（对弦杆）或大于1/15（对腹杆）时，应考虑节点刚性所引起的次弯矩。

8.4.6 当焊接桁架的杆件用节点板连接时，弦杆与腹杆、腹杆与腹杆之间的间隙不应小于20mm，相邻角焊缝焊趾间净距不应小于5mm。

当桁架杆件不用节点板连接时，相邻腹杆连接角焊缝焊趾间净距不应小于5mm（钢管结构除外）。

8.4.7 节点板厚度一般根据所连接杆件内力的大小确定，但不得小于6mm。节点板的平面尺寸应适当考虑制作和装配的误差。

8.4.8 跨度大于36m的两端铰支承的桁架，在竖向荷载作用下，下弦弹性伸长对支承构件产生水平推力时，应考虑其影响。

（Ⅲ）梁

8.4.9 焊接梁的翼缘一般用一层钢板做成，当采用两层钢板时，外层钢板与内层钢板厚度之比宜为0.5～1.0。不沿梁通长设置的外层钢板，其理论截断点处的外伸长度 l_1 应符

合下列要求：

端部有正面角焊缝：

当 $h_f \geqslant 0.75t$ 时：　　$l_1 \geqslant b$

当 $h_f < 0.75t$ 时：　　$l_1 \geqslant 1.5b$

端部无正面角焊缝：　　$l_1 \geqslant 2b$

b 和 t 分别为外层冀缘板的宽度和厚度；h_f 为侧面角焊缝和正面角焊缝的焊脚尺寸。

8.4.10 铆接（或高强度螺栓摩擦型连接）梁的翼缘板不宜超过三层，翼缘角钢面积不宜少于整个翼缘面积的 30%，当采用最大型号的角钢仍不能符合此要求时，可加设腋板（图 8.4.10）。此时角钢与腋板面积之和不应少于翼缘总面积的 30%。

当翼缘板不沿梁通长设置时，理论截断点处外伸长度内的铆钉（或摩擦型连接的高强度螺栓）数目，应按该板 1/2 净截面面积的抗拉、抗压承载力进行计算。

8.4.11 焊接梁的横向加劲肋与翼缘板相接处应切角，当切成斜角时，其宽约 $b_s/3$（但不大于 40mm），高约 $b_s/2$（但不大于 60mm），见图 8.4.11，b_s 为加劲肋的宽度。

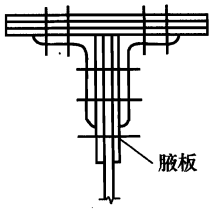

图 8.4.10　铆接（或高强度螺栓摩擦型连接）梁的翼缘截面

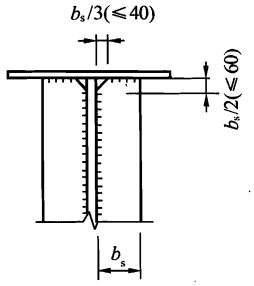

图 8.4.11　加劲肋的切角

8.4.12 梁的端部支承加劲肋的下端，按端面承压强度设计值进行计算时，应刨平顶紧，其中突缘加劲板（图 8.4.12b）的伸出长度不得大于其厚度的 2 倍。

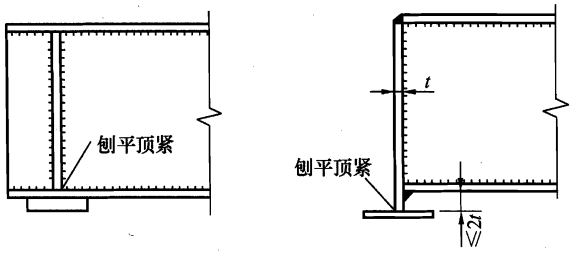

图 8.4.12　梁的支座

(a) 平板支座；(b) 突缘支座

(Ⅳ) 柱　　脚

8.4.13 柱脚锚栓不宜用以承受柱脚底部的水平反力，此水平反力由底板与混凝土基础间的摩擦力（摩擦系数可取 0.4）或设置抗剪键承受。

8.4.14 柱脚锚栓埋置在基础中的深度，应使锚栓的拉力通过其和混凝土之间的粘结力传递。当埋置深度受到限制时，则锚栓应牢固地固定在锚板或锚梁上，以传递锚栓的全部拉

力，此时锚栓与混凝土之间的粘结力可不予考虑。

8.4.15 插入式柱脚中，钢柱插入混凝土基础杯口的最小深度 d_{in} 可按表 8.4.15 取用，但不宜小于 500mm，亦不宜小于吊装时钢柱长度的 1/20。

表 8.4.15 钢柱插入杯口的最小深度

柱截面形式	实腹柱	双肢格构柱（单杯口或双杯口）
最小插入深度 d_{in}	$1.5h_c$ 或 $1.5d_c$	$0.5h_c$ 和 $1.5b_c$（或 d_c）的较大值

注：1 h_c 为柱截面高度（长边尺寸）；b_c 为柱截面宽度；d_c 为圆管柱的外径。

2 钢柱底端至基础杯口底的距离一般采用 50mm，当有柱底板时，可采用 200mm。

8.4.16 预埋入混凝土构件的埋入式柱脚，其混凝土保护层厚度以及外包式柱脚外包混凝土的厚度均不应小于 180mm。

钢柱的埋入部分和外包部分均宜在柱的翼缘上设置圆柱头焊钉（栓钉），其直径不得小于 16mm，水平及竖向中心距不得大于 200mm。

埋入式柱脚在埋入部分的顶部应设置水平加劲肋或隔板。

8.5 对吊车梁和吊车桁架（或类似结构）的要求

8.5.1 焊接吊车梁的翼缘板宜用一层钢板，当采用两层钢板时，外层钢板宜沿梁通长设置，并应在设计和施工中采取措施使上翼缘两层钢板紧密接触。

8.5.2 支承夹钳或刚性料耙硬钩吊车以及类似吊车的结构，不宜采用吊车桁架和制动桁架。

8.5.3 焊接吊车桁架应符合下列要求：

1 在桁架节点处，腹杆与弦杆之间的间隙 a 不宜小于 50mm，节点板的两侧边宜做成半径 r 不小于 60mm 的圆弧；节点板边缘与腹杆轴线的夹角 θ 不应小于 30°（图 8.5.3-1）；节点板与角钢弦杆的连接焊缝，起落弧点应至少缩进 5mm（图 8.5.3-1a）；节点板与 H 形截面弦杆的 T 形对接与角接组合焊缝应予焊透，圆弧处不得有起落弧缺陷，其中重级工作制吊车桁架的圆弧处应予打磨，使之与弦杆平缓过渡（图 8.5.3-1b）。

2 杆件的填板当用焊缝连接时，焊缝起落弧点应缩进至少 5mm（图 8.5.3-1c），重级工作制吊车桁架杆件的填板应采用高强度螺栓连接。

3 当桁架杆件为 H 形截面时，节点构造可采用图 8.5.3-2 的形式。

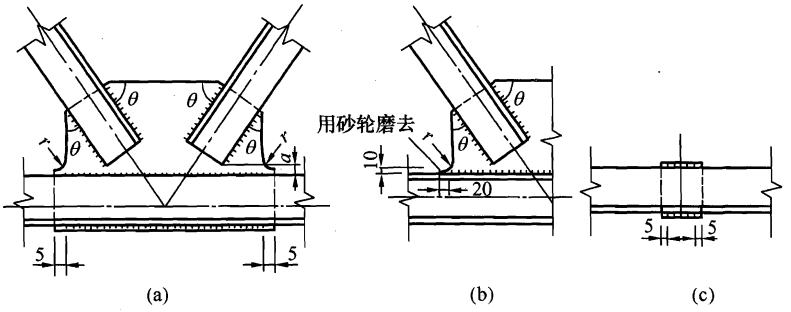

图 8.5.3-1 吊车桁架节点（一）

8.5.4 吊车梁翼缘板或腹板的焊接拼接应采用加引弧板和引出板的焊透对接焊缝，引弧板和引出板割去处应予打磨平整。焊接吊车梁和焊接吊车桁架的工地整段拼接应采用焊接或高强度螺栓的摩擦型连接。

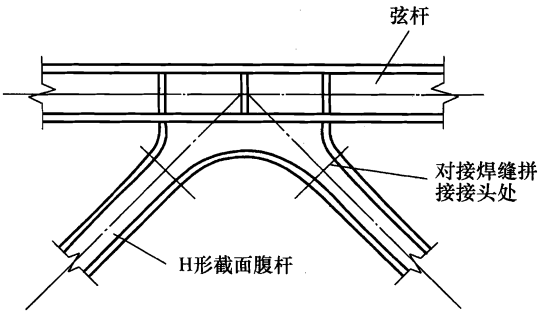

图 8.5.3-2 吊车桁架节点（二）

8.5.5 在焊接吊车梁或吊车桁架中，对 7.1.1 条中要求焊透的 T 形接头对接与角接组合焊缝形式宜如图 8.5.5 所示。

8.5.6 吊车梁横向加劲肋的宽度不宜小于 90mm。在支座处的横向加劲肋应在腹板两侧成对设置，并与梁上下翼缘刨平顶紧。中间横向加劲肋的上端应与梁上翼缘刨平顶紧，在重级工作制吊车梁中，中间横向加劲肋亦应在腹板两侧成对布置，而中、轻级工作制吊车梁则可单侧设置或两侧错开设置。

在焊接吊车梁中，横向加劲肋（含短加劲肋）不得与受拉翼缘相焊，但可与受压翼缘焊接。端加劲肋可与梁上下翼缘相焊，中间横向加劲肋的下端宜在距受拉下翼缘 50～100mm 处断开，其与腹板的连接焊缝不宜在肋下端起落弧。

当吊车梁受拉翼缘（或吊车桁架下弦）与支撑相连时，不宜采用焊接。

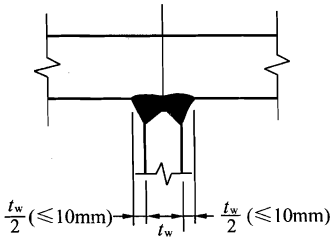

图 8.5.5 焊透的 T 形接头对接与角接组合焊缝

8.5.7 直接铺设轨道的吊车桁架上弦，其构造要求应与连续吊车梁相同。

8.5.8 重级工作制吊车梁中，上翼缘与柱或制动桁架传递水平力的连接宜采用高强度螺栓的摩擦型连接，而上翼缘与制动梁的连接，可采用高强度螺栓摩擦型连接或焊缝连接。

吊车梁端部与柱的连接构造应设法减少由于吊车梁弯曲变形而在连接处产生的附加应力。

8.5.9 当吊车桁架和重级工作制吊车梁跨度等于或大于 12m，或轻、中级工作制吊车梁跨度等于或大于 18m 时，宜设置辅助桁架和下翼缘（下弦）水平支撑系统。当设置垂直支撑时，其位置不宜在吊车梁或吊车桁架竖向挠度较大处。

对吊车桁架，应采取构造措施，以防止其上弦因轨道偏心而扭转。

8.5.10 重级工作制吊车梁的受拉翼缘板（或吊车桁架的受拉弦杆）边缘，宜为轧制边或自动气割边，当用手工气割或剪切机切割时，应沿全长刨边。

8.5.11 吊车梁的受拉翼缘（或吊车桁架的受拉弦杆）上不得焊接悬挂设备的零件，并不宜在该处打火或焊接夹具。

8.5.12 吊车钢轨的接头构造应保证车轮平稳通过。当采用焊接长轨且用压板与吊车梁连接时，压板与钢轨间应留有一定空隙（约 1mm），以使钢轨受温度作用后有纵向伸缩的可能。

8.6 大跨度屋盖结构

8.6.1 大跨度屋盖结构系指跨度等于或大于60m的屋盖结构，可采用桁架、刚架或拱等平面结构以及网架、网壳、悬索结构和索膜结构等空间结构。

8.6.2 大跨度屋盖结构应考虑构件变形、支承结构位移、边界约束条件和温度变化等对其内力产生的影响；同时可根据结构的具体情况采用能适应变形的支座以释放附加内力。

8.6.3 对有悬挂吊车的屋架，按永久和可变荷载标准值计算的挠度容许值可取跨度的1/500,按可变荷载标准值计算时可取1/600。对无悬挂吊车的屋架，按永久和可变荷载标准值计算的挠度容许值可取跨度的1/250；当有吊天棚时，按可变荷载标准值计算的挠度容许值可取跨度的1/500。

8.6.4 大跨度屋盖结构当杆件内力较大或动力荷载较大时，其节点宜采用高强度螺栓的摩擦型连接（管结构除外）。

8.6.5 对大跨度屋盖结构应进行吊装阶段的验算，吊装方案的选定和吊点位置等都应通过计算确定，以保证每个安装阶段屋盖结构的强度和整体稳定。

8.7 提高寒冷地区结构抗脆断能力的要求

8.7.1 结构形式和加工工艺的选择应尽量减少结构的应力集中。在工作温度等于或低于－30℃的地区，焊接构件宜采用较薄的组成板件。

8.7.2 在工作温度等于或低于－20℃的地区，焊接结构的构造宜符合下列要求：

1 在桁架节点板上，腹杆与弦杆相邻焊缝焊趾间净距不宜小于$2.5t$（t为节点板厚度）。

2 凡平接或T形对接的节点板，在对接焊缝处，节点板两侧宜做成半径r不小于60mm的圆弧并予打磨，使之平缓过渡（参见图8.5.3-1*b*）。

3 在构件拼接部位，应使拼接件自由段的长度不小于$5t$，t为拼接件厚度（图8.7.2）。

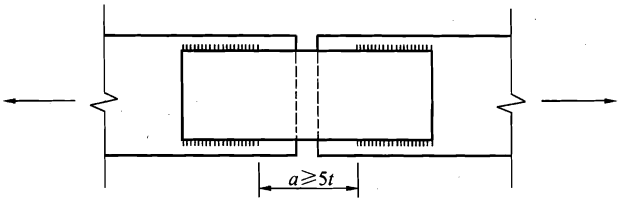

图8.7.2 盖板拼接处的构造

8.7.3 在工作温度等于或低于－20℃的地区，结构施工宜满足下列要求：

1 安装连接宜采用螺栓连接；

2 受拉构件的钢材边缘宜为轧制边或自动气割边。对厚度大于10mm的钢材采用手工气割或剪切边时，应沿全长刨边；

3 应采用钻成孔或先冲后扩钻孔；

4 对接焊缝的质量等级不得低于二级。

8.8 制作、运输和安装

8.8.1 结构运送单元的划分，除应考虑结构受力条件外，尚应注意经济合理，便于运输、堆放和易于拼装。

8.8.2 结构的安装连接应采用传力可靠、制作方便、连接简单、便于调整的构造形式。

8.8.3 安装连接采用焊接时，应考虑定位措施，将构件临时固定。

8.9 防护和隔热

8.9.1 钢结构除必须采取防锈措施（除锈后涂以油漆或金属镀层等）外，尚应在构造上尽量避免出现难于检查、清刷和油漆之处以及能积留湿气和大量灰尘的死角或凹槽。闭口截面构件应沿全长和端部焊接封闭。

钢结构防锈和防腐蚀采用的涂料、钢材表面的除锈等级以及防腐蚀对钢结构的构造要求等，应符合现行国家标准《工业建筑防腐蚀设计规范》GB 50046 和《涂装前钢材表面锈蚀等级和防锈等级》GB/T 8923 的规定。在设计文件中应注明所要求的钢材除锈等级和所要用的涂料（或镀层）及涂（镀）层厚度。

除有特殊需要外，设计中一般不应因考虑锈蚀而再加大钢材截面的厚度。

8.9.2 设计使用年限大于或等于 25 年的建筑物，对使用期间不能重新油漆的结构部位应采取特殊的防锈措施。

8.9.3 柱脚在地面以下的部分应采用强度等级较低的混凝土包裹（保护层厚度不应小于 50mm），并应使包裹的混凝土高出地面不小于 150mm。当柱脚底面在地面以上时，柱脚底面应高出地面不小于 100mm。

8.9.4 钢结构的防火应符合现行国家标准《建筑设计防火规范》GBJ 16 和《高层民用建筑设计防火规范》GB 50045 的要求，结构构件的防火保护层应根据建筑物的防火等级对各不同的构件所要求的耐火极限进行设计。防火涂料的性能、涂层厚度及质量要求应符合现行国家标准《钢结构防火涂料》GB 14907 和国家现行标准《钢结构防火涂料应用技术规范》CECS24 的规定。

8.9.5 受高温作用的结构，应根据不同情况采取下列防护措施：

1 当结构可能受到炽热熔化金属的侵害时，应采用砖或耐热材料做成的隔热层加以保护；

2 当结构的表面长期受辐射热达 150℃ 以上或在短时间内可能受到火焰作用时，应采取有效的防护措施（如加隔热层或水套等）。

9 塑 性 设 计

9.1 一 般 规 定

9.1.1 本章规定适用于不直接承受动力荷载的固端梁、连续梁以及由实腹构件组成的单层和两层框架结构。

9.1.2 采用塑性设计的结构或构件，按承载能力极限状态设计时，应采用荷载的设计值，考虑构件截面内塑性的发展及由此引起的内力重分配，用简单塑性理论进行内力分析。

按正常使用极限状态设计时，采用荷载的标准值，并按弹性理论进行计算。

9.1.3 按塑性设计时，钢材的力学性能应满足强屈比 $f_u/f_y \geqslant 1.2$，伸长率 $\delta_5 \geqslant 15\%$，相应于抗拉强度 f_u 的应变 ε_u 不小于 20 倍屈服点应变 ε_y。

9.1.4 塑性设计截面板件的宽厚比应符合表 9.1.4 的规定。

表 9.1.4 板件宽厚比

截面形式	翼缘	腹板
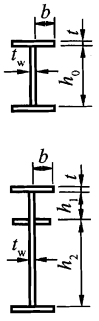	$\frac{b}{t} \leqslant 9\sqrt{\frac{235}{f_y}}$	当 $\frac{N}{Af} < 0.37$ 时： $\frac{h_0}{t_w}\left(\frac{h_1}{t_w}、\frac{h_2}{t_w}\right) \leqslant \left(72 - 100\frac{N}{Af}\right)\sqrt{\frac{235}{f_y}}$ 当 $\frac{N}{Af} \geqslant 0.37$ 时： $\frac{h_0}{t_w}\left(\frac{h_1}{t_w}、\frac{h_2}{t_w}\right) \leqslant 35\sqrt{\frac{235}{f_y}}$
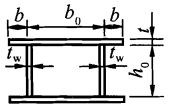	$\frac{b_0}{t} \leqslant 30\sqrt{\frac{235}{f_y}}$	与前项工字形截面的腹板相同

9.2 构件的计算

9.2.1 弯矩 M_x（对 H 形和工字形截面 x 轴为强轴）作用在一个主平面内的受弯构件，其弯曲强度应符合下式要求：

$$M_x \leqslant W_{pnx} f \tag{9.2.1}$$

式中 W_{pnx}——对 x 轴的塑性净截面模量。

9.2.2 受弯构件的剪力 V 假定由腹板承受，剪切强度应符合下式要求：

$$V \leqslant h_w t_w f_v \tag{9.2.2}$$

式中 h_w、t_w——腹板高度和厚度；

f_v——钢材抗剪强度设计值。

9.2.3 弯矩作用在一个主平面内的压弯构件，其强度应符合下列公式的要求：

当 $\frac{N}{A_n f} \leqslant 0.13$ 时：

$$M_x \leqslant W_{pnx} f \tag{9.2.3-1}$$

当 $\frac{N}{A_n f} > 0.13$ 时：

$$M_x \leqslant 1.15\left(1 - \frac{N}{A_n f}\right) W_{pnx} f \tag{9.2.3-2}$$

式中 A_n——净截面面积。

压弯构件的压力 N 不应大于 $0.6A_n f$，其剪切强度应符合公式（9.2.2）的要求。

9.2.4 弯矩作用在一个主平面内的压弯构件，其稳定性应符合下列公式的要求：

1 弯矩作用平面内：

$$\frac{N}{\varphi_x A f} + \frac{\beta_{mx} M_x}{W_{px} f\left(1 - 0.8\frac{N}{N'_{Ex}}\right)} \leqslant 1 \tag{9.2.4-1}$$

式中 W_{px}——对 x 轴的塑性毛截面模量。

φ_x、N'_{Ex}和 β_{mx}应按第 5.2.2 条计算弯矩作用平面内稳定的有关规定采用。

2 弯矩作用平面外：

$$\frac{N}{\varphi_y A f} + \eta \frac{\beta_{tx} M_x}{\varphi_b W_{px} f} \leqslant 1 \tag{9.2.4-2}$$

φ_y、φ_b、η 和 β_{tx} 应按 5.2.2 条计算弯矩作用平面外稳定的有关规定采用。

9.3 容许长细比和构造要求

9.3.1 受压构件的长细比不宜大于 $130\sqrt{235/f_y}$。

9.3.2 在构件出现塑性铰的截面处，必须设置侧向支承。该支承点与其相邻支承点间构件的长细比 λ_y 应符合下列要求：

当 $-1 \leqslant \frac{M_1}{W_{px} f} \leqslant 0.5$ 时：

$$\lambda_y \leqslant \left(60 - 40\frac{M_1}{W_{px} f}\right)\sqrt{\frac{235}{f_y}} \tag{9.3.2-1}$$

当 $0.5 < \frac{M_1}{W_{px} f} \leqslant 1.0$ 时：

$$\lambda_y \leqslant \left(45 - 10\frac{M_1}{W_{px} f}\right)\sqrt{\frac{235}{f_y}} \tag{9.3.2-2}$$

式中 λ_y——弯矩作用平面外的长细比，$\lambda_y = l_1/i_y$，l_1 为侧向支承点间距离，i_y 为截面回转半径；

M_1——与塑性铰相距为 l_1 的侧向支承点处的弯矩；当长度 l_1 内为同向曲率时，$M_1/(W_{px} f)$ 为正；当为反向曲率时，$M_1/(W_{px} f)$ 为负。

对不出现塑性铰的构件区段，其侧向支承点间距应由本规范第 4 章和第 5 章内有关弯

矩作用平面外的整体稳定计算确定。

9.3.3 用作减少构件弯矩作用平面外计算长度的侧向支撑，其轴心力应分别按本规范第4.2.6条或第5.2.8条确定。

9.3.4 所有节点及其连接应有足够的刚度，以保证在出现塑性铰前节点处各构件间的夹角保持不变。

构件拼接和构件间的连接应能传递该处最大弯矩设计值的1.1倍，且不得低于$0.25W_{px}f$。

9.3.5 当板件采用手工气割或剪切机切割时，应将出现塑性铰部位的边缘刨平。

当螺栓孔位于构件塑性铰部位的受拉板件上时，应采用钻成孔或先冲后扩钻孔。

10 钢 管 结 构

10.1 一 般 规 定

10.1.1 本章规定适用于不直接承受动力荷载，在节点处直接焊接的钢管（圆管、方管或矩形管）桁架结构。

10.1.2 圆钢管的外径与壁厚之比不应超过 $100(235/f_y)$；方管或矩形管的最大外缘尺寸与壁厚之比不应超过 $40\sqrt{235/f_y}$。

10.1.3 热加工管材和冷成型管材不应采用屈服强度 f_y 超过 345N/mm^2 以及屈强比 $f_y/f_u>0.8$ 的钢材，且钢管壁厚不宜大于 25mm。

10.1.4 在满足下列情况下，分析桁架杆件内力时可将节点视为铰接：

1 符合各类节点相应的几何参数的适用范围；

2 在桁架平面内杆件的节间长度或杆件长度与截面高度（或直径）之比不小于 12（主管）和 24（支管）时。

10.1.5 若支管与主管连接节点偏心不超过式（10.1.5）限制时，在计算节点和受拉主管承载力时，可忽略因偏心引起的弯矩的影响，但受压主管必须考虑此偏心弯矩 $M=\Delta N\times e$（ΔN 为节点两侧主管轴力之差值）的影响。

$$-0.55\leqslant e/h(\text{或 } e/d)\leqslant 0.25 \tag{10.1.5}$$

式中 e——偏心距，符合如图 10.1.5 所示；

d——圆主管外径；

h——连接平面内的矩形主管截面高度。

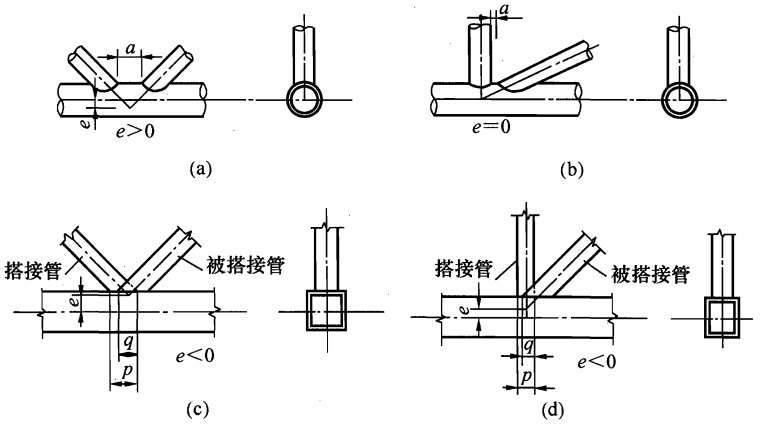

图 10.1.5 K形和N形管节点的偏心和间隙

(a) 有间隙的K形节点；(b) 有间隙的N形节点；

(c) 搭接的K形节点；(d) 搭接的N形节点

10.2 构 造 要 求

10.2.1 钢管节点的构造应符合下列要求：

1 主管的外部尺寸不应小于支管的外部尺寸，主管的壁厚不应小于支管壁厚，在支管与主管连接处不得将支管插入主管内；

2 主管与支管或两支管轴线之间的夹角不宜小于 30°；

3 支管与主管的连接节点处，除搭接型节点外，应尽可能避免偏心；

4 支管与主管的连接焊缝，应沿全周连续焊接并平滑过渡；

5 支管端部宜使用自动切管机切割，支管壁厚小于 6mm 时可不切坡口。

10.2.2 在有间隙的 K 形或 N 形节点中（图 10.1.5a、b），支管间隙 a 应不小于两支管壁厚之和。

10.2.3 在搭接的 K 形或 N 形节点中（图 10.1.5c、d），其搭接率 $O_v = q/p \times 100\%$ 应满足 $25\% \leqslant O_v \leqslant 100\%$，且应确保在搭接部分的支管之间的连接焊缝能可靠地传递内力。

10.2.4 在搭接节点中，当支管厚度不同时，薄壁管应搭在厚壁管上；当支管钢材强度等级不同时，低强度管应搭在高强度管上。

10.2.5 支管与主管之间的连接可沿全周用角焊缝或部分采用对接焊缝、部分采用角焊缝。支管管壁与主管管壁之间的夹角大于或等于 120°的区域宜用对接焊缝或带坡口的角焊缝。角焊缝的焊脚尺寸 h_f 不宜大于支管壁厚的 2 倍。

10.2.6 钢管构件在承受较大横向荷载的部位应采取适当的加强措施，防止产生过大的局部变形。构件的主要受力部位应避免开孔，如必须开孔时，应采取适当的补强措施。

10.3 杆件和节点承载力

10.3.1 直接焊接钢管结构中支管和主管的轴心内力设计值不应超过由本规范第 5 章确定的杆件承载力设计值。支管的轴心内力设计值亦不应超过节点承载力设计值。

10.3.2 在节点处，支管沿周边与主管相焊，焊缝承载力应等于或大于节点承载力。

在管结构中，支管与主管的连接焊缝可视为全周角焊缝按本规范公式（7.1.3-1）进行计算，但取 $\beta_f = 1$。角焊缝的计算厚度沿支管周长是变化的。当支管轴心受力时，平均计算厚度可取 $0.7h_f$。焊缝的计算长度可按下列公式计算：

1 在圆管结构中，取支管与主管相交线长度：

当 $d_i/d \leqslant 0.65$ 时：

$$l_w = (3.25d_i - 0.025d)\left(\frac{0.534}{\sin\theta_i} + 0.466\right) \tag{10.3.2-1}$$

当 $d_i/d > 0.65$ 时：

$$l_w = (3.81d_i - 0.389d)\left(\frac{0.534}{\sin\theta_i} + 0.466\right) \tag{10.3.2-2}$$

式中 d、d_i——分别为主管和支管外径；

θ_i——支管轴线与主管轴线的夹角。

2 在矩形管结构中，支管与主管交线的计算长度应按下列规定计算：

对于有间隙的 K 形和 N 形节点：

当 $\theta_i \geqslant 60°$ 时：

$$l_w = \frac{2h_i}{\sin\theta_i} + b_i \tag{10.3.2-3}$$

当 $\theta_i \leqslant 50°$ 时：

$$l_w = \frac{2h_i}{\sin\theta_i} + 2b_i \tag{10.3.2-4}$$

当 $50° < \theta_i < 60°$ 时，l_w 按插值法确定。

对于 T、Y 和 X 形节点（见图 10.3.4）：

$$l_w = \frac{2h_i}{\sin\theta_i} \tag{10.3.2-5}$$

式中 h_i、b_i——分别为支管的截面高度和宽度。

当支管为圆管、主管为矩形管时，焊缝计算长度取为支管与主管的相交线长度减去 d_i。

10.3.3 主管和支管均为圆管的直接焊接节点承载力应按下列规定计算，其适用范围为：$0.2 \leqslant \beta \leqslant 1.0$；$d_i/t_i \leqslant 60$；$d/t \leqslant 100$，$\theta \geqslant 30°$，$60° \leqslant \phi \leqslant 120°$（$\beta$ 为支管外径与主管外径之比；d_i、t_i 为支管的外径和壁厚；d、t 为主管的外径和壁厚；θ 为支管轴线与主管轴线之夹角；ϕ 为空间管节点支管的横向夹角，即支管轴线在主管横截面所在平面投影的夹角）。

为保证节点处主管的强度，支管的轴心力不得大于下列规定中的承载力设计值：

1 X 形节点（图 10.3.3a）；

1） 受压支管在管节点处的承载力设计值 N_{cX}^{pj} 应按下式计算：

$$N_{cX}^{pj} = \frac{5.45}{(1-0.81\beta)\sin\theta}\psi_n t^2 f \tag{10.3.3-1}$$

式中 ψ_n——参数，$\psi_n = 1 - 0.3\frac{\sigma}{f_y} - 0.3\left(\frac{\sigma}{f_y}\right)^2$，当节点两侧或一侧主管受拉时，则取 $\psi_n = 1$。

f——主管钢材的抗拉、抗压和抗弯强度设计值；

f_y——主管钢材的屈服强度；

σ——节点两侧主管轴心压应力的较小绝对值。

2） 受拉支管在管节点处的承载力设计值 N_{tX}^{pj} 应按下式计算：

$$N_{tX}^{pj} = 0.78\left(\frac{d}{t}\right)^{0.2} N_{cX}^{pj} \tag{10.3.3-2}$$

2 T 形（或 Y 形）节点（图 10.3.3b 和 c）：

1） 受压支管在管节点处的承载力设计值 N_{cT}^{pj} 应按下式计算：

$$N_{cT}^{pj} = \frac{11.51}{\sin\theta}\left(\frac{d}{t}\right)^{0.2}\psi_n\psi_d t^2 f \tag{10.3.3-3}$$

式中 ψ_d——参数；当 $\beta \leqslant 0.7$ 时，$\psi_d = 0.069 + 0.93\beta$；当 $\beta > 0.7$ 时，$\psi_d = 2\beta - 0.68$。

2） 受拉支管在管节点处的承载力设计值 N_{tT}^{pj} 应按下式计算：

当 $\beta \leqslant 0.6$ 时：

$$N_{tT}^{pj} = 1.4N_{cT}^{pj} \tag{10.3.3-4}$$

当 $\beta>0.6$ 时：

$$N_{tT}^{pj} = (2-\beta)N_{cT}^{pj} \tag{10.3.3-5}$$

3 K形节点（图 10.3.3d）：

1） 受压支管在管节点处的承载力设计值 N_{cK}^{pj} 应按下式计算：

$$N_{cK}^{pj} = \frac{11.51}{\sin\theta_c}\left(\frac{d}{t}\right)^{0.2}\psi_n\psi_d\psi_a t^2 f \tag{10.3.3-6}$$

式中 θ_c——受压支管轴线与主管轴线之夹角；

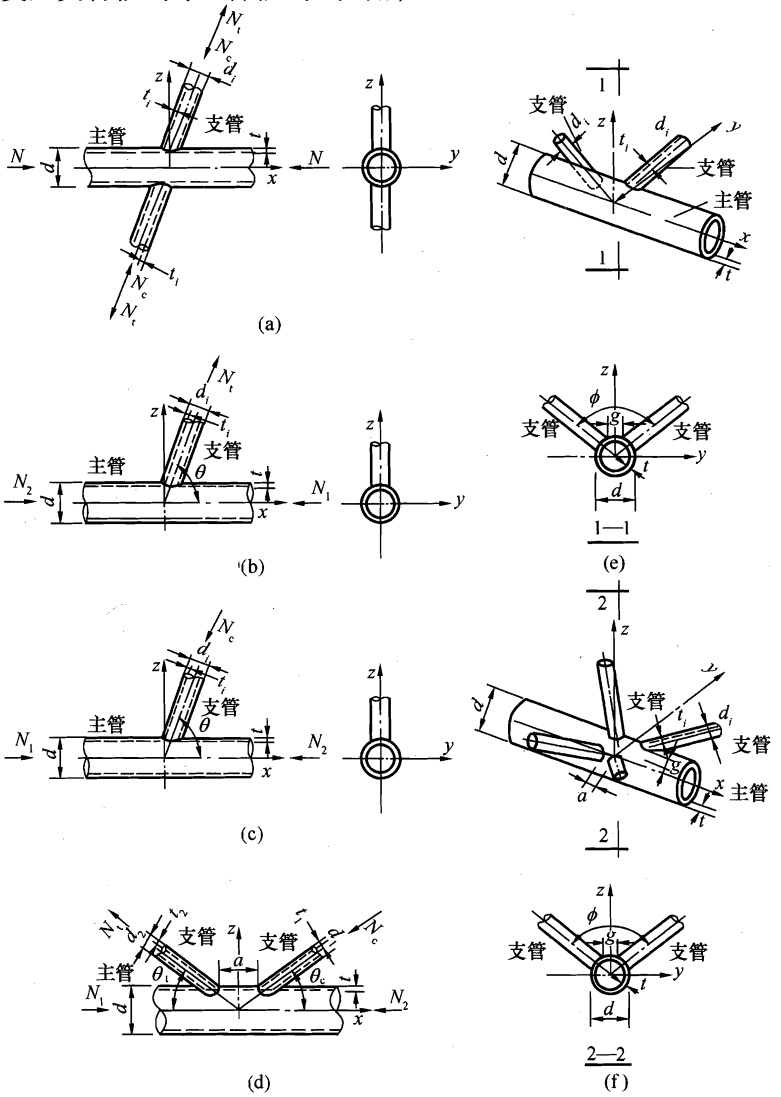

图 10.3.3 圆管结构的节点形式

(a) X形节点；(b) T形和Y形受拉节点；
(c) T形和Y形受压节点；(d) K形节点；(e) TT形节点；(f) KK形节点

ψ_a——参数，按下式计算：

$$\psi_a = 1 + \frac{2.19}{1 + \dfrac{7.5a}{d}}\left(1 - \frac{20.1}{6.6 + \dfrac{d}{t}}\right)(1 - 0.77\beta) \tag{10.3.3-7}$$

a——两支管间的间隙；当 $a<0$ 时，取 $a=0$。

2） 受拉支管在管节点处的承载力设计值 N_{tK}^{pj} 应按下式计算：

$$N_{tK}^{pj} = \frac{\sin\theta_c}{\sin\theta_t} N_{cK}^{pj} \tag{10.3.3-8}$$

式中 θ_t——受拉支管轴线与主管轴线之夹角。

4 TT 形节点（图 10.3.3e）：

1） 受压支管在管节点处的承载力设计值 N_{cTT}^{pj} 应按下式计算：

$$N_{cTT}^{pj} = \psi_g N_{cT}^{pj} \tag{10.3.3-9}$$

式中 $\psi_g = 1.28 - 0.64\dfrac{g}{d} \leqslant 1.1$，$g$ 为两支管的横向间距。

2） 受拉支管在管节点处的承载力设计值 N_{tTT}^{pj} 应按下式计算：

$$N_{tTT}^{pj} = N_{tT}^{pj} \tag{10.3.3-10}$$

5 KK 形节点（图 10.3.3f）：

受压或受拉支管在管节点处的承载力设计值 N_{cKK}^{pj} 或 N_{tKK}^{pj} 应等于 K 形节点相应支管承载力设计值 N_{cK}^{pj} 或 N_{tK}^{pj} 的 0.9 倍。

10.3.4 矩形管直接焊接节点（图 10.3.4）的承载力应按下列规定计算，其适用范围如表 10.3.4 所示。

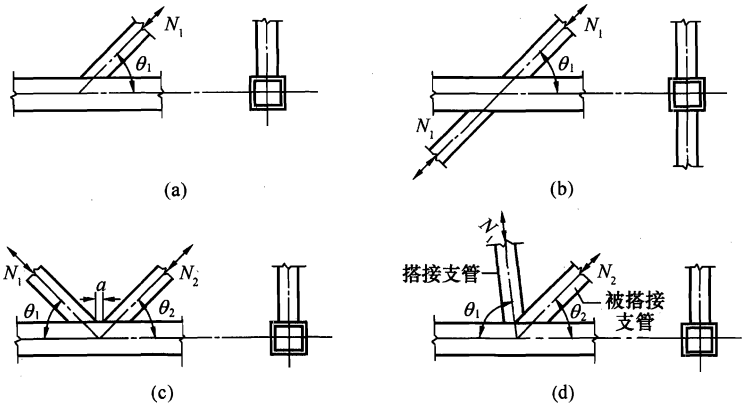

图 10.3.4 矩形管直接焊接平面管节点

(a) T、Y 形节点；(b) X 形节点；

(c) 有间隙的 K、N 形节点；(d) 搭接的 K、N 形节点

表 10.3.4　矩形管节点几何参数的适用范围

管截面形式		节点形式	节点几何参数，$i=1$ 或 2，表示支管；j—表示被搭接的支管				
			$\frac{b_i}{b}$，$\frac{h_i}{b}$（或$\frac{d_i}{b}$）	$\frac{b_i}{t_i}$、$\frac{h_i}{t_i}$（或$\frac{d_i}{t_i}$）		$\frac{h_i}{b_i}$	$\frac{b}{t}$、$\frac{h}{t}$	a 或 O_v、$\frac{b_i}{b_j}$、$\frac{t_i}{t_j}$
				受压	受拉			
主管为矩形管	支管为矩形管	T、Y、X形	$\geqslant 0.25$	$\leqslant 37\sqrt{\frac{235}{f_{yi}}}$ $\leqslant 35$	$\leqslant 35$	$0.5\leqslant \frac{h_i}{b_i} \leqslant 2$	$\leqslant 35$	$0.5(1-\beta)\leqslant \frac{a}{b}\leqslant 1.5(1-\beta)^*$ $a\geqslant t_1+t_2$
		有间隙的K形和N形	$\geqslant 0.1+\frac{0.01b}{t}$ $\beta\geqslant 0.35$					
		搭接K形和N形	$\geqslant 0.25$	$\leqslant 33\sqrt{\frac{235}{f_{yi}}}$			$\leqslant 40$	$25\% \leqslant O_v \leqslant 100\%$ $\frac{t_i}{t_j}\leqslant 1.0$， $1.0\geqslant \frac{b_i}{b_j}\geqslant 0.75$
		支管为圆管	$0.4\leqslant \frac{d_i}{b} \leqslant 0.8$	$\leqslant 44\sqrt{\frac{235}{f_{yi}}}$	$\leqslant 50$	用 d_i 取代 b_i 之后，仍应满足上述相应条件		

注：1　标注 * 处当 $a/b > 1.5(1-\beta)$，则按 T 形或 Y 形节点计算。

2　b_i、h_i、t_i 分别为第 i 个矩形支管的截面宽度、高度和壁厚；

d_i、t_i 分别为第 i 个圆支管的外径和壁厚；

b、h、t 分别为矩形主管的截面宽度、高度和壁厚；

a 为支管间的间隙，见图 10.3.4；

O_v 为搭接率，见第 10.2.3 条；

β 为参数；对 T、Y、X 形节点，$\beta=\frac{b_i}{b}$ 或 $\frac{d_i}{b}$；对 K、N 形节点，$\beta=\frac{b_1+b_2+h_1+h_2}{4b}$ 或 $\beta=\frac{d_1+d_2}{2b}$；

f_{yi} 为第 i 个支管钢材的屈服强度。

为保证节点处矩形主管的强度，支管的轴心力 N_i 和主管的轴心力 N 不得大于下列规定的节点承载力设计值：

1　支管为矩形管的 T、Y 和 X 形节点（图 10.3.4a、b）：

1）当 $\beta\leqslant 0.85$ 时，支管在节点处的承载力设计值 N_i^{pj} 应按下式计算：

$$N_i^{pj}=1.8\left(\frac{h_i}{bc\sin\theta_i}+2\right)\frac{t^2 f}{c\sin\theta_i}\psi_n \qquad (10.3.4\text{-}1)$$

$$c=(1-\beta)^{0.5}$$

式中　ψ_n——参数；当主管受压时，$\psi_n=1.0-\frac{0.25}{\beta}\cdot\frac{\sigma}{f}$；当主管受拉时，$\psi_n=1.0$；

σ——节点两侧主管轴心压应力的较大绝对值。

2）当 $\beta=1.0$ 时，支管在节点处的承载力设计值 N_i^{pj} 应按下式计算：

$$N_i^{pj}=2.0\left(\frac{h_i}{\sin\theta_i}+5t\right)\frac{tf_k}{\sin\theta_i}\psi_n \qquad (10.3.4\text{-}2)$$

当为X形节点，$\theta_i<90°$且$h \geqslant h_i/\cos\theta_i$时，尚应按下式验算：

$$N_i^{pj} = \frac{2htf_v}{\sin\theta_i} \tag{10.3.4-3}$$

式中 f_k——主管强度设计值；当支管受拉时，$f_k=f$；当支管受压时，对T、Y形节点，$f_k=0.8\varphi f$；对X形节点，$f_k=(0.65\sin\theta_i)\varphi f$；$\varphi$为按长细比$\lambda=1.73\left(\frac{h}{t}-2\right)\left(\frac{1}{\sin\theta_i}\right)^{0.5}$确定的轴心受压构件的稳定系数；

f_v——主管钢材的抗剪强度设计值。

3) 当$0.85<\beta<1.0$时，支管在节点处承载力的设计值应按公式（10.3.4-1）与（10.3.4-2）或公式（10.3.4-3）所得的值，根据β进行线性插值。此外，还不应超过下列二式的计算值：

$$N_i^{pj} = 2.0(h_i - 2t_i + b_e)t_i f_i \tag{10.3.4-4}$$

$$b_e = \frac{10}{b/t}\cdot\frac{f_y t}{f_{yi}t_i}\cdot b_i \leqslant b_i$$

当$0.85\leqslant\beta\leqslant 1-\frac{2t}{b}$时：

$$N_i^{pj} = 2.0\left(\frac{h_i}{\sin\theta_i} + b_{ep}\right)\frac{tf_v}{\sin\theta_i} \tag{10.3.4-5}$$

$$b_{ep} = \frac{10}{b/t}\cdot b_i \leqslant b_i$$

式中 h_i、t_i、f_i——分别为支管的截面高度、壁厚以及抗拉（抗压和抗弯）强度设计值。

2 支管为矩形管的有间隙的K形和N形节点（图10.3.4c）：

1) 节点处任一支管的承载力设计值应取下列各式的较小值：

$$N_i^{pj} = 1.42\frac{b_1 + b_2 + h_1 + h_2}{b\sin\theta_i}\left(\frac{b}{t}\right)^{0.5}t^2 f\psi_n \tag{10.3.4-6}$$

$$N_i^{pj} = \frac{A_v f_v}{\sin\theta_i} \tag{10.3.4-7}$$

$$N_i^{pj} = 2.0\left(h_i - 2t_i + \frac{b_i + b_e}{2}\right)t_i f_i \tag{10.3.4-8}$$

当$\beta\leqslant 1-\frac{2t}{b}$时，尚应小于：

$$N_i^{pj} = 2.0\left(\frac{h_i}{\sin\theta_i} + \frac{b_i + b_{ep}}{2}\right)\frac{tf_v}{\sin\theta_i} \tag{10.3.4-9}$$

式中 A_v——弦杆的受剪面积，按下列公式计算：

$$A_v = (2h + \alpha b)t \tag{10.3.4-10}$$

$$\alpha = \sqrt{\frac{3t^2}{3t^2 + 4a^2}} \tag{10.3.4-11}$$

2) 节点间隙处的弦杆轴心受力承载力设计值为：

$$N^{pj} = (A - \alpha_v A_v)f \tag{10.3.4-12}$$

式中 α_v——考虑剪力对弦杆轴心承载力的影响系数，按下式计算：

$$\alpha_v = 1 - \sqrt{1 - \left(\frac{V}{V_p}\right)^2} \tag{10.3.4-13}$$

$$V_p = A_v f_v$$

V——节点间隙处弦杆所受的剪力，可按任一支管的竖向分力计算。

3 支管为矩形管的搭接的K形和N形节点（图10.3.4d）：

搭接支管的承载力设计值应根据不同的搭接率 O_v 按下列公式计算（下标 j 表示被搭接的支管）：

1） 当25%≤O_v<50%时：

$$N_i^{pj} = 2.0\left[(h_i - 2t_i)\frac{O_v}{0.5} + \frac{b_e + b_{ej}}{2}\right]t_i f_i \tag{10.3.4-14}$$

$$b_{ej} = \frac{10}{b_j/t_j} \cdot \frac{t_j f_{yj}}{t_i f_{yj}} \cdot b_i \leqslant b_i$$

2） 当50%≤O_v<80%时：

$$N_i^{pj} = 2.0\left(h_i - 2t_i + \frac{b_e + b_{ej}}{2}\right)t_i f_i \tag{10.3.4-15}$$

3） 当80%≤O_v≤100%时：

$$N_i^{pj} = 2.0\left(h_i - 2t_i + \frac{b_i + b_{ej}}{2}\right)t_i f_i \tag{10.3.4-16}$$

被搭接支管的承载力应满足下式要求：

$$\frac{N_j^{pj}}{A_j f_{yj}} \leqslant \frac{N_i^{pj}}{A_i f_{yi}} \tag{10.3.4-17}$$

4 支管为圆管的各种形式的节点：

当支管为圆管时，上述各节点承载力的计算公式仍可使用，但需用 d_i 取代 b_i 和 h_i，并将各式右侧乘以系数 $\pi/4$，同时应将式（10.3.4-10）中的 α 值取为零。

11 钢与混凝土组合梁

11.1 一 般 规 定

11.1.1 本章规定一般用于不直接承受动力荷载由混凝土翼板与钢梁通过抗剪连接件组成的组合梁。

组合梁的翼板可用现浇混凝土板，亦可用混凝土叠合板或压型钢板混凝土组合板，其中混凝土板应按现行国家标准《混凝土结构设计规范》GB 50010 的规定进行设计。

11.1.2 混凝土翼板的有效宽度 b_e（图 11.1.2）应按下式计算：

$$b_e = b_0 + b_1 + b_2 \tag{11.1.2}$$

式中 b_0——板托顶部的宽度；当板托倾角 $\alpha<45°$时，应按 $\alpha=45°$计算板托顶部的宽度；当无板托时，则取钢梁上翼缘的宽度；

b_1、b_2——梁外侧和内侧的翼板计算宽度，各取梁跨度 l 的 1/6 和翼板厚度 h_{c1}的 6 倍中的较小值。此外，b_1 尚不应超过翼板实际外伸宽度 s_1；b_2 不应超过相邻钢梁上翼缘或板托间净距 s_0 的 1/2。当为中间梁时，公式（11.1.2）中的 b_1 等于 b_2。

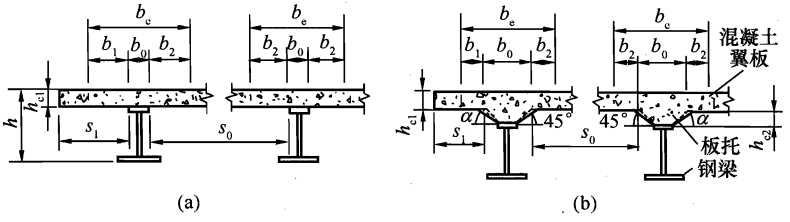

图 11.1.2 混凝土翼板的计算宽度

图 11.1.2 中，h_{c1}为混凝土翼板的厚度，当采用压型钢板混凝土组合板时，翼板厚度 h_{c1}等于组合板的总厚度减去压型钢板的肋高，但在计算混凝土翼板的有效宽度时，压型钢板混凝土组合板的翼板厚度 h_{c1}可取有肋处板的总厚度；h_{c2}为板托高度，当无板托时，$h_{c2}=0$。

11.1.3 组合梁（含部分抗剪连接组合梁和钢梁与组合板构成的组合梁）的挠度应按弹性方法进行计算，并应按本规范第 11.4.2 条的规定考虑混凝土翼板和钢梁之间的滑移效应对组合梁的抗弯刚度进行折减。

对于连续组合梁，在距中间支座两侧各 0.15l（l 为梁的跨度）范围内，不计受拉区混凝土对刚度的影响，但应计入翼板有效宽度 b_e 范围内配置的纵向钢筋的作用，其余区段仍取折减刚度，除按此验算其挠度外，尚应按现行国家标准《混凝土结构设计规范》GB 50010 的规定验算负弯矩区段混凝土最大裂缝宽度 w_{max}。

在组合梁的强度、挠度和裂缝计算中，可不考虑板托截面。

组合梁尚应按有关规定进行混凝土翼板的纵向抗剪验算。

11.1.4 组合梁施工时，若钢梁下无临时支承，则混凝土硬结前的材料重量和施工荷载应由钢梁承受，钢梁应按本规范第3章和第4章规定计算其强度、稳定性和变形。施工完成后的使用阶段，组合梁承受的续加荷载产生的变形应与施工阶段钢梁的变形相叠加。

11.1.5 在强度和变形满足的条件下，组合梁交界面上抗剪连接件的纵向水平抗剪能力不能保证最大正弯矩截面上抗弯承载力充分发挥时，可以按照部分抗剪连接进行设计。用压型钢板做混凝土底模的组合梁，亦宜按照部分抗剪连接组合梁设计。部分抗剪连接限用于跨度不超过20m的等截面组合梁。

11.1.6 按本章规定考虑全截面塑性发展进行组合梁的强度计算时，钢梁钢材的强度设计值 f 应按本规范第3.4.1和3.4.2条的规定采用，当组成板件的厚度不同时，可统一取用较厚板件的强度设计值。组合梁负弯矩区段所配负弯矩钢筋的强度设计值按现行国家标准《混凝土结构设计规范》GB 50010的有关规定采用。连续组合梁采用弹性分析计算内力时，考虑塑性发展的内力调幅系数不宜超过15%。

组合梁中钢梁的受压区，其板件的宽厚比应满足本规范第9章第9.1.4条的要求。

11.2 组合梁设计

11.2.1 完全抗剪连接组合梁的抗弯强度应按下列规定计算：

1 正弯矩作用区段：

1） 塑性中和轴在混凝土翼板内（图11.2.1-1）即 $Af \leqslant b_e h_{c1} f_c$ 时：

$$M \leqslant b_e x f_c y \tag{11.2.1-1}$$

$$x = Af/(b_e f_c) \tag{11.2.1-2}$$

式中 M——正弯矩设计值；

A——钢梁的截面面积；

x——混凝土翼板受压区高度；

y——钢梁截面应力的合力至混凝土受压区截面应力的合力间的距离；

f_c——混凝土抗压强度设计值。

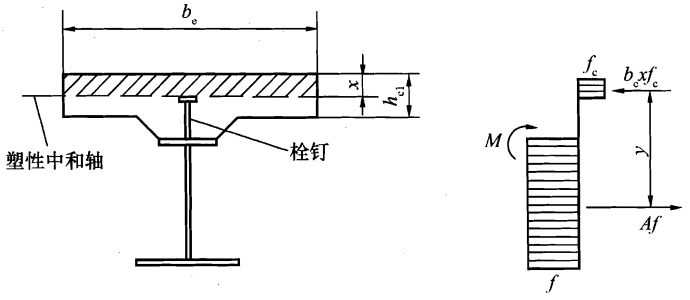

图11.2.1-1 塑性中和轴在混凝土翼板内时的组合梁截面及应力图形

2） 塑性中和轴在钢梁截面内（图11.2.1-2），即 $Af > b_e h_{c1} f_c$ 时：

$$M \leqslant b_e h_{c1} f_c y_1 + A_c f y_2 \tag{11.2.1-3}$$

$$A_c = 0.5(A - b_e h_{c1} f_c / f) \tag{11.2.1-4}$$

式中 A_c——钢梁受压区截面面积；

y_1——钢梁受拉区截面形心至混凝土翼板受压区截面形心的距离；

y_2——钢梁受拉区截面形心至钢梁受压区截面形心的距离。

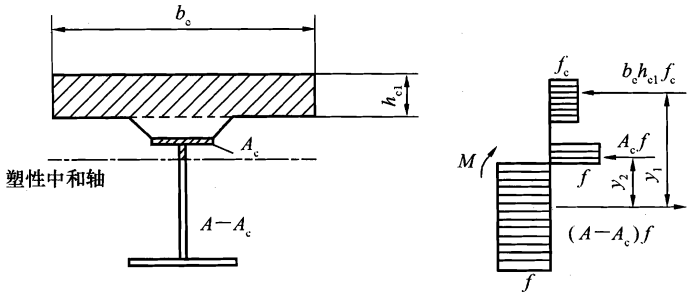

图 11.2.1-2 塑性中和轴在钢梁内时的组合梁截面及应力图形

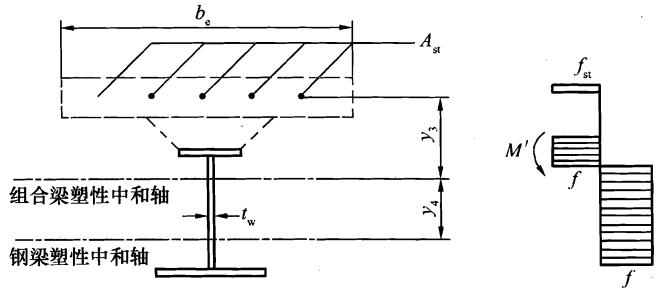

图 11.2.1-3 负弯矩作用时组合梁截面及应力图形

2 负弯矩作用区段（图 11.2.1-3）：

$$M' \leqslant M_s + A_{st} f_{st} (y_3 + y_4/2) \tag{11.2.1-5}$$

$$M_s = (S_1 + S_2) f \tag{11.2.1-6}$$

式中 M'——负弯矩设计值；

S_1、S_2——钢梁塑性中和轴（平分钢梁截面积的轴线）以上和以下截面对该轴的面积矩；

A_{st}——负弯矩区混凝土翼板有效宽度范围内的纵向钢筋截面面积；

f_{st}——钢筋抗拉强度设计值；

y_3——纵向钢筋截面形心至组合梁塑性中和轴的距离；

y_4——组合梁塑性中和轴至钢梁塑性中和轴的距离。当组合梁塑性中和轴在钢梁腹板内时，取 $y_4 = A_{st} f_{st}/(2 t_w f)$；当该中和轴在钢梁翼缘内时，可取 y_4 等于钢梁塑性中和轴至腹板上边缘的距离。

11.2.2 部分抗剪连接组合梁在正弯矩区段的抗弯强度按下列公式计算（图 11.2.2）：

$$x = n_r N_v^c / (b_e f_c) \tag{11.2.2-1}$$

$$A_c = (Af - n_r N_v^c)/(2f) \tag{11.2.2-2}$$

$$M_{u,r} = n_r N_v^c y_1 + 0.5(Af - n_r N_v^c) y_2 \tag{11.2.2-3}$$

式中 $M_{u,r}$——部分抗剪连接时组合梁截面抗弯承载力；

n_r——部分抗剪连接时一个剪跨区的抗剪连接件数目；

N_v^c——每个抗剪连接件的纵向抗剪承载力，按本规范第 11.3 节的有关公式计算。

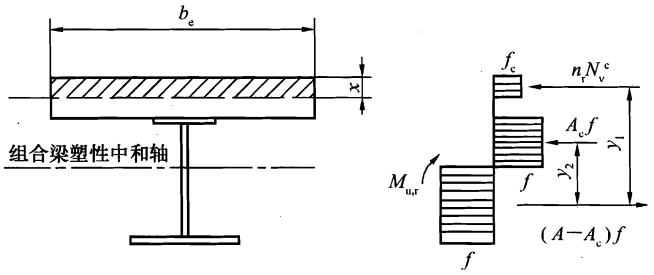

图 11.2.2 部分抗剪连接组合梁计算简图

部分抗剪连接组合梁在负弯矩作用区段的抗弯强度则按 $n_r N_v^c$ 和 $A_{st} f_{st}$ 两者中的较小值计算。

11.2.3 组合梁截面上的全部剪力，假定仅由钢梁腹板承受，应按本规范公式（9.2.2）进行计算。

11.2.4 用塑性设计法计算组合梁强度时，在下列部位可不考虑弯矩与剪力的相互影响：

1 受正弯矩的组合梁截面；

2 $A_{st} f_{st} \geqslant 0.15Af$ 的受负弯矩的组合梁截面。

11.3 抗剪连接件的计算

11.3.1 组合梁的抗剪连接件宜采用栓钉，也可采用槽钢、弯筋或有可靠依据的其他类型连接件。栓钉、槽钢及弯筋连接件的设置方式如图 11.3.1 所示；一个抗剪连接件的承

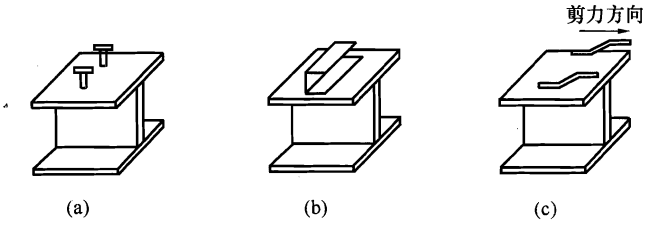

图 11.3.1 连接件的外形及设置方向

（a）栓钉连接件；（b）槽钢连接件；（c）弯筋连接件

载力设计值由下列公式确定：

1 圆柱头焊钉（栓钉）连接件：

$$N_v^c = 0.43A_s\sqrt{E_c f_c} \leqslant 0.7A_s \gamma f \qquad (11.3.1\text{-}1)$$

式中 E_c——混凝土的弹性模量；

A_s——圆柱头焊钉（栓钉）钉杆截面面积；

f——圆柱头焊钉（栓钉）抗拉强度设计值；

γ——栓钉材料抗拉强度最小值与屈服强度之比。

当栓钉材料性能等级为4.6级时，取 $f=215$（N/mm^2），$\gamma=1.67$。

2 槽钢连接件：

$$N_v^c = 0.26(t + 0.5t_w)l_c\sqrt{E_c f_c} \tag{11.3.1-2}$$

式中 t——槽钢翼缘的平均厚度；

t_w——槽钢腹板的厚度；

l_c——槽钢的长度。

槽钢连接件通过肢尖肢背两条通长角焊缝与钢梁连接，角焊缝按承受该连接件的抗剪承载力设计值 N_v^c 进行计算。

3 弯筋连接件：

$$N_v^c = A_{st}f_{st} \tag{11.3.1-3}$$

式中 A_{st}——弯筋的截面面积；

f_{st}——弯筋的抗拉强度设计值。

11.3.2 对于用压型钢板混凝土组合板做翼板的组合梁（图11.3.2），其栓钉连接件的抗

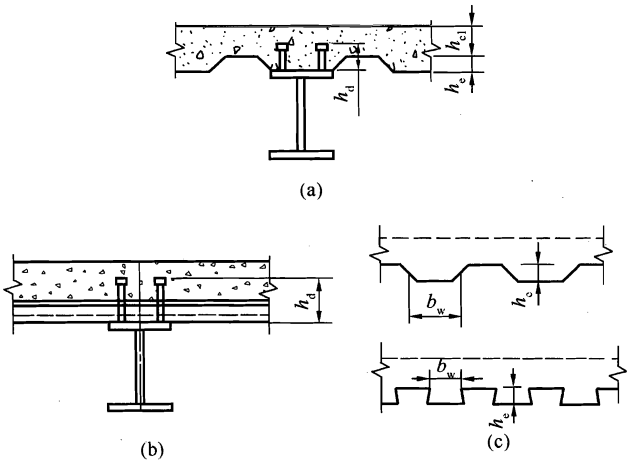

图 11.3.2 用压型钢板混凝土组合板做翼板的组合梁

（a）肋与钢梁平行的组合梁截面；（b）肋与钢梁垂直的组合梁截面；（c）压型钢板组合板剖面

剪承载力设计值应分别按以下两种情况予以降低：

1 当压型钢板肋平行于钢梁布置（图11.3.2a），$b_w/h_e<1.5$ 时，按公式（11.3.1-1）算得的 N_v^c 应乘以折减系数 β_v 后取用。β_v 值按下式计算：

$$\beta_v = 0.6\frac{b_w}{h_e}\left(\frac{h_d - h_e}{h_e}\right) \leqslant 1 \tag{11.3.2-1}$$

式中 b_w——混凝土凸肋的平均宽度，当肋的上部宽度小于下部宽度时（图11.3.2c），改取上部宽度；

h_e——混凝土凸肋高度；

h_d——栓钉高度。

2 当压型钢板肋垂直于钢梁布置时（图11.3.2b），栓钉抗剪连接件承载力设计值的

折减系数按下式计算：

$$\beta_v = \frac{0.85}{\sqrt{n_0}} \cdot \frac{b_w}{h_e}\left(\frac{h_d - h_e}{h_e}\right) \leqslant 1 \qquad (11.3.2\text{-}2)$$

式中 n_0——在梁某截面处一个肋中布置的栓钉数，当多于 3 个时，按 3 个计算。

11.3.3 位于负弯矩区段的抗剪连接件，其抗剪承载力设计值 N_v^c 应乘以折减系数 0.9（中间支座两侧）和 0.8（悬臂部分）。

11.3.4 抗剪连接件的计算（应以弯矩绝对值最大点及零弯矩点为界限，划分为若干个剪跨区（图 11.3.4）逐段进行。每个剪跨区段内钢梁与混凝土翼板交界面的纵向剪力 V_s 按下列方法确定：

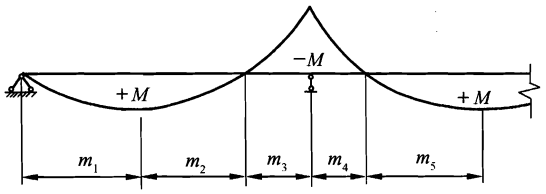

图 11.3.4 连续梁剪跨区划分图

1 位于正弯矩区段的剪跨，V_s 取 Af 和 $b_e h_{c1} f_c$ 中的较小者。

2 位于负弯矩区段的剪跨。

$$V_s = A_{st} f_{st} \qquad (11.3.4\text{-}1)$$

按照完全抗剪连接设计时，每个剪跨区段内需要的连接件总数 n_f，按下式计算：

$$n_f = V_s / N_v^c \qquad (11.3.4\text{-}2)$$

部分抗剪连接组合梁，其连接件的实配个数不得少于 n_f 的 50%。

按公式（11.3.4-2）算得的连接件数量，可在对应的剪跨区段内均匀布置。当在此剪跨区段内有较大集中荷载作用时，应将连接件个数 n_f 按剪力图面积比例分配后再各自均匀布置。

注：当采用栓钉和槽钢抗剪件时，在图 11.3.4 中可将剪跨区 m_2 和 m_3、m_4 和 m_5 分别合并为一个区配置抗剪连接件，合并为一个区段后的 $V_s = b_e h_{c1} f_c + A_{st} f_{st}$。建议在合并区内采用完全抗剪连接。

11.4 挠 度 计 算

11.4.1 组合梁的挠度应分别按荷载的标准组合和准永久组合进行计算，以其中的较大值作为依据。挠度计算可按结构力学公式进行，仅受正弯矩作用的组合梁，其抗弯刚度应取考虑滑移效应的折减刚度，连续组合梁应按变截面刚度深（见第 11.1.3 条）进行计算。在上述两种荷载组合中，组合梁应各取其相应的折减刚度。

11.4.2 组合梁考虑滑移效应的折减刚度 B 可按下式确定：

$$B = \frac{EI_{eq}}{1 + \zeta} \qquad (11.4.2)$$

式中 E——钢梁的弹性模量；

I_{eq}——组合梁的换算截面惯性矩；对荷载的标准组合，可将截面中的混凝土翼板有效宽度除以钢材与混凝土弹性模量的比值 α_E 换算为钢截面宽度后，计算整

个截面的惯性矩；对荷载的准永久组合，则除以 $2\alpha_E$ 进行换算；对于钢梁与压型钢板混凝土组合板构成的组合梁，取其较弱截面的换算截面进行计算，且不计压型钢板的作用；

ζ——刚度折减系数，按 11.4.3 条进行计算。

11.4.3 刚度折减系数 ζ 按下式计算（当 $\zeta \leqslant 0$ 时，取 $\zeta=0$）：

$$\zeta = \eta\left[0.4 - \frac{3}{(jl)^2}\right] \tag{11.4.3-1}$$

$$\eta = \frac{36Ed_c pA_0}{n_s khl^2} \tag{11.4.3-2}$$

$$j = 0.81\sqrt{\frac{n_s kA_1}{EI_0 p}} \qquad (\text{mm}^{-1}) \tag{11.4.3-3}$$

$$A_0 = \frac{A_{cf}A}{\alpha_E A + A_{cf}} \tag{11.4.3-4}$$

$$A_1 = \frac{I_0 + A_0 d_c^2}{A_0} \tag{11.4.3-5}$$

$$I_0 = I + \frac{I_{cf}}{\alpha_E} \tag{11.4.3-6}$$

式中 A_{cf}——混凝土翼板截面面积；对压型钢板混凝土组合板的翼板，取其较弱截面的面积，且不考虑压型钢板；

A——钢梁截面面积；

I——钢梁截面惯性矩；

I_{cf}——混凝土翼板的截面惯性矩；对压型钢板混凝土组合板的翼板，取其较弱截面的惯性矩，且不考虑压型钢板；

d_c——钢梁截面形心到混凝土翼板截面（对压型钢板混凝土组合板为其较弱截面）形心的距离；

h——组合梁截面高度；

l——组合梁的跨度（mm）；

k——抗剪连接件刚度系数，$k = N_v^c$（N/mm）；

p——抗剪连接件的纵向平均间距（mm）；

n_s——抗剪连接件在一根梁上的列数；

α_E——钢材与混凝土弹性模量的比值。

注：当按荷载效应的准永久组合进行计算时，公式（11.4.3-4）和（11.4.3-6）中的 α_E 应乘以 2。

11.5 构 造 要 求

11.5.1 组合梁截面高度不宜超过钢梁截面高度的 2.5 倍；混凝土板托高度 h_{c2} 不宜超过翼板厚度 h_{c1} 的 1.5 倍；板托的顶面宽度不宜小于钢梁上翼缘宽度与 $1.5h_{c2}$ 之和。

11.5.2 组合梁边梁混凝土翼板的构造应满足图 11.5.2 的要求。有板托时，伸出长度不宜小于 h_{c2}；无板托时，应同时满足伸出钢梁中心线不小于 150mm、伸出钢梁翼缘边不小于 50mm 的要求。

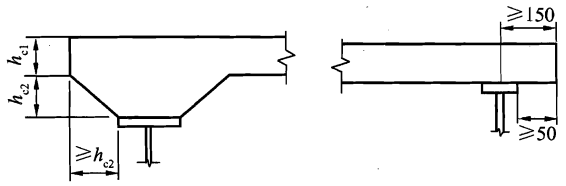

图 11.5.2　边梁构造图

11.5.3　连续组合梁在中间支座负弯矩区的上部纵向钢筋及分布钢筋，应按现行国家标准《混凝土结构设计规范》GB 50010 的规定设置。

11.5.4　抗剪连接件的设置应符合以下规定：

1　栓钉连接件钉头下表面或槽钢连接件上翼缘下表面高出翼板底部钢筋顶面不宜小于 30mm；

2　连接件沿梁跨度方向的最大间距不应大于混凝土翼板（包括板托）厚度的 4 倍，且不大于 40mm；

3　连接件的外侧边缘与钢梁翼缘边缘之间的距离不应小于 20mm；

4　连接件的外侧边缘至混凝土翼板边缘间的距离不应小于 100mm；

5　连接件顶面的混凝土保护层厚度不应小于 15mm。

11.5.5　栓钉连接件除应满足本规范第 11.5.4 条要求外，尚应符合下列规定：

1　当栓钉位置不正对钢梁腹板时，如钢梁上翼缘承受拉力，则栓钉杆直径不应大于钢梁上翼缘厚度的 1.5 倍；如钢梁上翼缘不承受拉力，则栓钉杆直径不应大于钢梁上翼缘厚度的 2.5 倍。

2　栓钉长度不应小于其杆径的 4 倍。

3　栓钉沿梁轴线方向的间距不应小于杆径的 6 倍；垂直于梁轴线方向的间距不应小于杆径的 4 倍。

4　用压型钢板做底模的组合梁，栓钉杆直径不宜大于 19mm，混凝土凸肋宽度不应小于栓钉杆直径的 2.5 倍；栓钉高度 h_d 应符合 $(h_e + 30) \leqslant h_d \leqslant (h_e + 75)$ 的要求（图 11.3.2）。

11.5.6　弯筋连接件除应符合本章第 11.5.4 条要求外，尚应满足以下规定：弯筋连接件宜采用直径不小于 12mm 的钢筋成对布置，用两条长度不小于 4 倍（Ⅰ级钢筋）或 5 倍（Ⅱ级钢筋）钢筋直径的侧焊缝焊接于钢梁翼缘上，其弯起角度一般为 45°，弯折方向应与混凝土翼板对钢梁的水平剪力方向相同。在梁跨中纵向水平剪力方向变化的区段，必须在两个方向均设置弯起钢筋。从弯起点算起的钢筋长度不宜小于其直径的 25 倍（Ⅰ级钢筋另加弯钩），其中水平段长度不宜小于其直径的 10 倍。弯筋连接件沿梁长度方向的间距不宜小于混凝土翼板（包括板托）厚度的 0.7 倍。

11.5.7　槽钢连接件一般采用 *Q*253 钢，截面不宜大于［12.6。

11.5.8　钢梁顶面不得涂刷油漆，在浇灌（或安装）混凝土翼板以前应清除铁锈、焊渣、冰层、积雪、泥土和其他杂物。

附录A　结构或构件的变形容许值

A.1　受弯构件的挠度容许值

A.1.1　吊车梁、楼盖梁、屋盖梁、工作平台梁以及墙架构件的挠度不宜超过表A.1.1所列的容许值。

表A.1.1　受弯构件挠度容许值

项　次	构　件　类　别	挠度容许值	
		$[v_T]$	$[v_Q]$
1	吊车梁和吊车桁架（按自重和起重量最大的一台吊车计算挠度） （1）手动吊车和单梁吊车（含悬挂吊车） （2）轻级工作制桥式吊车 （3）中级工作制桥式吊车 （4）重级工作制桥式吊车	 $l/500$ $l/800$ $l/1000$ $l/1200$	 —
2	手动或电动葫芦的轨道梁	$l/400$	—
3	有重轨（重量等于或大于35kg/m）轨道的工作平台梁 有轻轨（重量等于或小于24kg/m）轨道的工作平台梁	$l/600$ $l/400$	—
4	楼（屋）盖梁或桁架、工作平台梁（第3项除外）和平台板 （1）主梁或桁架（包括设有悬挂起重设备的梁和桁架） （2）抹灰顶棚的次梁 （3）除（1）、（2）款外的其他梁（包括楼梯梁） （4）屋盖檩条 支承无积灰的瓦楞铁和石棉瓦屋面者 支承压型金属板、有积灰的瓦楞铁和石棉瓦等屋面者 支承其他屋面材料者 （5）平台板	 $l/400$ $l/250$ $l/250$ $l/150$ $l/200$ $l/200$ $l/150$	 $l/500$ $l/350$ $l/300$ — — — —
5	墙架构件（风荷载不考虑阵风系数） （1）支柱 （2）抗风桁架（作为连续支柱的支承时） （3）砌体墙的横梁（水平方向） （4）支承压型金属板、瓦楞铁和石棉瓦墙面的横梁（水平方向） （5）带有玻璃窗的横梁（竖直和水平方向）	 — — — — $l/200$	 $l/400$ $l/1000$ $l/300$ $l/200$ $l/200$

注：1　l为受弯构件的跨度（对悬臂梁和伸臂梁为悬伸长度的2倍）。

2　$[v_T]$为永久和可变荷载标准值产生的挠度（如有起拱应减去拱度）的容许值；$[v_Q]$为可变荷载标准值产生的挠度的容许值。

A.1.2　冶金工厂或类似车间中设有工作级别为A7、A8级吊车的车间，其跨间每侧吊车梁或吊车桁架的制动结构，由一台最大吊车横向水平荷载（按荷载规范取值）所产生的挠度不宜超过制动结构跨度的1/2200。

A.2　框架结构的水平位移容许值

A.2.1　在风荷载标准值作用下，框架柱顶水平位移和层间相对位移不宜超过下列数值：

1 无桥式吊车的单层框架的柱顶位移 $H/150$

2 有桥式吊车的单层框架的柱顶位移 $H/400$

3 多层框架的柱顶位移 $H/500$

4 多层框架的层间相对位移 $h/400$

H 为自基础顶面至柱顶的总高度；h 为层高。

注：1 对室内装修要求较高的民用建筑多层框架结构，层间相对位移宜适当减小。无墙壁的多层框架结构，层间相对位移可适当放宽。

2 对轻型框架结构的柱顶水平位移和层间位移均可适当放宽。

A.2.2 在冶金工厂或类似车间中设有 A7、A8 级吊车的厂房柱和设有中级和重级工作制吊车的露天栈桥柱，在吊车梁或吊车桁架的顶面标高处，由一台最大吊车水平荷载（按荷载规范取值）所产生的计算变形值，不宜超过表 A.2.2 所列的容许值。

表 A.2.2 柱水平位移（计算值）的容许值

项　次	位移的种类	按平面结构图形计算	按空间结构图形计算
1	厂房柱的横向位移	$H_c/1250$	$H_c/2000$
2	露天栈桥柱的横向位移	$H_c/2500$	—
3	厂房和露天栈桥柱的纵向位移	$H_c/4000$	—

注：1 H_c 为基础顶面至吊车梁或吊车桁架顶面的高度。

2 计算厂房或露天栈桥柱的纵向位移时，可假定吊车的纵向水平制动力分配在温度区段内所有柱间支撑或纵向框架上。

3 在设有 A8 级吊车的厂房中，厂房柱的水平位移容许值宜减小 10%。

4 在设有 A6 级吊车的厂房柱的纵向位移宜符合表中的要求。

附录 B　梁的整体稳定系数

B.1　等截面焊接工字形和轧制 H 型钢简支梁

等截面焊接工字形和轧制 H 型钢（图 B.1）简支梁的整体稳定系数 φ_b 应按下式计算：

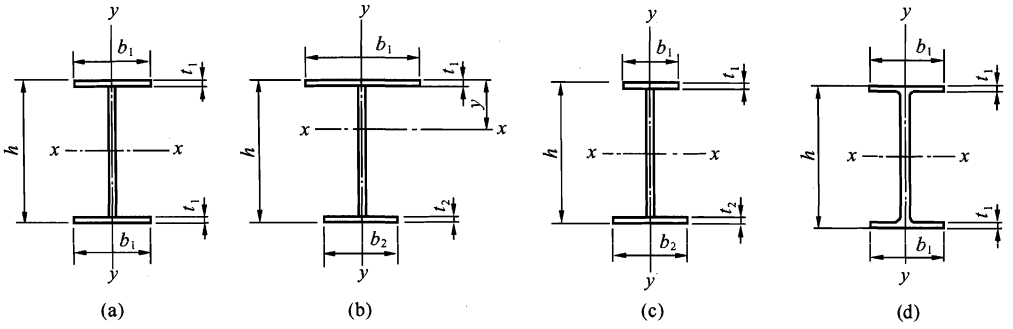

图 B.1　焊接工字形和轧制 H 型钢截面

（a）双轴对称焊接工字形截面；（b）加强受压翼缘的单轴对称焊接工字形截面；

（c）加强受拉翼缘的单轴对称焊接工字形截面；（d）轧制 H 型钢截面

$$\varphi_b = \beta_b \frac{4320}{\lambda_y^2} \cdot \frac{Ah}{W_x}\left[\sqrt{1+\left(\frac{\lambda_y t_1}{4.4h}\right)^2}+\eta_b\right]\frac{235}{f_y} \tag{B.1-1}$$

式中　β_b——梁整体稳定的等效临界弯矩系数，按表 B.1 采用；

λ_y——梁在侧向支承点间对截面弱轴 $y-y$ 的长细比，$\lambda_y = l_1/i_y$，l_1 见本规范第 4.2.1 条，i_y 为梁毛截面对 y 轴的截面回转半径；

A——梁的毛截面面积；

h、t_1——梁截面的全高和受压翼缘厚度；

η_b——截面不对称影响系数；对双轴对称截面（图 B.1a、d）：$\eta_b = 0$；对单轴对称工字形截面（图 B.1b、c）：加强受压翼缘：$\eta_b = 0.8(2\alpha_b - 1)$；加强受拉翼缘：$\eta_b = 2\alpha_b - 1$；$\alpha_b = \dfrac{I_1}{I_1 + I_2}$，式中 I_1 和 I_2 分别为受压翼缘和受拉翼缘对 y 轴的惯性矩。

当按公式（B.1-1）算得的 φ_b 值大于 0.6 时，应用下式计算的 φ'_b 代替 φ_b 值：

$$\varphi'_b = 1.07 - \frac{0.282}{\varphi_b} \leqslant 1.0 \tag{B.1-2}$$

注：公式（B.1-1）亦适用于等截面铆接（或高强度螺栓连接）简支梁，其受压翼缘厚度 t_1 包括翼

缘角钢厚度在内。

表 B.1　H 型钢和等截面工字形简支梁的系数 β_b

项次	侧向支承	荷　　载		$\xi \leqslant 2.0$	$\xi > 2.0$	适用范围
1	跨中无侧向支承	均布荷载作用在	上翼缘	$0.69+0.13\xi$	0.95	图 B.1a、b 和 d 的截面
2			下翼缘	$1.73-0.20\xi$	1.33	
3		集中荷载作用在	上翼缘	$0.73+0.18\xi$	1.09	
4			下翼缘	$2.23-0.28\xi$	1.67	
5	跨度中点有一个侧向支承点	均布荷载作用在	上翼缘	1.15		图 B.1 中的所有截面
6			下翼缘	1.40		
7		集中荷载作用在截面高度上任意位置		1.75		
8	跨中有不少于两个等距离侧向支承点	任意荷载作用在	上翼缘	1.20		
9			下翼缘	1.40		
10	梁端有弯距，但跨中无荷载作用			$1.75-1.05\left(\frac{M_2}{M_1}\right)+0.3\left(\frac{M_2}{M_1}\right)^2$，但 $\leqslant 2.3$		

注：1　ξ 为参数，$\xi=\frac{l_1 t_1}{b_1 h}$，其中 b_1 和 l_1 见本规范第 4.2.1 条。

2　M_1、M_2 为梁的端弯矩，使梁产生同向曲率时 M_1 和 M_2 取同号，产生反向曲率时取异号，$|M_1| \geqslant |M_2|$。

3　表中项次 3、4 和 7 的集中荷载是指一个或少数几个集中荷载位于跨中央附近的情况，对其他情况的集中荷载，应按表中项次 1、2、5、6 内的数值采用。

4　表中项次 8、9 的 β_b，当集中荷载作用在侧向支承点处时，取 $\beta_b=1.20$。

5　荷载作用在上翼缘系指荷载作用点在翼缘表面，方向指向截面形心；荷载作用在下翼缘系指荷载作用点在翼缘表面，方向背向截面形心。

6　对 $\alpha_b>0.8$ 的加强受压翼缘工字形截面，下列情况的 β_b 值应乘以相应的系数：
项次 1：当 $\xi \leqslant 1.0$ 时，乘以 0.95；
项次 3：当 $\xi \leqslant 0.5$ 时，乘以 0.90；当 $0.5 < \xi \leqslant 1.0$ 时，乘以 0.95。

B.2　轧制普通工字钢简支梁

轧制普通工字钢简支梁的整体稳定系数 φ_b 应按表 B.2 采用，当所得的 φ_b 值大于 0.6 时，应按公式（B.1-2）算得相应的 φ'_b 代替 φ_b 值。

表 B.2　轧制普通工字钢简支梁的 φ_b

项次	荷载情况			工字钢型号	自由长度 l_1（m）								
					2	3	4	5	6	7	8	9	10
1	跨中无侧向支承点的梁	集中荷载作用于	上翼缘	10～20	2.00	1.30	0.99	0.80	0.68	0.58	0.53	0.48	0.43
				22～32	2.40	1.48	1.09	0.86	0.72	0.62	0.54	0.49	0.45
				36～63	2.80	1.60	1.07	0.83	0.68	0.56	0.50	0.45	0.40
2			下翼缘	10～20	3.10	1.95	1.34	1.01	0.82	0.69	0.63	0.57	0.52
				22～40	5.50	2.80	1.84	1.37	1.07	0.86	0.73	0.64	0.56
				45～63	7.30	3.60	2.30	1.62	1.20	0.96	0.80	0.69	0.60

续表 B.2

项次	荷载情况			工字钢型号	自由长度 l_1（m）								
					2	3	4	5	6	7	8	9	10
3	跨中无侧向支承点的梁	均布荷载作用于	上翼缘	10～20	1.70	1.12	0.84	0.68	0.57	0.50	0.45	0.41	0.37
				22～40	2.10	1.30	0.93	0.73	0.60	0.51	0.45	0.40	0.36
				45～63	2.60	1.45	0.97	0.73	0.59	0.50	0.44	0.38	0.35
4			上翼缘	10～20	2.50	1.55	1.08	0.83	0.68	0.56	0.52	0.47	0.42
				22～40	4.00	2.20	1.45	1.10	0.85	0.70	0.60	0.52	0.46
				45～63	5.60	2.80	1.80	1.25	0.95	0.78	0.65	0.55	0.49
5	跨中有侧向支承点的梁（不论荷载作用点在截面高度上的位置）			10～20	2.20	1.39	1.01	0.79	0.66	0.57	0.52	0.47	0.42
				22～40	3.00	1.80	1.24	0.96	0.76	0.65	0.56	0.49	0.43
				45～63	4.00	2.20	1.38	1.01	0.80	0.66	0.56	0.49	0.43

注：1　同表 B.1 的注 3、5。

2　表中的 φ_b 适用于 Q235 钢。对其他钢号，表中数值应乘以 $235/f_y$。

B.3　轧制槽钢简支梁

轧制槽钢简支梁的整体稳定系数，不论荷载的形式和荷载作用点在截面高度上的位置，均可按下式计算：

$$\varphi_b = \frac{570bt}{l_1 h} \cdot \frac{235}{f_y} \tag{B.3}$$

式中　h、b、t——分别为槽钢截面的高度、翼缘宽度和平均厚度。

按公式（B.3）算得的 φ_b 大于 0.6 时，应按公式（B.1-2）算得相应的 φ'_b 代替 φ_b 值。

B.4　双轴对称工字形等截面（含 H 型钢）悬臂梁

双轴对称工字形等截面（含 H 型钢）悬臂梁的整体稳定系数，可按公式（B.1-1）计算，但式中系数 β_b 应按表 B.4 查得，$\lambda_y = l_1/i_y$（l_1 为悬臂梁的悬伸长度）。当求得的 φ_b 大于 0.6 时，应按公式（B.1-2）算得相应的 φ'_b 值代替 φ_b 值。

表 B.4　双轴对称工字形等截面（含 H 型钢）悬臂梁的系数 $\boldsymbol{\beta_b}$

项次	荷　载　形　式		$0.60 \leqslant \xi \leqslant 1.24$	$1.24 < \xi \leqslant 1.96$	$1.96 < \xi \leqslant 3.10$
1	一个集中荷载作用在自由端	上翼缘	$0.21+0.67\xi$	$0.72+0.26\xi$	$1.17+0.03\xi$
2		下翼缘	$2.94-0.65\xi$	$2.64-0.40\xi$	$2.15-0.15\xi$
3	均布荷载作用在上翼缘		$0.62+0.82\xi$	$1.25+0.31\xi$	$1.66+0.10\xi$

注：1　本表是按支承端为固定的情况确定的，当用于由邻跨延伸出来的伸臂梁时，应在构造上采取措施加强支承处的抗扭能力。

2　表中 ξ 见表 B.1 注 1。

B.5 受弯构件整体稳定系数的近似计算

均匀弯曲的受弯构件，当 $\lambda_y \leqslant 120\sqrt{235/f_y}$ 时，其整体稳定系数 φ_b 可按下列近似公式计算：

1 工字形截面（含 H 型钢）

双轴对称时：

$$\varphi_b = 1.07 - \frac{\lambda_y^2}{44000} \cdot \frac{f_y}{235} \tag{B.5-1}$$

单轴对称时：

$$\varphi_b = 1.07 - \frac{W_x}{(2\alpha_b + 0.1)Ah} \cdot \frac{\lambda_y^2}{14000} \cdot \frac{f_y}{235} \tag{B.5-2}$$

2 T 形截面（弯矩作用在对称轴平面，绕 x 轴）：

1) 弯矩使翼缘受压时：

双角钢 T 形截面：

$$\varphi_b = 1 - 0.0017\lambda_y\sqrt{f_y/235} \tag{B.5-3}$$

部分 T 型钢和两板组合 T 形截面：

$$\varphi_b = 1 - 0.0022\lambda_y\sqrt{f_y/235} \tag{B.5-4}$$

2) 弯矩使翼缘受拉且腹板宽厚比不大于 $18\sqrt{235/f_y}$ 时：

$$\varphi_b = 1 - 0.0005\lambda_y\sqrt{f_y/235} \tag{B.5-5}$$

按公式（B.5-1）至公式（B.5-5）算得的 φ_b 值大于 0.6 时，不需按公式（B.1-2）换算成 φ_b' 值；当按公式（B.5-1）和公式（B.5-2）算得的 φ_b 值大于 1.0 时，取 $\varphi_b = 1.0$。

附录C　轴心受压构件的稳定系数

表C-1　a类截面轴心受压构件的稳定系数 φ

$\lambda\sqrt{\frac{f_y}{235}}$	0	1	2	3	4	5	6	7	8	9
0	1.000	1.000	1.000	1.000	0.999	0.999	0.998	0.998	0.997	0.996
10	0.995	0.994	0.993	0.992	0.991	0.989	0.988	0.986	0.985	0.983
20	0.981	0.979	0.977	0.976	0.974	0.972	0.970	0.968	0.966	0.964
30	0.963	0.961	0.959	0.957	0.955	0.952	0.950	0.948	0.946	0.944
40	0.941	0.939	0.937	0.934	0.932	0.929	0.927	0.924	0.921	0.919
50	0.916	0.913	0.910	0.907	0.904	0.900	0.897	0.894	0.890	0.886
60	0.883	0.879	0.875	0.871	0.867	0.863	0.858	0.854	0.849	0.844
70	0.839	0.834	0.829	0.824	0.818	0.813	0.807	0.801	0.795	0.789
80	0.783	0.776	0.770	0.763	0.757	0.750	0.743	0.736	0.728	0.721
90	0.714	0.706	0.699	0.691	0.684	0.676	0.668	0.661	0.653	0.645
100	0.638	0.630	0.622	0.615	0.607	0.600	0.592	0.585	0.577	0.570
110	0.563	0.555	0.548	0.541	0.534	0.527	0.520	0.514	0.507	0.500
120	0.494	0.488	0.481	0.475	0.469	0.463	0.457	0.451	0.445	0.440
130	0.434	0.429	0.423	0.418	0.412	0.407	0.402	0.397	0.392	0.387
140	0.383	0.378	0.373	0.369	0.364	0.360	0.356	0.351	0.347	0.343
150	0.339	0.335	0.331	0.327	0.323	0.320	0.316	0.312	0.309	0.305
160	0.302	0.298	0.295	0.292	0.289	0.285	0.282	0.279	0.276	0.273
170	0.270	0.267	0.264	0.262	0.259	0.256	0.253	0.251	0.248	0.246
180	0.243	0.241	0.238	0.236	0.233	0.231	0.229	0.226	0.224	0.222
190	0.220	0.218	0.215	0.213	0.211	0.209	0.207	0.205	0.203	0.201
200	0.199	0.198	0.196	0.194	0.192	0.190	0.189	0.187	0.185	0.183
210	0.182	0.180	0.179	0.177	0.175	0.174	0.172	0.171	0.169	0.168
220	0.166	0.165	0.164	0.162	0.161	0.159	0.158	0.157	0.155	0.154
230	0.153	0.152	0.150	0.149	0.148	0.147	0.146	0.144	0.143	0.142
240	0.141	0.140	0.139	0.138	0.136	0.135	0.134	0.133	0.132	0.131
250	0.130	—	—	—	—	—	—	—	—	—

注：见表C-4注。

表 C-2　b类截面轴心受压构件的稳定系数 φ

$\lambda\sqrt{\frac{f_y}{235}}$	0	1	2	3	4	5	6	7	8	9
0	1.000	1.000	1.000	0.999	0.999	0.998	0.997	0.996	0.995	0.994
10	0.992	0.991	0.989	0.987	0.985	0.983	0.981	0.978	0.976	0.973
20	0.970	0.967	0.963	0.960	0.957	0.953	0.950	0.946	0.943	0.939
30	0.936	0.932	0.929	0.925	0.922	0.918	0.914	0.910	0.906	0.903
40	0.899	0.895	0.891	0.887	0.882	0.878	0.874	0.870	0.865	0.861
50	0.856	0.852	0.847	0.842	0.838	0.833	0.828	0.823	0.818	0.813
60	0.807	0.802	0.797	0.791	0.786	0.780	0.774	0.769	0.763	0.757
70	0.751	0.745	0.739	0.732	0.726	0.720	0.714	0.707	0.701	0.694
80	0.688	0.681	0.675	0.668	0.661	0.655	0.648	0.641	0.635	0.628
90	0.621	0.614	0.608	0.601	0.594	0.588	0.581	0.575	0.568	0.561
100	0.555	0.549	0.542	0.536	0.529	0.523	0.517	0.511	0.605	0.499
110	0.493	0.487	0.481	0.475	0.470	0.464	0.458	0.453	0.447	0.442
120	0.437	0.432	0.426	0.421	0.416	0.411	0.406	0.402	0.397	0.392
130	0.387	0.383	0.378	0.374	0.370	0.365	0.361	0.357	0.353	0.349
140	0.345	0.341	0.337	0.333	0.329	0.326	0.322	0.318	0.315	0.311
150	0.308	0.304	0.301	0.298	0.295	0.291	0.288	0.285	0.282	0.279
160	0.276	0.273	0.270	0.267	0.265	0.262	0.259	0.256	0.254	0.251
170	0.249	0.246	0.244	0.241	0.239	0.236	0.234	0.232	0.229	0.227
180	0.225	0.223	0.220	0.218	0.216	0.214	0.212	0.210	0.208	0.206
190	0.204	0.202	0.200	0.198	0.197	0.195	0.193	0.191	0.190	0.188
200	0.186	0.184	0.183	0.181	0.180	0.178	0.176	0.175	0.173	0.172
210	0.170	0.169	0.167	0.166	0.165	0.163	0.162	0.160	0.159	0.158
220	0.156	0.155	0.154	0.153	0.151	0.150	0.149	0.148	0.146	0.145
230	0.144	0.143	0.142	0.141	0.140	0.138	0.137	0.136	0.135	0.134
240	0.133	0.132	0.131	0.130	0.129	0.128	0.127	0.126	0.125	0.124
250	0.123	—	—	—	—	—	—	—	—	—

注：见表 C-4 注。

表 C-3　c 类截面轴心受压构件的稳定系数 φ

$\lambda\sqrt{\frac{f_y}{235}}$	0	1	2	3	4	5	6	7	8	9
0	1.000	1.000	1.000	0.999	0.999	0.998	0.997	0.996	0.995	0.993
10	0.992	0.990	0.988	0.986	0.983	0.981	0.978	0.976	0.973	0.970
20	0.966	0.959	0.953	0.947	0.940	0.934	0.928	0.921	0.915	0.909
30	0.902	0.896	0.890	0.884	0.877	0.871	0.865	0.858	0.852	0.846
40	0.839	0.833	0.826	0.820	0.814	0.807	0.801	0.794	0.788	0.781
50	0.775	0.768	0.762	0.755	0.748	0.742	0.735	0.729	0.722	0.715
60	0.709	0.702	0.695	0.689	0.682	0.676	0.669	0.662	0.656	0.649
70	0.643	0.636	0.629	0.623	0.616	0.610	0.604	0.597	0.591	0.584
80	0.578	0.572	0.566	0.559	0.553	0.547	0.541	0.535	0.529	0.523
90	0.517	0.511	0.505	0.500	0.494	0.488	0.483	0.477	0.472	0.467
100	0.463	0.458	0.454	0.449	0.445	0.441	0.436	0.432	0.428	0.423
110	0.419	0.415	0.411	0.407	0.403	0.399	0.395	0.391	0.387	0.383
120	0.379	0.375	0.371	0.367	0.364	0.360	0.356	0.353	0.349	0.346
130	0.342	0.339	0.335	0.332	0.328	0.325	0.322	0.319	0.315	0.312
140	0.309	0.306	0.303	0.300	0.297	0.294	0.291	0.288	0.285	0.282
150	0.280	0.277	0.274	0.271	0.269	0.266	0.264	0.261	0.258	0.256
160	0.254	0.251	0.249	0.246	0.244	0.242	0.239	0.237	0.235	0.233
170	0.230	0.228	0.226	0.224	0.222	0.220	0.218	0.216	0.214	0.212
180	0.210	0.208	0.206	0.205	0.203	0.201	0.199	0.197	0.196	0.194
190	0.192	0.190	0.189	0.187	0.186	0.184	0.182	0.181	0.179	0.178
200	0.176	0.175	0.173	0.172	0.170	0.169	0.168	0.166	0.165	0.163
210	0.162	0.161	0.159	0.158	0.157	0.156	0.154	0.153	0.152	0.151
220	0.150	0.148	0.147	0.146	0.145	0.144	0.143	0.142	0.140	0.139
230	0.138	0.137	0.136	0.135	0.134	0.133	0.132	0.131	0.130	0.129
240	0.128	0.127	0.126	0.125	0.124	0.124	0.123	0.122	0.121	0.120
250	0.119	—	—	—	—	—	—	—	—	—

注：见表 C-4 注。

表 C-4　d 类截面轴心受压构件的稳定系数 φ

$\lambda\sqrt{\frac{f_y}{235}}$	0	1	2	3	4	5	6	7	8	9
0	1.000	1.000	0.999	0.999	0.998	0.996	0.994	0.992	0.990	0.987
10	0.984	0.981	0.978	0.974	0.969	0.965	0.960	0.955	0.949	0.944
20	0.937	0.927	0.918	0.909	0.900	0.891	0.883	0.874	0.865	0.857
30	0.848	0.840	0.831	0.823	0.815	0.807	0.799	0.790	0.782	0.774
40	0.766	0.759	0.751	0.743	0.735	0.728	0.720	0.712	0.705	0.697
50	0.690	0.683	0.675	0.668	0.661	0.654	0.646	0.639	0.632	0.625
60	0.618	0.612	0.605	0.598	0.591	0.585	0.578	0.572	0.565	0.559
70	0.552	0.546	0.540	0.534	0.528	0.522	0.516	0.510	0.504	0.498
80	0.493	0.487	0.481	0.476	0.470	0.465	0.460	0.454	0.449	0.444
90	0.439	0.434	0.429	0.424	0.419	0.414	0.410	0.405	0.401	0.397
100	0.394	0.390	0.387	0.383	0.380	0.376	0.373	0.370	0.366	0.363
110	0.359	0.356	0.353	0.350	0.346	0.343	0.340	0.337	0.334	0.331
120	0.328	0.325	0.322	0.319	0.316	0.313	0.310	0.307	0.304	0.301
130	0.299	0.296	0.293	0.290	0.288	0.285	0.282	0.280	0.277	0.275
140	0.272	0.270	0.267	0.265	0.262	0.260	0.258	0.255	0.253	0.251
150	0.248	0.246	0.244	0.242	0.240	0.237	0.235	0.233	0.231	0.229
160	0.227	0.225	0.223	0.221	0.219	0.217	0.215	0.213	0.212	0.210
170	0.208	0.206	0.204	0.203	0.201	0.199	0.197	0.196	0.1914	0.192
180	0.191	0.189	0.188	0.186	0.184	0.183	0.181	0.180	0.178	0.177
190	0.176	0.174	0.173	0.171	0.170	0.168	0.167	0.166	0.164	0.163
200	0.162	—	—	—	—	—	—	—	—	—

注：1. 表 C-1 至表 C-4 中的 φ 值系按下列公式算得：

当 $\lambda_n=\frac{\lambda}{\pi}\sqrt{f_y/E}\leqslant 0.215$ 时：

$$\varphi=1-\alpha_1\lambda_n^2$$

当 $\lambda_n>0.215$ 时：

$$\varphi=\frac{1}{2\lambda_n^2}\left[(\alpha_2+\alpha_3\lambda_n+\lambda_n^2)-\sqrt{(\alpha_2+\alpha_3\lambda_n+\lambda_n^2)^2-4\lambda_n^2}\right]$$

式中，α_1、α_2、α_3 为系数，根据本规范表 5.1.2 的截面分类，按表 C-5 采用。

2. 当构件的 $\lambda\sqrt{f_y/235}$ 值超出表 C-1 至表 C-4 的范围时，则 φ 值按注 1 所列的公式计算。

表 C-5　系数 α_1、α_2、α_3

截面类别		α_1	α_2	α_3
a类		0.41	0.986	0.152
b类		0.65	0.965	0.300
c类	$\lambda_n \leqslant 1.05$	0.73	0.906	0.595
	$\lambda_n > 1.05$		1.216	0.302
d类	$\lambda_n \leqslant 1.05$	1.35	0.868	0.915
	$\lambda_n > 1.05$		1.375	0.432

附录D　柱的计算长度系数

表 D-1　无侧移框架柱的计算长度系数 μ

K_2 \ K_1	0	0.05	0.1	0.2	0.3	0.4	0.5	1	2	3	4	5	≥10
0	1.000	0.990	0.981	0.964	0.949	0.935	0.922	0.875	0.820	0.791	0.773	0.760	0.732
0.05	0.990	0.981	0.971	0.955	0.940	0.926	0.914	0.867	0.814	0.784	0.766	0.754	0.726
0.1	0.981	0.971	0.962	0.946	0.931	0.918	0.906	0.860	0.807	0.778	0.760	0.748	0.721
0.2	0.964	0.955	0.946	0.930	0.916	0.903	0.891	0.846	0.795	0.767	0.749	0.737	0.711
0.3	0.949	0.940	0.931	0.916	0.902	0.889	0.878	0.834	0.784	0.756	0.739	0.728	0.701
0.4	0.935	0.926	0.918	0.903	0.889	0.877	0.866	0.823	0.774	0.747	0.730	0.719	0.693
0.5	0.922	0.914	0.906	0.891	0.878	0.866	0.855	0.813	0.765	0.738	0.721	0.710	0.685
1	0.875	0.867	0.860	0.846	0.834	0.823	0.813	0.774	0.729	0.704	0.688	0.677	0.654
2	0.820	0.814	0.807	0.795	0.784	0.774	0.765	0.729	0.686	0.663	0.648	0.638	0.615
3	0.791	0.784	0.778	0.767	0.756	0.747	0.738	0.704	0.663	0.640	0.625	0.616	0.593
4	0.773	0.766	0.760	0.749	0.739	0.730	0.721	0.688	0.648	0.625	0.611	0.601	0.580
5	0.760	0.754	0.748	0.737	0.728	0.719	0.710	0.677	0.638	0.616	0.601	0.592	0.570
≥10	0.732	0.726	0.721	0.711	0.701	0.693	0.685	0.654	0.615	0.593	0.580	0.570	0.549

注：1　表中的计算长度系数 μ 值系按下式算得：

$$\left[\left(\frac{\pi}{\mu}\right)^2+2(K_1+K_2)-4K_1K_2\right]\frac{\pi}{\mu}\cdot\sin\frac{\pi}{\mu}-2\left[(K_1+K_2)\left(\frac{\pi}{\mu}\right)^2+4K_1K_2\right]\cos\frac{\pi}{\mu}+8K_1K_2=0$$

式中，K_1、K_2 分别为相交于柱上端、柱下端的横梁线刚度之和与柱线刚度之和的比值。当梁远端为铰接时，应将横梁线刚度乘以 1.5；当横梁远端为嵌固时，则将横梁线刚度乘以 2。

2　当横梁与柱铰接时，取横梁线刚度为零。

3　对底层框架柱：当柱与基础铰接时，取 $K_2=0$（对平板支座可取 $K_2=0.1$）；当柱与基础刚接时，取 $K_2=10$。

4　当与柱刚性连接的横梁所受轴心压力 N_b 较大时，横梁线刚度应乘以折减系数 α_N：

横梁远端与柱刚接和横梁远端铰支时：$\alpha_N=1-N_b/N_{Eb}$

横梁远端嵌固时：$\alpha_N=1-N_b/(2N_{Eb})$

式中，$N_{Eb}=\pi^2EI_b/l^2$，I_b 为横梁截面惯性矩，l 为横梁长度。

表 D-2　有侧移框架柱的计算长度系数 μ

K_2 \ K_1	0	0.05	0.1	0.2	0.3	0.4	0.5	1	2	3	4	5	≥10
0	∞	6.02	4.46	3.42	3.01	2.78	2.64	2.33	2.17	2.11	2.08	2.07	2.03
0.05	6.02	4.16	3.47	2.86	2.58	2.42	2.31	2.07	1.94	1.90	1.87	1.86	1.83
0.1	4.46	3.47	3.01	2.56	2.33	2.20	2.11	1.90	1.79	1.75	1.73	1.72	1.70
0.2	3.42	2.86	2.56	2.23	2.05	1.94	1.87	1.70	1.60	1.57	1.55	1.54	1.52
0.3	3.01	2.58	2.33	2.05	1.90	1.80	1.74	1.58	1.49	1.46	1.45	1.44	1.42
0.4	2.78	2.42	2.20	1.94	1.80	1.71	1.65	1.50	1.42	1.39	1.37	1.37	1.35
0.5	2.64	2.31	2.11	1.87	1.74	1.65	1.59	1.45	1.37	1.34	1.32	1.32	1.30
1	2.33	2.07	1.90	1.70	1.58	1.50	1.45	1.32	1.24	1.21	1.20	1.19	1.17
2	2.17	1.94	1.79	1.60	1.49	1.42	1.37	1.24	1.16	1.14	1.12	1.12	1.10
3	2.11	1.90	1.75	1.57	1.46	1.39	1.34	1.21	1.14	1.11	1.10	1.09	1.07
4	2.08	1.87	1.73	1.55	1.45	1.37	1.32	1.20	1.12	1.10	1.08	1.08	1.06
5	2.07	1.86	1.72	1.54	1.44	1.37	1.32	1.19	1.12	1.09	1.08	1.07	1.05
≥10	2.03	1.83	1.70	1.52	1.42	1.35	1.30	1.17	1.10	1.07	1.06	1.05	1.03

注：1　表中的计算长度系数 μ 值系按下式算得：

$$\left[36K_1K_2-\left(\frac{\pi}{\mu}\right)^2\right]\sin\frac{\pi}{\mu}+6(K_1+K_2)\frac{\pi}{\mu}\cdot\cos\frac{\pi}{\mu}=0$$

式中，K_1、K_2 分别为相交于柱上端、柱下端的横梁线刚度之和与柱线刚度之和的比值。当横梁远端为铰接时，应将横梁线刚度乘以 0.5；当横梁远端为嵌固时，则应乘以 2/3。

2　当横梁与柱铰接时，取横梁线刚度为零。

3　对底层框架柱：当柱与基础铰接时，取 $K_2=0$（对平板支座可取 $K_2=0.1$）；当柱与基础刚接时，取 $K_2=10$。

4　当与柱刚性连接的横梁所受轴心压力 N_b 较大时，横梁线刚度应乘以折减系数 α_N：

横梁远端与柱刚接时：$\alpha_N=1-N_b/(4N_{Eb})$

横梁远端铰支时：$\alpha_N=1-N_b/N_{Eb}$

横梁远端嵌固时：$\alpha_N=1-N_b/(2N_{Eb})$

N_{Eb}的计算式见表 D-1 注 4。

表 D-3　柱上端为自由的单阶柱下段的计算长度系数 μ_2

简　图	η_1 \ K_1	0.06	0.08	0.10	0.12	0.14	0.16	0.18	0.20	0.22	0.24	0.26	0.28	0.3	0.4	0.5	0.6	0.7	0.8
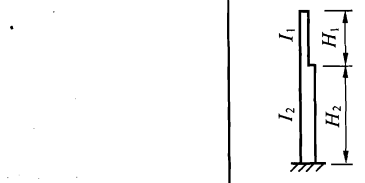	0.2	2.00	2.01	2.01	2.01	2.01	2.01	2.01	2.02	2.02	2.02	2.02	2.02	2.02	2.03	2.04	2.05	2.06	2.07
	0.3	2.01	2.02	2.02	2.02	2.03	2.03	2.03	2.04	2.04	2.05	2.05	2.05	2.06	2.08	2.10	2.12	2.13	2.15
	0.4	2.02	2.03	2.04	2.04	2.05	2.06	2.07	2.07	2.08	2.09	2.09	2.10	2.11	2.14	2.18	2.21	2.25	2.28
	0.5	2.04	2.05	2.06	2.07	2.09	2.10	2.11	2.12	2.13	2.15	2.16	2.17	2.18	2.24	2.29	2.35	2.40	2.45
	0.6	2.06	2.08	2.10	2.12	2.14	2.16	2.18	2.19	2.21	2.23	2.25	2.26	2.28	2.36	2.44	2.52	2.59	2.66
	0.7	2.10	2.13	2.16	2.18	2.21	2.24	2.26	2.29	2.31	2.34	2.36	2.38	2.41	2.52	2.62	2.72	2.81	2.90
	0.8	2.15	2.20	2.24	2.27	2.31	2.34	2.38	2.41	2.44	2.47	2.50	2.53	2.56	2.70	2.82	2.94	3.06	3.16
	0.9	2.24	2.29	2.35	2.39	2.44	2.48	2.52	2.56	2.60	2.63	2.67	2.71	2.74	2.90	3.05	3.19	3.32	3.44
$K_1 = \frac{I_1}{I_2}\frac{H_2}{H_1}$	1.0	2.36	2.43	2.48	2.54	2.59	2.64	2.69	2.73	2.77	2.82	2.86	2.90	2.94	3.12	3.29	3.45	3.59	3.74
	1.2	2.69	2.76	2.83	2.89	2.95	3.01	3.07	3.12	3.17	3.22	3.27	3.32	3.37	3.59	3.80	3.99	4.17	4.34
$\eta_1 = \frac{H_1}{H_2}\sqrt{\frac{N_1}{N_2}\frac{I_2}{I_1}}$	1.4	3.07	3.14	3.22	3.29	3.36	3.42	3.48	3.55	3.61	3.66	3.72	3.78	3.83	4.09	4.33	4.56	4.77	4.97
	1.6	3.47	3.55	3.63	3.71	3.78	3.85	3.92	3.99	4.07	4.12	4.18	4.25	4.31	4.61	4.88	5.14	5.38	5.62
N_1——上段柱的	1.8	3.88	3.97	4.05	4.13	4.21	4.29	4.37	4.44	4.52	4.59	4.66	4.73	4.80	5.13	5.44	5.73	6.00	6.26
轴心力；	2.0	4.29	4.39	4.48	4.57	4.65	4.74	4.82	4.90	4.99	5.07	5.14	5.22	5.30	5.66	6.00	6.32	6.63	6.92
N_2——下段柱的	2.2	4.71	4.81	4.91	5.00	5.10	5.19	5.28	5.37	5.46	5.54	5.63	5.71	5.80	6.19	6.57	6.92	7.26	7.58
轴心力	2.4	5.13	5.24	5.34	5.44	5.54	5.64	5.74	5.84	5.93	6.03	6.12	6.21	6.30	6.73	7.14	7.52	7.89	8.24
	2.6	5.55	5.66	5.77	5.88	5.99	6.10	6.20	6.31	6.41	6.51	6.61	6.71	6.80	7.27	7.71	8.13	8.52	8.90
	2.8	5.97	6.09	6.21	6.33	6.44	6.55	6.67	6.78	6.89	6.99	7.10	7.21	7.31	7.81	8.28	8.73	9.16	9.57
	3.0	6.39	6.52	6.64	6.77	6.89	7.01	7.13	7.25	7.37	7.48	7.59	7.71	7.82	8.35	8.86	9.34	9.80	10.24

注：表中的计算长度系数 μ_2 值系按下式计算得出：

$$\eta_1 K_1 \cdot \mathrm{tg}\frac{\pi}{\mu_2} \cdot \mathrm{tg}\frac{\pi\eta_1}{\mu_2} - 1 = 0$$

表 D-4　柱上端可移动但不转动的单阶柱下段的计算长度系数 μ_2

简　图	η_1 \ K_1	0.06	0.08	0.10	0.12	0.14	0.16	0.18	0.20	0.22	0.24	0.26	0.28	0.3	0.4	0.5	0.6	0.7	0.8
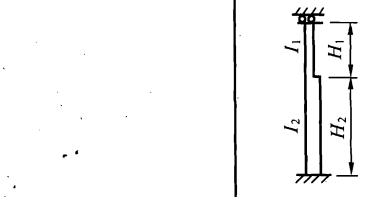	0.2	1.96	1.94	1.93	1.91	1.90	1.89	1.88	1.86	1.85	1.84	1.83	1.82	1.81	1.76	1.72	1.68	1.65	1.62
	0.3	1.96	1.94	1.93	1.92	1.91	1.89	1.88	1.87	1.86	1.85	1.84	1.83	1.82	1.77	1.73	1.70	1.66	1.63
	0.4	1.96	1.95	1.94	1.92	1.91	1.90	1.89	1.88	1.87	1.86	1.85	1.84	1.83	1.79	1.75	1.72	1.68	1.66
	0.5	1.96	1.95	1.94	1.93	1.92	1.91	1.90	1.89	1.88	1.87	1.86	1.85	1.85	1.81	1.77	1.74	1.71	1.69
	0.6	1.97	1.96	1.95	1.94	1.93	1.92	1.91	1.90	1.90	1.89	1.88	1.87	1.87	1.83	1.80	1.78	1.75	1.73
	0.7	1.97	1.97	1.96	1.95	1.94	1.94	1.93	1.92	1.92	1.91	1.90	1.90	1.89	1.86	1.84	1.82	1.80	1.78
	0.8	1.98	1.98	1.97	1.96	1.96	1.95	1.95	1.94	1.94	1.93	1.93	1.93	1.92	1.90	1.88	1.87	1.86	1.84
	0.9	1.99	1.99	1.98	1.98	1.98	1.97	1.97	1.97	1.97	1.96	1.96	1.96	1.96	1.95	1.94	1.93	1.92	1.92
	1.0	2.00	2.00	2.00	2.00	2.00	2.00	2.00	2.00	2.00	2.00	2.00	2.00	2.00	2.00	2.00	2.00	2.00	2.00
$K_1 = \frac{I_1}{I_2}\frac{H_2}{H_1}$	1.2	2.03	2.04	2.04	2.05	2.06	2.07	2.07	2.08	2.08	2.09	2.10	2.10	2.11	2.13	2.15	2.17	2.18	2.20
	1.4	2.07	2.09	2.11	2.12	2.14	2.16	2.17	2.18	2.20	2.21	2.22	2.23	2.24	2.29	2.33	2.37	2.40	2.42
$\eta_1 = \frac{H_1}{H_2}\sqrt{\frac{N_1}{N_2}\frac{I_2}{I_1}}$	1.6	2.13	2.16	2.19	2.22	2.25	2.27	2.30	2.32	2.34	2.36	2.37	2.39	2.41	2.48	2.54	2.59	2.63	2.67
	1.8	2.22	2.27	2.31	2.35	2.39	2.42	2.45	2.48	2.50	2.53	2.55	2.57	2.59	2.69	2.76	2.83	2.88	2.93
N_1——上段柱的	2.0	2.35	2.41	2.46	2.50	2.55	2.59	2.62	2.66	2.69	2.72	2.75	2.77	2.80	2.91	3.00	3.08	3.14	3.20
轴心力；	2.2	2.51	2.57	2.63	2.68	2.73	2.77	2.81	2.85	2.89	2.92	2.95	2.98	3.01	3.14	3.25	3.33	3.41	3.47
N_2——下段柱的	2.4	2.68	2.75	2.81	2.87	2.92	2.97	3.01	3.05	3.09	3.13	3.17	3.20	3.24	3.38	3.50	3.59	3.68	3.75
轴心力	2.6	2.87	2.94	3.00	3.06	3.12	3.17	3.22	3.27	3.31	3.35	3.39	3.43	3.46	3.62	3.75	3.86	3.95	4.03
	2.8	3.06	3.14	3.20	3.27	3.33	3.38	3.43	3.48	3.53	3.58	3.62	3.66	3.70	3.87	4.01	4.13	4.23	4.32
	3.0	3.26	3.34	3.41	3.47	3.54	3.60	3.65	3.70	3.75	3.80	3.85	3.89	3.93	4.12	4.27	4.40	4.51	4.61

注：表中的计算长度系数 μ_2 值系按下式计算得出：

$$\mathrm{tg}\frac{\pi\eta_1}{\mu_2} + \eta_1 K_1 \cdot \mathrm{tg}\frac{\pi}{\mu_2} = 0$$

表 D-5　柱上端为自由的双阶柱下段的计算长度系数 μ_3

简　图	K_1 / K_2 / η_1 / η_2		0.05										
			0.2	0.3	0.4	0.5	0.6	0.7	0.8	0.9	1.0	1.1	1.2
	0.2	0.2	2.02	2.03	2.04	2.05	2.05	2.06	2.07	2.08	2.09	2.10	2.10
		0.4	2.08	2.11	2.15	2.19	2.22	2.25	2.29	2.32	2.35	2.39	2.42
		0.6	2.20	2.29	2.37	2.45	2.52	2.60	2.67	2.73	2.80	2.87	2.93
		0.8	2.42	2.57	2.71	2.83	2.95	3.06	3.17	3.27	3.37	3.47	3.56
		1.0	2.75	2.95	3.13	3.30	3.45	3.60	3.74	3.87	4.00	4.13	4.25
		1.2	3.13	3.38	3.60	3.80	4.00	4.18	4.35	4.51	4.67	4.82	4.97
	0.4	0.2	2.04	2.05	2.05	2.06	2.07	2.08	2.09	2.09	2.10	2.11	2.12
		0.4	2.10	2.14	2.17	2.20	2.24	2.27	2.31	2.34	2.37	2.40	2.43
		0.6	2.24	2.32	2.40	2.47	2.54	2.62	2.68	2.75	2.82	2.88	2.94
		0.8	2.47	2.60	2.73	2.85	2.97	3.08	3.19	3.29	3.38	3.48	3.57
		1.0	2.79	2.98	3.15	3.32	3.47	3.62	3.75	3.89	4.02	4.14	4.26
		1.2	3.18	3.41	3.62	3.82	4.01	4.19	4.36	4.52	4.68	4.83	4.98
	0.6	0.2	2.09	2.09	2.10	2.10	2.11	2.12	2.12	2.13	2.14	2.15	2.15
		0.4	2.17	2.19	2.22	2.25	2.28	2.31	2.34	2.38	2.41	2.44	2.47
		0.6	2.32	2.38	2.45	2.52	2.59	2.66	2.72	2.79	2.85	2.91	2.97
		0.8	2.56	2.67	2.79	2.90	3.01	3.11	3.22	3.32	3.41	3.50	3.60
		1.0	2.88	3.04	3.20	3.36	3.50	3.65	3.78	3.91	4.04	4.16	4.26
		1.2	3.26	3.46	3.66	3.86	4.04	4.22	4.38	4.55	4.70	4.85	5.00
	0.8	0.2	2.29	2.24	2.22	2.21	2.21	2.22	2.22	2.22	2.23	2.23	2.24
		0.4	2.37	2.34	2.34	2.36	2.38	2.40	2.43	2.45	2.48	2.51	2.54
		0.6	2.52	2.52	2.56	2.61	2.67	2.73	2.79	2.85	2.91	2.96	3.02
		0.8	2.74	2.79	2.88	2.98	3.08	3.17	3.27	3.36	3.46	3.55	3.63
		1.0	3.04	3.15	3.28	3.42	3.56	3.69	3.82	3.95	4.07	4.19	4.31
		1.2	3.39	3.55	3.73	3.91	4.08	4.25	4.42	4.58	4.73	4.88	5.02
	1.0	0.2	2.69	2.57	2.51	2.48	2.46	2.45	2.45	2.44	2.44	2.44	2.44
		0.4	2.75	2.64	2.60	2.59	2.59	2.59	2.60	2.62	2.63	2.65	2.67
		0.6	2.86	2.78	2.77	2.79	2.83	2.87	2.91	2.96	3.01	3.06	3.10
		0.8	3.04	3.01	3.05	3.11	3.19	3.27	3.35	3.44	3.52	3.61	3.69
		1.0	3.29	3.32	3.41	3.52	3.64	3.76	3.89	4.01	4.13	4.24	4.35
		1.2	3.60	3.69	3.83	3.99	4.15	4.31	4.47	4.62	4.77	4.92	5.06
	1.2	0.2	3.16	3.00	2.92	2.87	2.84	2.81	2.80	2.79	2.78	2.77	2.77
		0.4	3.21	3.05	2.98	2.94	2.92	2.90	2.90	2.90	2.90	2.91	2.92
		0.6	3.30	3.15	3.10	3.08	3.08	3.10	3.12	3.15	3.18	3.22	3.26
		0.8	3.43	3.32	3.30	3.33	3.37	3.43	3.49	3.56	3.63	3.71	3.78
		1.0	3.62	3.57	3.60	3.68	3.77	3.87	3.98	4.09	4.20	4.31	4.42
		1.2	3.88	3.88	3.98	4.11	4.25	4.39	4.54	4.68	4.83	4.97	5.10
	1.4	0.2	3.66	3.46	3.36	3.29	3.25	3.23	3.20	3.19	3.18	3.17	3.16
		0.4	3.70	3.50	3.40	3.35	3.31	3.29	3.27	3.26	3.26	3.26	3.26
		0.6	3.77	3.58	3.49	3.45	3.43	3.42	3.42	3.43	3.45	3.47	3.49
		0.8	3.87	3.70	3.64	3.63	3.64	3.67	3.70	3.75	3.81	3.86	3.92
		1.0	4.02	3.89	3.87	3.90	3.96	4.04	4.12	4.22	4.31	4.41	4.51
		1.2	4.23	4.15	4.19	4.27	4.39	4.51	4.64	4.77	4.91	5.04	5.17



$$K_1 = \frac{I_1}{I_3} \cdot \frac{H_3}{H_1}$$

$$K_2 = \frac{I_2}{I_3} \cdot \frac{H_3}{H_2}$$

$$\eta_1 = \frac{H_1}{H_3}\sqrt{\frac{N_1}{N_3} \cdot \frac{I_3}{I_1}}$$

$$\eta_2 = \frac{H_2}{H_3}\sqrt{\frac{N_2}{N_3} \cdot \frac{I_3}{I_2}}$$

N_1——上段柱的轴心力；
N_2——中段柱的轴心力；
N_3——下段柱的轴心力

续表 D-5

简　图	K_1 / K_2 / η_1 / η_2		0.10										
			0.2	0.3	0.4	0.5	0.6	0.7	0.8	0.9	1.0	1.1	1.2
	0.2	0.2	2.03	2.03	2.04	2.05	2.06	2.07	2.08	2.08	2.09	2.10	2.11
		0.4	2.09	2.12	2.16	2.19	2.23	2.26	2.29	2.33	2.36	2.39	2.42
		0.6	2.21	2.30	2.38	2.46	2.53	2.60	2.67	2.74	2.81	2.87	2.93
		0.8	2.44	2.58	2.71	2.84	2.96	3.07	3.17	3.28	3.37	3.47	3.56
		1.0	2.76	2.96	3.14	3.30	3.46	3.60	3.74	3.88	4.01	4.13	4.25
		1.2	3.15	3.39	3.61	3.81	4.00	4.18	4.35	4.52	4.68	4.83	4.98
	0.4	0.2	2.07	2.07	2.08	2.08	2.09	2.10	2.11	2.12	2.12	2.13	2.14
		0.4	2.14	2.17	2.20	2.23	2.26	2.30	2.33	2.36	2.39	4.42	2.46
		0.6	2.28	2.36	2.43	2.50	2.57	2.64	2.71	2.77	2.84	2.90	2.96
		0.8	2.53	2.65	2.77	2.88	3.00	3.10	3.21	3.31	3.40	3.50	3.59
		1.0	2.85	3.02	3.19	3.34	3.49	3.64	3.77	3.91	4.03	4.16	4.28
		1.2	3.24	3.45	3.65	3.85	4.03	4.21	4.38	4.54	4.70	4.85	4.99
	0.6	0.2	2.22	2.19	2.18	2.17	2.18	2.18	2.19	2.19	2.20	2.20	2.21
		0.4	2.31	2.30	2.31	2.33	2.35	2.38	2.41	2.44	2.47	2.49	2.52
		0.6	2.48	2.49	2.54	2.60	2.66	2.72	2.78	2.84	2.90	2.96	3.02
		0.8	2.72	2.78	2.87	2.97	3.07	3.17	3.27	3.36	3.46	3.55	3.64
		1.0	3.04	3.15	3.28	3.42	3.56	3.70	3.83	3.95	4.08	4.20	4.31
		1.2	3.40	3.56	3.74	3.91	4.09	4.26	4.42	4.58	4.73	4.88	5.03
	0.8	0.2	2.63	2.49	2.43	2.40	2.38	2.37	2.37	2.36	2.36	2.37	2.37
		0.4	2.71	2.59	2.55	2.54	2.54	2.55	2.57	2.59	2.61	2.63	2.65
		0.6	2.86	2.76	2.76	2.78	2.82	2.86	2.91	2.96	3.01	3.07	3.12
		0.8	3.06	3.02	3.06	3.13	3.20	3.29	3.37	3.46	3.54	3.63	3.71
		1.0	3.33	3.35	3.44	3.55	3.67	3.79	3.90	4.03	4.15	4.26	4.37
		1.2	3.65	3.73	3.86	4.02	4.18	4.34	4.49	4.64	4.79	4.94	5.08
	1.0	0.2	3.18	2.95	2.84	2.77	2.73	2.70	2.68	2.67	2.66	2.65	2.65
		0.4	3.24	3.03	2.93	2.88	2.85	2.84	2.84	2.84	2.85	2.86	2.87
		0.6	3.36	3.16	3.09	3.07	3.08	3.09	3.12	3.15	3.19	3.23	3.27
		0.8	3.52	3.37	3.34	3.36	3.41	3.46	3.53	3.60	3.67	3.75	3.82
		1.0	3.74	3.64	3.67	3.74	3.83	3.93	4.03	4.14	4.25	4.35	4.46
		1.2	4.00	3.97	4.05	4.17	4.31	4.45	4.59	4.73	4.87	5.01	5.14
	1.2	0.2	3.77	3.47	3.32	3.23	3.17	3.12	3.09	3.07	3.05	3.04	3.03
		0.4	3.82	3.53	3.39	3.31	3.26	3.22	3.20	3.19	3.19	3.19	3.19
		0.6	3.91	3.64	3.51	3.45	3.42	3.42	3.42	3.43	3.45	3.48	3.50
		0.8	4.04	3.80	3.71	3.68	3.69	3.72	3.76	3.81	3.86	3.92	3.98
		1.0	4.21	4.02	3.97	3.99	4.05	4.12	4.20	4.29	4.39	4.48	4.58
		1.2	4.43	4.30	4.31	4.38	4.48	4.60	4.72	4.85	4.98	5.11	5.24
	1.4	0.2	4.37	4.01	3.82	3.71	3.63	3.58	3.54	3.51	3.49	3.47	3.45
		0.4	4.41	4.06	3.88	3.77	3.70	3.66	3.63	3.60	3.59	3.58	3.57
		0.6	4.48	4.15	3.98	3.89	3.83	3.80	3.79	3.78	3.79	3.80	3.81
		0.8	4.59	4.28	4.13	4.07	4.04	4.04	4.06	4.08	4.12	4.16	4.21
		1.0	4.74	4.45	4.35	4.32	4.34	4.38	4.43	4.50	4.58	4.66	4.74
		1.2	4.92	4.69	4.63	4.65	4.72	4.80	4.90	5.10	5.13	5.24	5.36

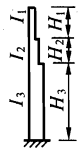

$$K_1 = \frac{I_1}{I_3} \cdot \frac{H_3}{H_1}$$

$$K_2 = \frac{I_2}{I_3} \cdot \frac{H_3}{H_2}$$

$$\eta_1 = \frac{H_1}{H_3}\sqrt{\frac{N_1}{N_3} \cdot \frac{I_3}{I_1}}$$

$$\eta_2 = \frac{H_2}{H_3}\sqrt{\frac{N_2}{N_3} \cdot \frac{I_3}{I_2}}$$

N_1——上段柱的轴心力；
N_2——中段柱的轴心力；
N_3——下段柱的轴心力

续表 D-5

简图	η_1	η_2	K_1 0.20 / K_2 0.2	0.3	0.4	0.5	0.6	0.7	0.8	0.9	1.0	1.1	1.2
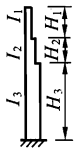	0.2	0.2	2.04	2.04	2.05	2.06	2.07	2.08	2.08	2.09	2.10	2.11	2.12
		0.4	2.10	2.13	2.17	2.20	2.24	2.27	2.30	2.34	2.37	2.40	2.43
		0.6	2.23	2.31	2.39	2.47	2.54	2.61	2.68	2.75	2.82	2.88	2.94
		0.8	2.46	2.60	2.73	2.85	2.97	3.08	3.18	3.29	3.38	3.48	3.57
		1.0	2.79	2.98	3.15	3.32	3.47	3.61	3.75	3.89	4.02	4.14	4.26
		1.2	3.18	3.41	3.62	3.82	4.01	4.19	4.36	4.52	4.68	4.83	4.98
	0.4	0.2	2.15	2.13	2.13	2.14	2.14	2.15	2.15	2.16	2.17	2.17	2.18
		0.4	2.24	2.24	2.26	2.29	2.32	2.35	2.38	2.41	2.44	2.47	2.50
		0.6	2.40	2.44	2.50	2.56	2.63	2.69	2.76	2.82	2.88	2.94	3.00
		0.8	2.66	2.74	2.84	2.95	3.05	3.15	3.25	3.35	3.44	3.53	3.62
		1.0	2.98	3.12	3.25	3.40	3.54	3.68	3.81	3.94	4.07	4.19	4.30
		1.2	3.35	3.53	3.71	3.90	4.08	4.25	4.41	4.57	4.73	4.87	5.02
	0.6	0.2	2.57	2.42	2.37	2.34	2.33	2.32	2.32	2.32	2.32	2.32	2.33
		0.4	2.67	2.54	2.50	2.50	2.51	2.52	2.54	2.56	2.58	2.61	2.63
		0.6	2.83	2.74	2.73	2.76	2.80	2.85	2.90	2.96	3.01	3.06	3.12
		0.8	3.06	3.01	3.05	3.12	3.20	3.29	3.38	3.46	3.55	3.63	3.72
		1.0	3.34	3.35	3.44	3.56	3.68	3.80	3.92	4.04	4.15	4.27	4.38
		1.2	3.67	3.74	3.88	4.03	4.19	4.35	4.50	4.65	4.80	4.94	5.08
	0.8	0.2	3.25	2.96	2.82	2.74	2.69	2.66	2.64	2.62	2.61	2.61	2.60
		0.4	3.33	3.05	2.93	2.87	2.84	2.83	2.83	2.83	2.84	2.85	2.87
		0.6	3.45	3.21	3.12	3.10	3.10	3.12	3.14	3.18	3.22	3.26	3.30
		0.8	3.63	3.44	3.39	3.41	3.45	3.51	3.57	3.64	3.71	3.79	3.86
		1.0	3.86	3.73	3.73	3.80	3.88	3.98	4.08	4.18	4.29	4.39	4.50
		1.2	4.13	4.07	4.13	4.24	4.36	4.50	4.64	4.78	4.91	5.05	5.18
	1.0	0.2	4.00	3.60	3.39	3.26	3.18	3.13	3.08	3.05	3.03	3.01	3.00
		0.4	4.06	3.67	3.48	3.37	3.30	3.26	3.23	3.21	3.21	3.20	3.20
		0.6	4.15	3.79	3.63	3.54	3.50	3.48	3.49	3.50	3.51	3.54	3.57
		0.8	4.29	3.97	3.84	3.80	3.79	3.81	3.85	3.90	3.95	4.01	4.07
		1.0	4.48	4.21	4.13	4.13	4.17	4.23	4.31	4.39	4.48	4.57	4.66
		1.2	4.70	4.49	4.47	4.52	4.60	4.71	4.82	4.94	5.07	5.19	5.31
	1.2	0.2	4.76	4.26	4.00	3.83	3.72	3.65	3.59	3.54	3.51	3.48	3.46
		0.4	4.81	4.32	4.07	3.91	3.82	3.75	3.70	3.67	3.65	3.63	3.62
		0.6	4.89	4.43	4.19	4.05	3.98	3.93	3.91	3.89	3.89	3.90	3.91
		0.8	5.00	4.57	4.36	4.26	4.21	4.20	4.21	4.23	4.26	4.30	4.34
		1.0	5.15	4.76	4.59	4.53	4.53	4.55	4.60	4.66	4.73	4.80	4.88
		1.2	5.34	5.00	4.88	4.87	4.91	4.98	5.07	5.17	5.27	5.38	5.49
	1.4	0.2	5.53	4.94	4.62	4.42	4.29	4.19	4.12	4.06	4.02	3.98	3.95
		0.4	5.57	4.99	4.68	4.49	4.36	4.27	4.21	4.16	4.13	4.10	4.08
		0.6	5.64	5.07	4.78	4.60	4.49	4.42	4.38	4.35	4.33	4.32	4.32
		0.8	5.74	5.19	4.92	4.77	4.69	4.64	4.62	4.62	4.63	4.65	4.67
		1.0	5.86	5.35	5.12	5.00	4.95	4.94	4.96	4.99	5.03	5.09	5.15
		1.2	6.02	5.55	5.36	5.29	5.28	5.31	5.37	5.44	5.52	5.61	5.71

$$K_1 = \frac{I_1}{I_3} \cdot \frac{H_3}{H_1}$$

$$K_2 = \frac{I_2}{I_3} \cdot \frac{H_3}{H_2}$$

$$\eta_1 = \frac{H_1}{H_3}\sqrt{\frac{N_1}{N_3} \cdot \frac{I_3}{I_1}}$$

$$\eta_2 = \frac{H_2}{H_3}\sqrt{\frac{N_2}{N_3} \cdot \frac{I_3}{I_2}}$$

N_1——上段柱的轴心力；

N_2——中段柱的轴心力；

N_3——下段柱的轴心力

续表 D-5

简　图	K_1 / K_2 / η_1 / η_2		0.30										
			0.2	0.3	0.4	0.5	0.6	0.7	0.8	0.9	1.0	1.1	1.2
	0.2	0.2	2.05	2.05	2.06	2.07	2.08	2.09	2.09	2.10	2.11	2.12	2.13
		0.4	2.12	2.15	2.18	2.21	2.25	2.28	2.31	2.35	2.38	2.41	2.44
		0.6	2.25	2.33	2.41	2.48	2.56	2.63	2.69	2.76	2.83	2.89	2.95
		0.8	2.49	2.62	2.75	2.87	2.98	3.09	3.20	3.30	3.39	3.49	3.58
		1.0	3.82	3.00	3.17	3.33	3.48	3.63	3.76	3.90	4.02	4.15	4.27
		1.2	3.20	3.43	3.64	3.83	4.02	4.20	4.37	4.53	4.69	4.84	4.99
	0.4	0.2	2.26	2.21	2.20	2.19	2.19	2.20	2.20	2.21	2.21	2.22	2.23
		0.4	2.36	2.33	2.33	2.35	2.38	2.40	2.43	2.46	2.49	2.51	2.54
		0.6	2.54	2.54	2.58	2.63	2.69	2.75	2.81	2.87	2.93	2.99	3.04
		0.8	2.79	2.83	2.91	3.01	3.10	3.20	3.30	3.39	3.48	3.57	3.66
		1.0	3.11	3.20	3.32	3.46	3.59	3.72	3.85	3.98	4.10	4.22	4.33
		1.2	3.47	3.60	3.77	3.95	4.12	4.28	4.45	4.60	4.75	4.90	5.04
	0.6	0.2	2.93	2.68	2.57	2.52	2.49	2.47	2.46	2.45	2.45	2.45	2.45
		0.4	3.02	2.79	2.71	2.67	2.66	2.66	2.67	2.69	2.70	2.72	2.74
		0.6	3.17	2.98	2.93	2.93	2.95	2.98	3.02	3.07	3.11	3.16	3.21
		0.8	3.37	3.24	3.23	3.27	3.33	3.41	3.48	3.56	3.64	3.72	3.80
		1.0	3.63	3.56	3.60	3.69	3.79	3.90	4.01	4.12	4.23	4.34	4.45
		1.2	3.94	3.92	4.02	4.15	4.29	4.43	4.58	4.72	4.87	5.01	5.14
	0.8	0.2	3.78	3.38	3.18	3.06	2.98	2.93	2.89	2.86	2.84	2.83	2.82
		0.4	3.85	3.47	3.28	3.18	3.12	3.09	3.07	3.06	3.06	3.06	3.06
		0.6	3.96	3.61	3.46	3.39	3.36	3.35	3.36	3.38	3.41	3.44	3.47
		0.8	4.12	3.82	3.70	3.67	3.68	3.72	3.76	3.82	3.88	3.94	4.01
		1.0	4.32	4.07	4.01	4.03	4.08	4.16	4.24	4.33	4.43	4.52	4.62
		1.2	4.57	4.38	4.38	4.44	4.54	4.66	4.78	4.90	5.03	5.16	5.29
	1.0	0.2	4.68	4.15	3.86	3.69	3.57	3.49	3.43	3.38	3.35	3.32	3.30
		0.4	4.73	4.21	3.94	3.78	3.68	3.61	3.57	3.54	3.51	3.50	3.49
		0.6	4.82	4.33	4.08	3.95	3.87	3.83	3.80	3.80	3.80	3.81	3.83
		0.8	4.94	4.49	4.28	4.18	4.14	4.13	4.14	4.17	4.20	4.25	4.29
		1.0	5.10	4.70	4.53	4.48	4.48	4.51	4.56	4.62	4.70	4.77	4.85
		1.2	5.30	4.95	4.84	4.83	4.88	4.96	5.05	5.15	5.26	5.37	5.48
	1.2	0.2	5.58	4.93	4.57	4.35	4.20	4.10	4.01	3.95	3.90	3.86	3.83
		0.4	5.62	4.98	4.64	4.43	4.29	4.19	4.12	4.07	4.03	4.01	3.98
		0.6	5.70	5.08	4.75	4.56	4.44	4.37	4.32	4.29	4.27	4.26	4.26
		0.8	5.80	5.21	4.91	4.75	4.66	4.61	4.59	4.59	4.60	4.62	4.65
		1.0	5.93	5.38	5.12	5.00	4.95	4.94	4.95	4.99	5.03	5.09	5.15
		1.2	6.10	5.59	5.38	5.31	5.30	5.30	5.39	5.46	5.54	5.63	5.73
	1.4	0.2	6.49	5.72	5.30	5.03	4.85	4.72	4.62	4.54	4.48	4.43	4.38
		0.4	6.53	5.77	5.35	5.10	4.93	4.80	4.71	4.64	4.59	4.55	4.51
		0.6	6.59	5.85	5.45	5.21	5.05	4.95	4.87	4.82	4.78	4.76	4.74
		0.8	6.68	5.96	5.59	5.37	5.24	5.15	5.10	5.08	5.06	5.06	5.07
		1.0	6.79	6.10	5.76	5.58	5.48	5.43	5.41	5.41	5.44	5.47	5.51
		1.2	6.93	6.28	5.98	5.84	5.78	5.76	5.79	5.83	5.89	5.95	6.03



$$K_1 = \frac{I_1}{I_3} \cdot \frac{H_3}{H_1}$$

$$K_2 = \frac{I_2}{I_3} \cdot \frac{H_3}{H_2}$$

$$\eta_1 = \frac{H_1}{H_3}\sqrt{\frac{N_1}{N_3} \cdot \frac{I_3}{I_1}}$$

$$\eta_2 = \frac{H_2}{H_3}\sqrt{\frac{N_2}{N_3} \cdot \frac{I_3}{I_2}}$$

N_1——上段柱的轴心力；
N_2——中段柱的轴心力；
N_3——下段柱的轴心力

注：表中的计算长度系数 μ_3 值系按下式算得：

$$\frac{\eta_1 K_1}{\eta_2 K_2} \cdot \operatorname{tg}\frac{\pi\eta_1}{\mu_3} \cdot \operatorname{tg}\frac{\pi\eta_2}{\mu_3} + \eta_1 K_1 \cdot \operatorname{tg}\frac{\pi\eta_1}{\mu_3} \cdot \operatorname{tg}\frac{\pi}{\mu_3} + \eta_2 K_2 \cdot \operatorname{tg}\frac{\pi\eta_2}{\mu_3} \cdot \operatorname{tg}\frac{\pi}{\mu_3} - 1 = 0$$

表 D-6　柱顶可移动但不转动的双阶柱下段的计算长度系数 μ_3

简　图	K_1 / K_2 / η_1	η_2	0.05										
			0.2	0.3	0.4	0.5	0.6	0.7	0.8	0.9	1.0	1.1	1.2
	0.2	0.2	1.99	1.99	2.00	2.00	2.01	2.02	2.02	2.03	2.04	2.05	2.06
		0.4	2.03	2.06	2.09	2.12	2.16	2.19	2.22	2.25	2.29	2.32	2.35
		0.6	2.12	2.20	2.28	2.36	2.43	2.50	2.57	2.64	2.71	2.77	2.83
		0.8	2.28	2.43	2.57	2.70	2.82	2.94	3.04	3.15	3.25	3.34	3.43
		1.0	2.53	2.76	2.96	3.13	3.29	3.44	3.59	3.72	3.85	3.98	4.10
		1.2	2.86	3.15	3.39	3.61	3.80	3.99	4.16	4.33	4.49	4.64	4.79
	0.4	0.2	1.99	1.99	2.00	2.01	2.01	2.02	2.03	2.04	2.04	2.05	2.06
		0.4	2.03	2.06	2.09	2.13	2.16	2.19	2.23	2.26	2.29	2.32	2.35
		0.6	2.12	2.20	2.28	2.36	2.44	2.51	2.58	2.64	2.71	2.77	2.84
		0.8	2.29	2.44	2.58	2.71	2.83	2.94	3.05	3.15	3.25	3.35	3.44
		1.0	2.54	2.77	2.96	3.14	3.30	3.45	3.59	3.73	3.85	3.98	4.10
		1.2	2.87	3.15	3.40	3.61	3.81	3.99	4.17	4.33	4.49	4.65	4.79
	0.6	0.2	1.99	1.98	2.00	2.01	2.02	2.03	2.04	2.04	2.05	2.06	2.07
		0.4	2.04	2.07	2.10	2.14	2.17	2.20	2.23	2.27	2.30	2.33	2.36
		0.6	2.13	2.21	2.29	2.37	2.45	2.52	2.59	2.65	2.72	2.78	2.84
		0.8	2.30	2.45	2.59	2.72	2.84	2.95	3.06	3.16	3.26	3.35	3.44
		1.0	2.56	2.78	2.97	3.15	3.31	3.46	3.60	3.73	3.86	3.99	4.11
		1.2	2.89	3.17	3.41	3.62	3.82	4.00	4.17	4.34	4.50	4.65	4.80
	0.8	0.2	2.00	2.01	2.02	2.02	2.03	2.04	2.05	2.05	2.06	2.07	2.08
		0.4	2.05	2.08	2.12	2.15	2.18	2.21	2.25	2.28	2.31	2.34	2.37
		0.6	2.15	2.23	2.31	2.39	2.46	2.53	2.60	2.67	2.73	2.79	2.85
		0.8	2.32	2.47	2.61	2.73	2.85	2.96	3.07	3.17	3.27	3.36	3.45
		1.0	2.59	2.80	2.99	3.16	3.32	3.47	3.61	3.74	3.87	3.99	4.11
		1.2	2.92	3.19	3.42	3.63	3.83	4.01	4.18	4.35	4.51	4.66	4.81
	1.0	0.2	2.02	2.02	2.03	2.04	2.05	2.05	2.06	2.07	2.08	2.09	2.09
		0.4	2.07	2.10	2.14	2.17	2.20	2.23	2.26	2.30	2.33	2.36	2.39
		0.6	2.17	2.26	2.33	2.41	2.48	2.55	2.62	2.68	2.75	2.81	2.87
		0.8	2.36	2.50	2.63	2.76	2.87	2.98	3.08	3.19	3.28	3.38	3.47
		1.0	2.62	2.83	3.01	3.18	3.34	3.48	3.62	3.75	3.88	4.01	4.12
		1.2	2.95	3.21	3.44	3.65	3.82	4.02	4.20	4.36	4.52	4.67	4.81
	1.2	0.2	2.04	2.05	2.06	2.06	2.07	2.08	2.09	2.09	2.10	2.11	2.12
		0.4	2.10	2.13	2.17	2.20	2.23	2.26	2.29	2.32	2.35	2.38	2.41
		0.6	2.22	2.29	2.37	2.44	2.51	2.58	2.64	2.71	2.77	2.83	2.89
		0.8	2.41	2.54	2.67	2.78	2.90	3.00	3.11	3.20	3.30	3.39	3.48
		1.0	2.68	2.87	3.04	3.21	3.36	3.50	3.64	3.77	3.90	4.02	4.14
		1.2	3.00	3.25	3.47	3.67	3.86	4.04	4.21	4.37	4.53	4.68	4.83
	1.4	0.2	2.10	2.10	2.10	2.11	2.11	2.12	2.13	2.13	2.14	2.15	2.15
		0.4	2.17	2.19	2.21	2.24	2.27	2.30	2.33	2.36	2.39	2.41	2.44
		0.6	2.29	2.35	2.41	2.48	2.55	2.61	2.67	2.74	2.80	2.86	2.91
		0.8	2.48	2.60	2.71	2.82	2.93	3.03	3.13	3.23	3.32	3.41	3.50
		1.0	2.74	2.92	3.08	3.24	3.39	3.53	3.66	3.79	3.92	4.04	4.15
		1.2	3.06	3.29	3.50	3.70	3.89	4.06	4.23	4.39	4.55	4.70	4.84



$$K_1 = \frac{I_1}{I_3} \cdot \frac{H_3}{H_1}$$

$$K_2 = \frac{I_2}{I_3} \cdot \frac{H_3}{H_2}$$

$$\eta_1 = \frac{H_1}{H_3}\sqrt{\frac{N_1}{N_3} \cdot \frac{I_3}{I_1}}$$

$$\eta_2 = \frac{H_2}{H_3}\sqrt{\frac{N_2}{N_3} \cdot \frac{I_3}{I_2}}$$

N_1——上段柱的轴心力；
N_2——中段柱的轴心力；
N_3——下段柱的轴心力

续表 D-6

简　图	η_1	K_1 / K_2 / η_2	0.10										
			0.2	0.3	0.4	0.5	0.6	0.7	0.8	0.9	1.0	1.1	1.2
	0.2	0.2	1.96	1.96	1.97	1.97	1.98	1.98	1.99	2.00	2.00	2.01	2.02
		0.4	2.00	2.02	2.05	2.08	2.11	2.14	2.17	2.20	2.23	2.26	2.29
		0.6	2.07	2.14	2.22	2.29	2.36	2.43	2.50	2.56	2.63	2.69	2.75
		0.8	2.20	2.35	2.48	2.61	2.73	2.84	2.94	3.05	3.14	3.24	3.33
		1.0	2.41	2.64	2.83	3.01	3.17	3.32	3.46	3.59	3.72	3.85	3.97
		1.2	2.70	2.99	3.23	3.45	3.65	3.84	4.01	4.18	4.34	4.49	4.64
	0.4	0.2	1.96	1.97	1.97	1.98	1.98	1.99	2.00	2.00	2.01	2.02	2.03
		0.4	2.00	2.03	2.06	2.09	2.12	2.15	2.18	2.21	2.24	2.27	2.30
		0.6	2.08	2.15	2.23	2.30	2.37	2.44	2.51	2.57	2.64	2.70	2.76
		0.8	2.21	2.36	2.49	2.62	2.73	2.85	2.95	3.05	3.15	3.24	3.34
		1.0	2.43	2.65	2.84	3.02	3.18	3.33	3.47	3.60	3.73	3.85	3.97
		1.2	2.71	3.00	3.24	3.46	3.66	3.85	4.02	4.19	4.34	4.49	4.64
	0.6	0.2	1.97	1.98	1.98	1.99	2.00	2.00	2.01	2.02	2.02	2.03	2.04
		0.4	2.01	2.04	2.07	2.10	2.13	2.16	2.19	2.22	2.26	2.29	2.32
		0.6	2.09	2.17	2.24	2.32	2.39	2.46	2.52	2.59	2.65	2.71	2.77
		0.8	2.23	2.38	2.51	2.64	2.75	2.86	2.97	3.07	3.16	3.26	3.35
		1.0	2.45	2.68	2.86	3.03	3.19	3.34	3.48	3.61	3.74	3.86	3.98
		1.2	2.74	3.02	3.26	3.48	3.67	3.86	4.03	4.20	4.35	4.50	4.65
	0.8	0.2	1.99	1.99	2.00	2.01	2.01	2.02	2.03	2.04	2.04	2.05	2.06
		0.4	2.03	2.06	2.09	2.12	2.15	2.19	2.22	2.25	2.28	2.31	2.34
		0.6	2.12	2.19	2.27	2.34	2.41	2.48	2.55	2.61	2.67	2.73	2.79
		0.8	2.27	2.41	2.54	2.66	2.78	2.89	2.99	3.09	3.18	3.28	3.37
		1.0	2.49	2.70	2.89	3.06	3.21	3.36	3.50	3.63	3.76	3.88	4.00
		1.2	2.78	3.05	3.29	3.50	3.69	3.88	4.05	4.21	4.37	4.52	4.66
	1.0	0.2	2.01	2.02	2.03	2.04	2.04	2.05	2.06	2.07	2.07	2.08	2.09
		0.4	2.06	2.10	2.13	2.16	2.19	2.22	2.25	2.28	2.31	2.34	2.37
		0.6	2.16	2.24	2.31	2.38	2.45	2.51	2.58	2.64	2.70	2.76	2.82
		0.8	2.32	2.46	2.58	2.70	2.81	2.92	3.02	3.12	3.21	3.30	3.39
		1.0	2.55	2.75	2.93	3.09	3.25	3.39	3.53	3.66	3.78	3.90	4.02
		1.2	2.84	3.10	3.32	3.53	3.72	3.90	4.07	4.23	4.39	4.54	4.68
	1.2	0.2	2.07	2.08	2.08	2.09	2.09	2.10	2.11	2.11	2.12	2.13	2.13
		0.4	2.13	2.16	2.18	2.21	2.24	2.27	2.30	2.33	2.35	2.38	2.41
		0.6	2.24	2.30	2.37	2.43	2.50	2.56	2.63	2.68	2.74	2.80	2.86
		0.8	2.41	2.53	2.64	2.75	2.86	2.96	3.06	3.15	3.24	3.33	3.42
		1.0	2.64	2.82	2.98	3.14	3.29	3.43	3.56	3.69	3.81	3.93	4.04
		1.2	2.92	3.16	3.37	3.57	3.76	3.93	4.10	4.26	4.41	4.56	4.70
	1.4	0.2	2.20	2.18	2.17	2.17	2.17	2.18	2.18	2.19	2.19	2.20	2.20
		0.4	2.26	2.26	2.27	2.29	2.32	2.34	2.37	2.39	2.42	2.44	2.47
		0.6	2.37	2.41	2.46	2.51	2.57	2.63	2.68	2.74	2.80	2.85	2.91
		0.8	2.53	2.62	2.72	2.82	2.92	3.01	3.11	3.20	3.29	3.37	3.46
		1.0	2.75	2.90	3.05	3.20	3.34	3.47	3.60	3.72	3.84	3.96	4.07
		1.2	3.02	3.23	3.43	3.62	3.80	3.97	4.13	4.29	4.44	4.59	4.73



$$K_1 = \frac{I_1}{I_3} \cdot \frac{H_3}{H_1}$$

$$K_2 = \frac{I_2}{I_3} \cdot \frac{H_3}{H_2}$$

$$\eta_1 = \frac{H_1}{H_3}\sqrt{\frac{N_1}{N_3} \cdot \frac{I_3}{I_1}}$$

$$\eta_2 = \frac{H_2}{H_3}\sqrt{\frac{N_2}{N_3} \cdot \frac{I_3}{I_2}}$$

N_1——上段柱的轴心力；
N_2——中段柱的轴心力；
N_3——下段柱的轴心力

续表 D-6

简　图	K_1 / K_2 / η_1 / η_2		0.20										
			0.2	0.3	0.4	0.5	0.6	0.7	0.8	0.9	1.0	1.1	1.2
	0.2	0.2	1.94	1.93	1.93	1.93	1.93	1.93	1.94	1.94	1.95	1.95	1.96
		0.4	1.96	1.98	1.99	2.02	2.04	2.07	2.09	2.12	2.15	2.17	2.20
		0.6	2.02	2.07	2.13	2.19	2.26	2.32	2.38	2.44	2.50	2.56	2.62
		0.8	2.12	2.23	2.35	2.47	2.58	2.68	2.78	2.88	2.98	3.07	3.15
		1.0	2.28	2.47	2.65	2.82	2.97	3.12	3.26	3.39	3.51	3.63	3.75
		1.2	2.50	2.77	3.01	3.22	3.42	3.60	3.77	3.93	4.09	4.23	4.38
	0.4	0.2	1.93	1.93	1.93	1.93	1.94	1.94	1.95	1.95	1.96	1.96	1.97
		0.4	1.97	1.98	2.00	2.03	2.05	2.08	2.11	2.13	2.16	2.19	2.22
		0.6	2.03	2.08	2.14	2.21	2.27	2.33	2.40	2.46	2.52	2.58	2.63
		0.8	2.13	2.25	2.37	2.48	2.59	2.70	2.80	2.90	2.99	3.08	3.17
		1.0	2.29	2.49	2.67	2.83	2.99	3.13	3.27	3.40	3.53	3.64	3.76
		1.2	2.52	2.79	3.02	3.23	3.43	3.61	3.78	3.94	4.10	4.24	4.39
	0.6	0.2	1.95	1.95	1.95	1.95	1.96	1.96	1.97	1.97	1.98	1.98	1.99
		0.4	1.98	2.00	2.02	2.05	2.08	2.10	2.13	2.16	2.19	2.21	2.24
		0.6	2.04	2.10	2.17	2.23	2.30	2.36	2.42	2.48	2.54	2.60	2.66
		0.8	2.15	2.27	2.39	2.51	2.62	2.72	2.82	2.92	3.01	3.10	3.19
		1.0	2.32	2.52	2.70	2.86	3.01	3.16	3.29	3.42	3.55	3.66	3.78
		1.2	2.55	2.82	3.05	3.26	3.45	3.63	3.80	3.96	4.11	4.26	4.40
	0.8	0.2	1.97	1.97	1.98	1.98	1.99	1.99	2.00	2.01	2.01	2.02	2.03
		0.4	2.00	2.03	2.06	2.08	2.11	2.14	2.17	2.20	2.22	2.25	2.28
		0.6	2.08	2.14	2.21	2.27	2.34	2.40	2.46	2.52	2.58	2.64	2.69
		0.8	2.19	2.32	2.44	2.55	2.66	2.76	2.86	2.96	3.05	3.13	3.22
		1.0	2.37	2.57	2.74	2.90	3.05	3.19	3.33	3.45	3.58	3.69	3.81
		1.2	2.61	2.87	3.09	3.30	3.49	3.66	3.83	3.99	4.14	4.29	4.42
	1.0	0.2	2.01	2.02	2.03	2.03	2.04	2.05	2.05	2.06	2.07	2.07	2.08
		0.4	2.06	2.09	2.11	2.14	2.17	2.20	2.23	2.25	2.28	2.31	2.33
		0.6	2.14	2.21	2.27	2.34	2.40	2.46	2.52	2.58	2.63	2.69	2.74
		0.8	2.27	2.39	2.51	2.62	2.72	2.82	2.91	3.00	3.09	3.18	3.26
		1.0	2.46	2.64	2.81	2.96	3.10	3.24	3.37	3.50	3.61	3.73	3.84
		1.2	2.69	2.94	3.15	3.35	3.53	3.71	3.87	4.02	4.17	4.32	4.46
	1.2	0.2	2.13	2.12	2.12	2.13	2.13	2.14	2.14	2.15	2.15	2.16	2.16
		0.4	2.18	2.19	2.21	2.24	2.26	2.29	2.31	2.34	2.36	2.38	2.41
		0.6	2.27	2.32	2.37	2.43	2.49	2.54	2.60	2.65	2.70	2.76	2.81
		0.8	2.41	2.50	2.60	2.70	2.80	2.89	2.98	3.07	3.15	3.23	3.32
		1.0	2.59	2.74	2.89	3.04	3.17	3.30	3.43	3.55	3.66	3.78	3.89
		1.2	2.81	3.03	3.23	3.42	3.59	3.76	3.92	4.07	4.22	4.36	4.49
	1.4	0.2	2.35	2.31	2.29	2.28	2.27	2.27	2.27	2.27	2.27	2.28	2.28
		0.4	2.40	2.37	2.37	2.38	2.39	2.41	2.43	2.45	2.47	2.49	2.51
		0.6	2.48	2.49	2.52	2.56	2.61	2.65	2.70	2.75	2.80	2.85	2.89
		0.8	2.60	2.66	2.73	2.82	2.90	2.98	3.07	3.15	3.23	3.31	3.38
		1.0	2.77	2.88	3.01	3.14	3.26	3.38	3.50	3.62	3.73	3.84	3.94
		1.2	2.97	3.15	3.33	3.50	3.67	3.83	3.98	4.13	4.27	4.41	4.54



$$K_1 = \frac{I_1}{I_3} \cdot \frac{H_3}{H_1}$$

$$K_2 = \frac{I_2}{I_3} \cdot \frac{H_3}{H_2}$$

$$\eta_1 = \frac{H_1}{H_3}\sqrt{\frac{N_1}{N_3} \cdot \frac{I_3}{I_1}}$$

$$\eta_2 = \frac{H_2}{H_3}\sqrt{\frac{N_2}{N_3} \cdot \frac{I_3}{I_2}}$$

N_1——上段柱的轴心力；
N_2——中段柱的轴心力；
N_3——下段柱的轴心力

续表 D-6

简　图	K_1 / K_2 / η_1	η_2	0.30										
			0.2	0.3	0.4	0.5	0.6	0.7	0.8	0.9	1.0	1.1	1.2
	0.2	0.2	1.92	1.91	1.90	1.89	1.89	1.89	1.90	1.90	1.90	1.90	1.91
		0.4	1.95	1.95	1.96	1.97	1.99	2.01	2.04	2.06	2.08	2.11	2.13
		0.6	1.99	2.03	2.08	2.13	2.18	2.24	2.29	2.35	2.41	2.46	2.52
		0.8	2.07	2.16	2.27	2.37	2.47	2.57	2.66	2.75	2.84	2.93	3.01
		1.0	2.20	2.37	2.53	2.69	2.83	2.97	3.10	3.23	3.35	3.46	3.57
		1.2	2.39	2.63	2.85	3.05	3.24	3.42	3.58	3.74	3.89	4.03	4.17
	0.4	0.2	1.92	1.91	1.91	1.90	1.90	1.91	1.91	1.91	1.92	1.92	1.92
		0.4	1.95	1.96	1.97	1.99	2.01	2.03	2.05	2.08	2.10	2.12	2.15
		0.6	2.00	2.04	2.09	2.14	2.20	2.26	2.31	2.37	2.42	2.48	2.53
		0.8	2.08	2.18	2.28	2.39	2.49	2.59	2.68	2.77	2.86	2.95	3.03
		1.0	2.22	2.39	2.55	2.71	2.85	2.99	3.12	3.24	3.36	3.48	3.59
		1.2	2.41	2.65	2.87	3.07	3.26	3.43	3.60	3.75	3.90	4.04	4.18
	0.6	0.2	1.93	1.93	1.92	1.92	1.93	1.93	1.93	1.94	1.94	1.95	1.95
		0.4	1.96	1.97	1.99	2.01	2.03	2.06	2.08	2.11	2.13	2.16	2.18
		0.6	2.02	2.06	2.12	2.17	2.23	2.29	2.36	2.40	2.46	2.51	2.57
		0.8	2.11	2.21	2.32	2.42	2.52	2.62	2.71	2.80	2.89	2.98	3.06
		1.0	2.25	2.42	2.59	2.74	2.88	3.02	3.15	3.27	3.39	3.50	3.61
		1.2	2.44	2.69	2.91	3.11	3.29	3.46	3.62	3.78	3.93	4.07	4.20
	0.8	0.2	1.96	1.95	1.96	1.96	1.97	1.97	1.98	1.98	1.99	1.99	2.00
		0.4	1.99	2.01	2.03	2.05	2.08	2.10	2.13	2.15	2.18	2.21	2.23
		0.6	2.05	2.10	2.16	2.22	2.28	2.34	2.40	2.45	2.51	2.56	2.81
		0.8	2.15	2.26	2.37	2.47	2.57	2.67	2.76	2.85	2.94	3.02	3.10
		1.0	2.30	2.48	2.64	2.79	2.93	3.07	3.19	3.31	3.43	3.54	3.65
		1.2	2.50	2.74	2.96	3.15	3.33	3.50	3.66	3.81	3.96	4.10	4.23
	1.0	0.2	2.01	2.02	2.02	2.03	2.04	2.04	2.05	2.06	2.06	2.07	2.07
		0.4	2.05	2.08	2.10	2.13	2.16	2.18	2.21	2.23	2.26	2.28	2.31
		0.6	2.13	2.19	2.25	2.30	2.36	2.42	2.47	2.53	2.58	2.63	2.68
		0.8	2.24	2.35	2.45	2.55	2.65	2.74	2.83	2.92	3.00	3.08	3.16
		1.0	2.40	2.57	2.72	2.86	3.00	3.13	3.25	3.37	3.48	3.59	3.70
		1.2	2.60	2.83	3.03	3.22	3.39	3.56	3.71	3.86	4.01	4.14	4.28
	1.2	0.2	2.17	2.16	2.16	2.16	2.16	2.16	2.17	2.17	2.18	2.18	2.19
		0.4	2.22	2.22	2.24	2.26	2.28	2.30	2.32	2.34	2.36	2.39	2.41
		0.6	2.29	2.33	2.38	2.43	2.48	2.53	2.58	2.62	2.67	2.72	2.77
		0.8	2.41	2.49	2.58	2.67	2.75	2.84	2.92	3.00	3.08	3.16	3.23
		1.0	2.56	2.69	2.83	2.96	3.09	3.21	3.33	3.44	3.55	3.66	3.76
		1.2	2.74	2.94	3.13	3.30	3.47	3.63	3.78	3.92	4.06	4.20	4.33
	1.4	0.2	2.45	2.40	2.37	2.35	2.35	2.34	2.34	2.34	2.34	2.34	2.34
		0.4	2.48	2.45	2.44	2.44	2.45	2.46	2.48	2.49	2.51	2.53	2.55
		0.6	2.55	2.54	2.56	2.60	2.63	2.67	2.71	2.75	2.80	2.84	2.88
		0.8	2.64	2.68	2.74	2.81	2.89	2.96	3.04	3.11	3.18	3.25	3.33
		1.0	2.77	2.87	2.98	3.09	3.20	3.32	3.43	3.53	3.64	3.74	3.84
		1.2	2.94	3.09	3.26	3.41	3.57	3.72	3.86	4.00	4.13	4.26	4.39



$K_1 = \frac{I_1}{I_3} \cdot \frac{H_3}{H_1}$

$K_2 = \frac{I_2}{I_3} \cdot \frac{H_3}{H_2}$

$\eta_1 = \frac{H_1}{H_3}\sqrt{\frac{N_1}{N_3} \cdot \frac{I_3}{I_1}}$

$\eta_2 = \frac{H_2}{H_3}\sqrt{\frac{N_2}{N_3} \cdot \frac{I_3}{I_2}}$

N_1——上段柱的轴心力；

N_2——中段柱的轴心力；

N_3——下段柱的轴心力

注：表中的计算长度系数 μ_3 值系按下式算得：

$$\frac{\eta_1 K_1}{\eta_2 K_2} \cdot \operatorname{ctg}\frac{\pi\eta_1}{\mu_3} \cdot \operatorname{ctg}\frac{\pi\eta_2}{\mu_3} + \frac{\eta_1 K_1}{(\eta_2 K_2)^2} \cdot \operatorname{ctg}\frac{\pi\eta_1}{\mu_3} \cdot \operatorname{ctg}\frac{\pi}{\mu_3} + \frac{1}{\eta_2 K_2} \cdot \operatorname{ctg}\frac{\pi\eta_2}{\mu_3} \cdot \operatorname{ctg}\frac{\pi}{\mu_3} - 1 = 0$$

附录 E　疲劳计算的构件和连接分类

表 E　构件和连接分类

项次	简　　图	说　　明	类别
1	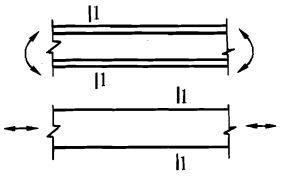	无连接处的主体金属 （1）轧制型钢 （2）钢板 a. 两边为轧制边或刨边 b. 两侧为自动、半自动切割边（切割质量标准应符合现行国家标准《钢结构工程施工质量验收规范》（GB 50205）	1 1 2
2	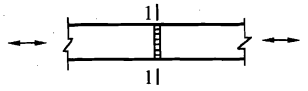	横向对接焊缝附近的主体金属 （1）符合现行国家标准《钢结构工程施工质量验收规范》（GB 50205）的一级焊缝 （2）经加工、磨平的一级焊缝	3 2
3	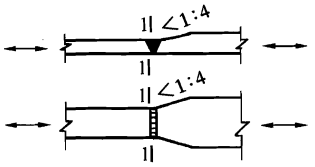	不同厚度（或宽度）横向对接焊缝附近的主体金属，焊缝加工成平滑过渡并符合一级焊缝标准	2
4	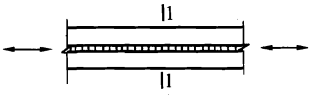	纵向对接焊缝附近的主体金属，焊缝符合二级焊缝标准	2
5	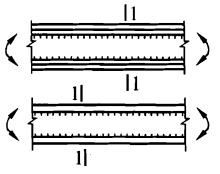	翼缘连接焊缝附近的主体金属 （1）翼缘板与腹板的连接焊缝 a. 自动焊，二级 T 形对接和角接组合焊缝 b. 自动焊，角焊缝，外观质量标准符合二级 c. 手工焊，角焊缝，外观质量标准符合二级 （2）双层翼缘板之间的连接焊缝 a. 自动焊，角焊缝，外观质量标准符合二级 b. 手工焊，角焊缝，外观质量标准符合二级	 2 3 4 3 4

续表 E

项次	简图	说明	类别
6		横向加劲肋端部附近的主体金属 （1）肋端不断弧（采用回焊） （2）肋端断弧	4 5
7	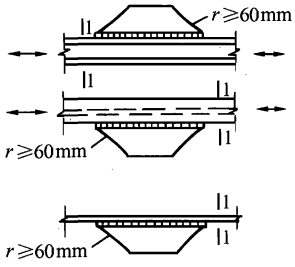	梯形节点板用对接焊缝焊于梁翼缘、腹板以及桁架构件处的主体金属，过渡处在焊后铲平、磨光、圆滑过渡，不得有焊接起弧、灭弧缺陷	5
8	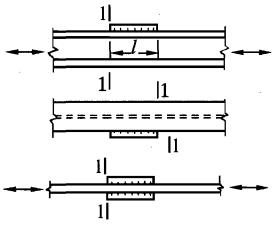	矩形节点板焊接于构件翼缘或腹板处的主体金属，$l>150$mm	7
9	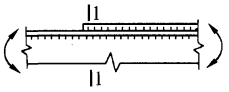	翼缘板中断处的主体金属（板端有正面焊缝）	7
10		向正面角焊缝过渡处的主体金属	6
11	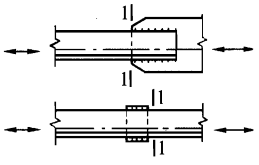	两侧面角焊缝连接端部的主体金属	8

续表 E

项次	简　　图	说　　明	类别
12	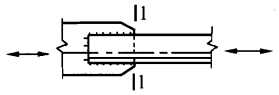	三面围焊的角焊缝端部主体金属	7
13	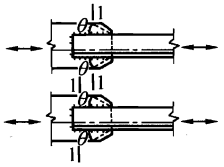	三面围焊或两侧面角焊缝连接的节点板主体金属（节点板计算宽度按应力扩散角 θ 等于 30°考虑）	7
14	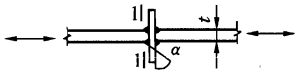	K 形坡口 T 形对接与角接组合焊缝处的主体金属，两板轴线偏离小于 $0.15t$，焊缝为二级，焊趾角 $\alpha \leqslant 45°$	5
15	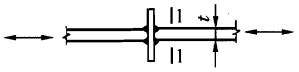	十字接头角焊缝处的主体金属，两板轴线偏离小于 $0.15t$	7
16	角焊缝	按有效截面确定的剪应力幅计算	8
17	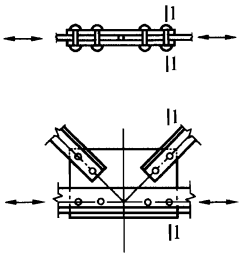	铆钉连接处的主体金属	3
18	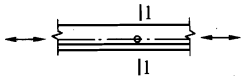	连系螺栓和虚孔处的主体金属	3
19	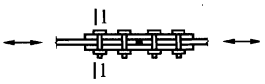	高强度螺栓摩擦型连接处的主体金属	2

注：1　所有对接焊缝及 T 形对接和角接组合焊缝均需焊透。所有焊缝的外形尺寸均应符合现行标准《钢结构焊缝外形尺寸》JB 7949 的规定。

2　角焊缝应符合本规范第 8.2.7 条和 8.2.8 条的要求。

3　项次 16 中的剪应力幅 $\Delta\tau = \tau_{max} - \tau_{min}$，其中 τ_{min} 的正负值为：与 τ_{max} 同方向时，取正值；与 τ_{max} 反方向时，取负值。

4　第 17、18 项中的应力应以净截面面积计算，第 19 项应以毛截面面积计算。

附录 F　桁架节点板在斜腹杆压力作用下的稳定计算

F.0.1　基本假定。

1　图 F.0.1 中 *B-A-C-D* 为节点板失稳时的屈折线，其中$\overline{BA}$平行于弦杆，$\overline{CD}\perp\overline{BA}$。

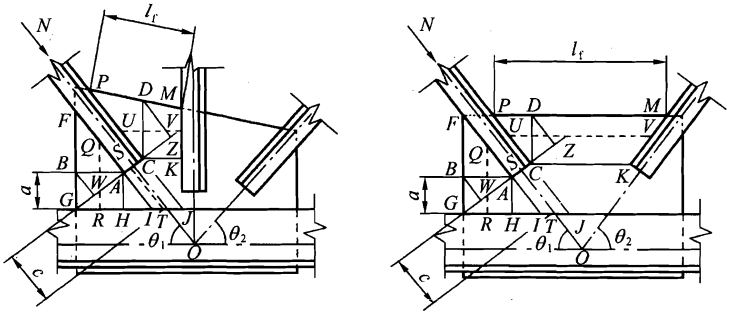

图 F.0.1　节点板稳定计算简图

(a) 有竖杆时；(b) 无竖杆时

2　在斜腹杆轴向压力 N 的作用下，$\overline{BA}$区（*FBGHA* 板件）、$\overline{AC}$区（*AIJC* 板件）和$\overline{CD}$区（*CKMP* 板件）同时受压，当其中某一区先失稳后，其他区即相继失稳，为此要分别计算各区的稳定。

F.0.2　计算方法：

$\overline{BA}$区：

$$\frac{b_1}{(b_1+b_2+b_3)}N\sin\theta_1 \leqslant l_1 t\varphi_1 f \tag{F.0.2-1}$$

$\overline{AC}$区：

$$\frac{b_2}{(b_1+b_2+b_3)}N \leqslant l_2 t\varphi_2 f \tag{F.0.2-2}$$

$\overline{CD}$区：

$$\frac{b_3}{(b_1+b_2+b_3)}N\cos\theta_1 \leqslant l_3 t\varphi_3 f \tag{F.0.2-3}$$

式中　t——节点板厚度；

N——受压斜腹杆的轴向力；

l_1、l_2、l_3——分别为屈折线$\overline{BA}$、$\overline{AC}$、$\overline{CD}$的长度；

φ_1、φ_2、φ_3——各受压区板件的轴心受压稳定系数，可按 b 类截面查取；其相应的长细比分别为：$\lambda_1 = 2.77\dfrac{\overline{QR}}{t}$，$\lambda_2 = 2.77\dfrac{\overline{ST}}{t}$，$\lambda_3 = 2.77\dfrac{\overline{UV}}{t}$，式中$\overline{QR}$、$\overline{ST}$、

$\overline{UV}$ 为$\overline{BA}$、$\overline{AC}$、$\overline{CD}$ 三区受压板件的中线长度；其中 $\overline{ST}=c$；$b_1(\overline{WA})$、$b_2(\overline{AC})$、$b_3(\overline{CZ})$ 为各屈折线段在有效宽度线上的投影长度。

对 $l_f/t > 60\sqrt{235/f_y}$ 且沿自由边加劲的无竖腹杆节点板（l_f 为节点板自由边的长度），亦可用上述方法进行计算，只是仅需验算$\overline{BA}$区和$\overline{AC}$区，而不必验算$\overline{CD}$区。

本规范用词说明

1 为了便于在执行本规范条文时区别对待，对要求严格程度不同的用词说明如下：

1）表示很严格，非这样做不可的用词：

正面词采用“必须”；反面词采用“严禁”。

2）表示严格，在正常情况下均应这样做的用词：

正面词采用“应”；反面词采用“不应”或“不得”。

3）表示允许稍有选择，在条件许可时首先应这样做的用词：

正面词采用“宜”或“可”；反面词采用“不宜”。

2 条文中指定应按其他有关标准、规范执行时，写法为“应按……执行”或“应符合……要求（或规定）”。